Dec. 14, 1948. D. L. JENSEN 2,456,197

CURRYING MACHINE

Filed April 29, 1946 2 Sheets-Sheet 1

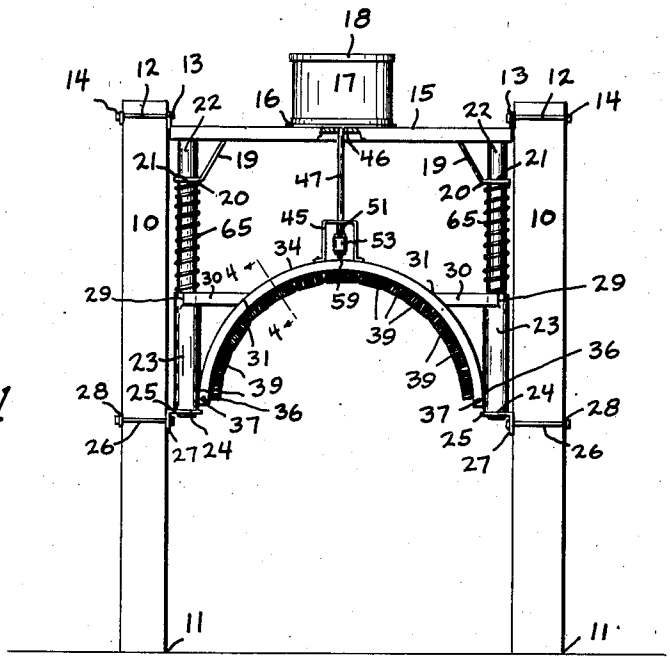

Fig. 1

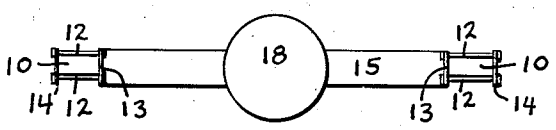

Fig. 2

INVENTOR
Deane L. Jensen

By
Sam J. Slotsky
ATTORNEY

Dec. 14, 1948. D. L. JENSEN 2,456,197

CURRYING MACHINE

Filed April 29, 1946 2 Sheets-Sheet 2

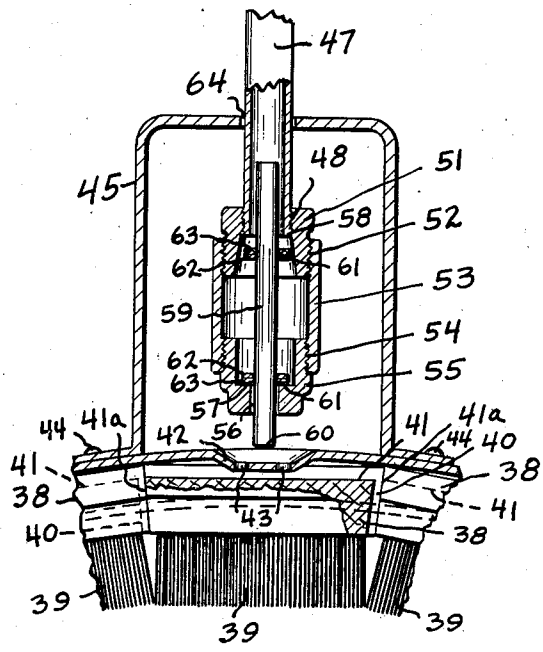

Fig. 3

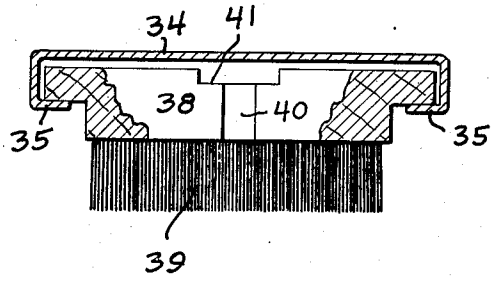

Fig. 4

INVENTOR.
Deane L. Jensen
BY
Sam J. Slotky
ATTORNEY

Patented Dec. 14, 1948

2,456,197

UNITED STATES PATENT OFFICE

2,456,197

CURRYING MACHINE

Deane L. Jensen, Blair, Nebr., assignor to Farnam Company, Omaha, Nebr., a corporation of Nebraska

Application April 29, 1946, Serial No. 665,706

4 Claims. (Cl. 119—157)

1

My invention pertains to a currying or livestock scratching machine.

An object of my invention is to provide a scratching or currying arrangement, which will accommodate creatures of various sizes, which is rugged in construction, and which includes special resilient features to provide the necessary action.

A further object of my invention is to provide a reservoir attached to the arrangement for the purpose of containing a medicating oil therein, with valve means for controlling the oil so that it is automatically deposited on the creatures' backs during the scratching operation, the valve being controlled by the movement of the creatures.

With these and other objects in view, my invention consists in the construction, arrangement, and combination of the various parts of my device, whereby the objects contemplated are attained, as hereinafter more fully set forth, pointed out in my claims, and illustrated in the accompanying drawings, in which:

Figure 1 is a forward elevation of the currying machine,

Figure 2 is a plan view of Figure 1,

Figure 3 is an enlarged detail section, and

Figure 4 is an enlarged sectional detail taken along the lines 4–4 of Figure 1.

I have used the character 10 to designate a pair of vertically positioned posts which are sunk into the ground at 11, and attached to the upper end of the posts 10 by means of the lengthened bolts 12 passing through the ears 13 and the flat washers 14, is a horizontally positioned channel member 15 upon which rests at 16, a cylindrical container 17 having the lid 18.

Attached to the member 15 are a pair of brackets 19 which extend into the flanges 20 which are attached at 21 to the vertically positioned tubes or pipes 22. The pipes 22 are received within a pair of further larger pipes or tubes 23, the pipes 23 normally resting at 24 upon the brackets 25 which brackets are attached by means of the bolts 26 through the flanges 27 and straps 28 to the posts 10. Attached at 29 to the tubes 23 are the braces 30 which are attached at 31 to the arcuate channel member 34 having the inwardly turned lower flanges 35 (see Figure 4). The member 34 is attached at 36 to the tubes 23 and includes the brush retaining bolts 37 at the ends thereof.

Received in the channel member 34 are a series of adjacently positioned brush members having the backs 38 and the bristles 39, the backs 38 including the end grooves 40 communicating with

2

the lengthened centrally arranged channels 41. The ends 41*a* of the backs are tapered as shown so that the assembled brushes will fit snugly, with the channels 41 communicating with each other.

The arcuate channel 34 includes a depression at 42 at the top thereof, the depression including a pair of openings 43 communicating downwardly to the channel and the brushes.

Attached at 44 to the channel 34 is the U-shaped bracket 45 preferably formed of strap material and passing through an opening 46 in the member 15, and attached to the container 17, is a vertical tube 47 which communicates into the container, and threadably attached at 48 (see Figure 3) to the lower end of the tube 47 is the bushing 51 which is threadably engaged at 52 with the cylindrical valve body 53. The valve body 53 is threadably engaged at 54 with the further valve bushing 55. The valve bushing 55 includes an opening at 56 and a valve seat at 57, and the upper bushing 51 includes a valve seat at 58, which is provided by the lower end of the pipe 47.

A vertically positioned slidable rod 59 is received through the opening 56 as well as within the member 53, the lower end 60 of the member 59 being normally positioned slightly above the depressed portion 42. Attached at 61 to the rod 59 are the washers 62, and also attached in a similar manner to the rod 59 are the gasketing members 63 which are snugly adjacent to the members 62. The member 45 includes an opening at 64 for receiving the tube 47.

Receiving the male tubes 22 are a pair of helical compression springs 65 (see Figure 1) which bear against the flanges 20 and the upper ends of the female tubes 23.

The device operates in the following manner. The arcuate member 34 will accommodate hogs or other creatures of different sizes, and it will be noted that the frame work comprising the pipes 23 and the arcuate member 34 will be forced upwardly against the springs 65 when a creature rubs its back against the brushes 39. Normally the valve chamber 53 (see Figure 3) is filled with the medicating oil from the tank 17 since the upper gasketing surfaces 63 are positioned downwardly which allows entrance to the chamber from the pipe 47, the lower gasket surface 63 closing the lower opening 56 thereby maintaining the oil in the chamber 53. When the animal passes under and against the bristles, however, the frame work 34 is carried upwardly which causes the depressed well 42 to abut against the lower end 60 of the rod 59 which causes the oil in the chamber 53 to gravitate through the opening 56 through the

openings 43 into the channel 34, then through the channels and end grooves in the brushes and into the bristles where such oil is then fed onto the creatures' backs. At the same time, the upper gasket 63 will close the pipe 47. Since the container 17 is not attached to the member 15, but to the pipe 47, it will rise when the larger creatures pass against the arcuate member, providing the accommodation for different sized creatures as stated heretofore.

The valve structure thereby provides an arrangement for feeding a quantity of oil downwardly while at the same time closing the upper portion of the oil containing smaller chamber so that the oil need not, therefore, be fed in a continuous stream.

It will be noted that the opening at 64 permits free movement of the member 45 with respect to the valve body.

It will now be noted that I have provided all of the advantages mentioned in the objects of my invention with further advantages being readily apparent.

Some changes may be made in the construction and arrangement of the parts of my invention without departing from the real spirit and purpose of my invention, and it is my intention to cover by my claims any modified forms of structure or use of mechanical equivalents which may be reasonably included within their scope.

I claim as my invention:

1. A currying machine comprising a vertically positioned frame work including side supports, an arcuate brush holding member including a plurality of brushes attached thereto for contacting an animal's back, springs at either side of said arcuate member bearing against said frame work for resiliently maintaining said arcuate member in normal lower position, said arcuate member having vertical female tubes attached thereto, male tubes received in said female tubes, said springs receiving said male tubes and bearing against said female tubes.

2. A currying machine comprising a vertically positioned frame work including side supports, an arcuate brush holding member including a plurality of brushes attached thereto for contacting an animal's back, springs at either side of said arcuate member bearing against said frame work for resiliently maintaining said arcuate member in normal lower position, said arcuate member having vertical female tubes attached thereto, male tubes received in said female tubes, said springs receiving said male tubes and bearing against said female tubes, an oil containing reservoir resting on the top of the frame work including a pipe extending downwardly and communicating to said brushes.

3. A currying machine comprising a vertically positioned frame work including side supports, an arcuate brush holding member including a plurality of brushes attached thereto for contacting an animal's back, springs at either side of said arcuate member bearing against said frame work for resiliently maintaining said arcuate member in normal lower position, said arcuate member having vertical female tubes attached thereto, male tubes received in said female tubes, said springs receiving said male tubes and bearing against said female tubes, an oil containing reservoir resting on the top of the frame work including a pipe extending downwardly and communicating to said brushes, said frame work having an opening for freely receiving said pipe, whereby abutment of an animal against said arcuate member will cause said pipe and reservoir to rise.

4. A currying machine comprising a vertical frame work, an arcuate scratching member slidably mounted with respect to the frame work including brushes attached thereto, an oil containing reservoir resting on the top of the frame work including a pipe extending downwardly and communicating to said brushes, said brushes having tapered ends whereby mounting of said brushes in said arcuate scratching member will cause snug abutment of said ends, said brushes having longitudinal grooves in the backs thereof, end notches communicating with said grooves and the bristles of said brushes, said grooves providing a continuous channel when thus assembled.

DEANE L. JENSEN.

REFERENCES CITED

The following references are of record in the file of this patent:

UNITED STATES PATENTS

Number	Name	Date
785,094	Fribourg	Mar. 21, 1905
1,581,544	Pflaum	Apr. 20, 1926
1,817,449	Vaughan	Aug. 4, 1931
2,216,347	Humbard	Oct. 1, 1940
2,333,946	McQuistan	Nov. 9 1943