Jan. 15, 1935. P. O. OTT 1,988,213

MULTIPLE ROTARY PUMP

Filed Feb. 12, 1931 3 Sheets-Sheet 1

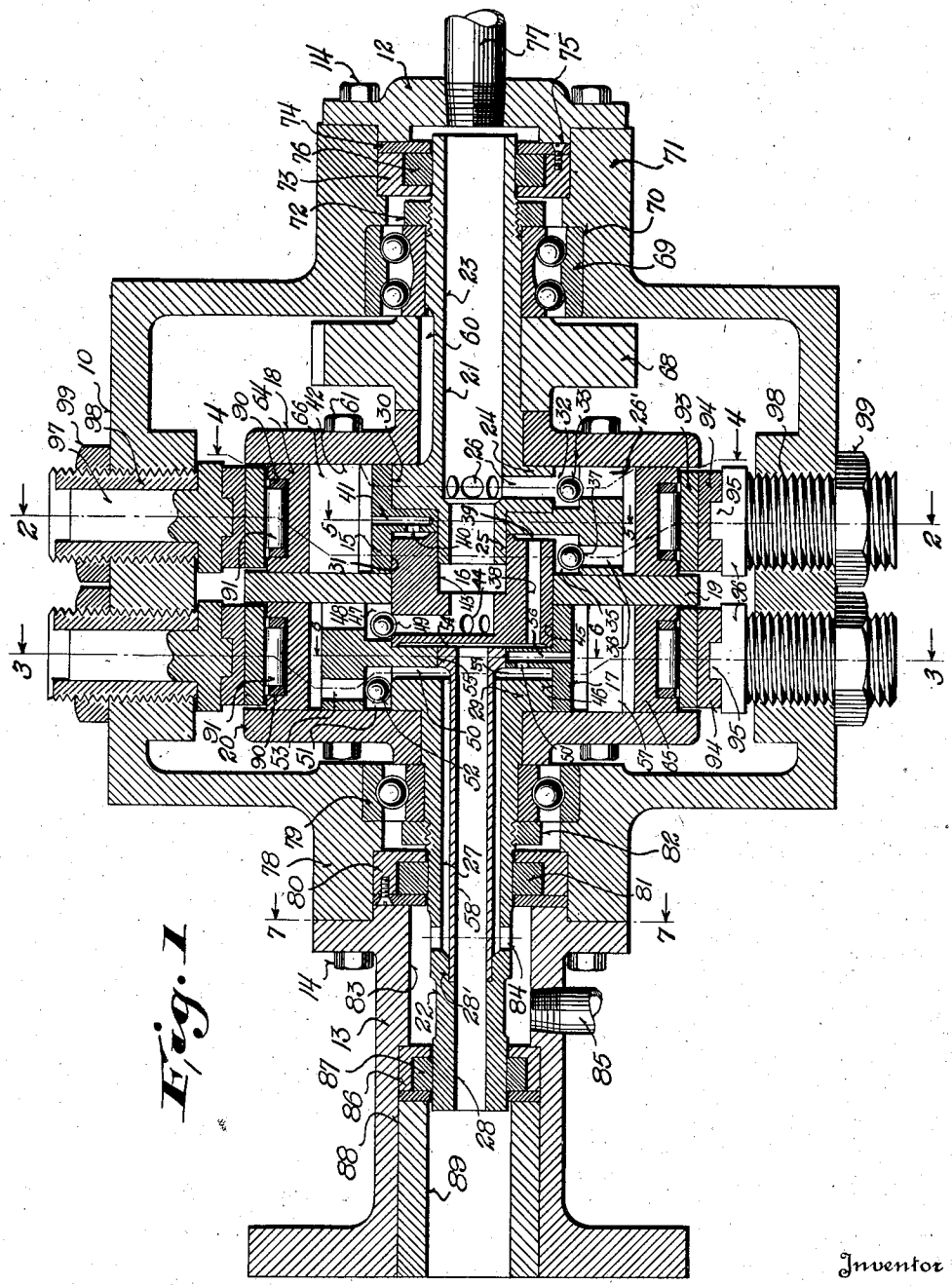

Fig. 1

Inventor

Percy Oliver Ott

By Charles & French

Attorneys

Jan. 15, 1935. P. O. OTT 1,988,213

MULTIPLE ROTARY PUMP

Filed Feb. 12, 1931 3 Sheets-Sheet 2

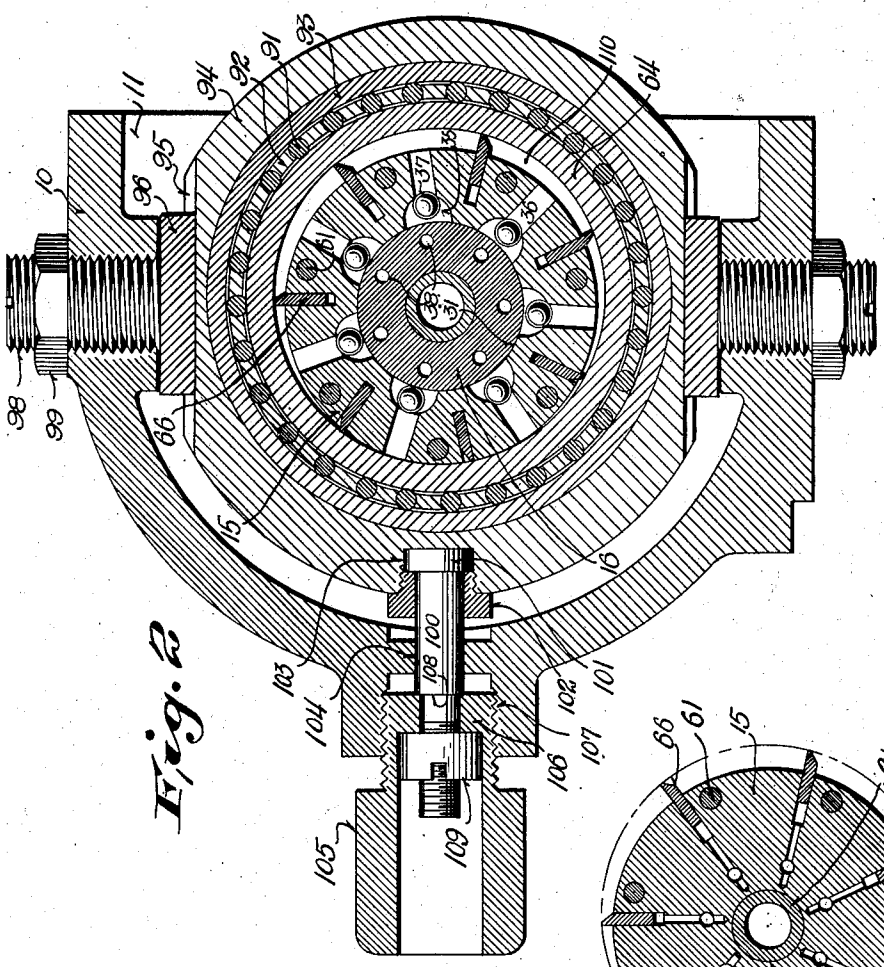

Fig. 2

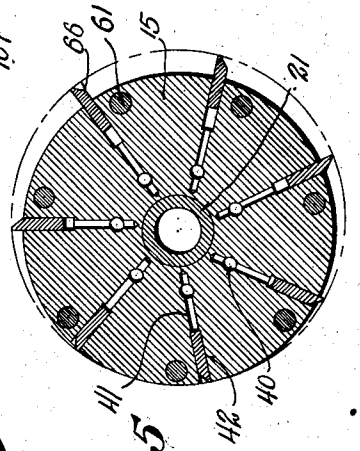

Fig. 5

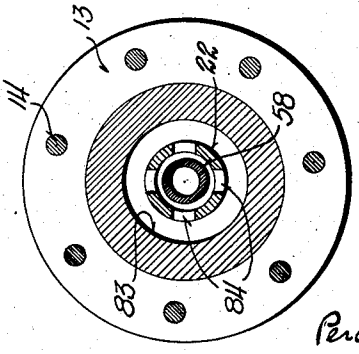

Fig. 1

Inventor

Percy Oliver Ott

By Charles & French

Attorneys

Jan. 15, 1935. P. O. OTT 1,988,213

MULTIPLE ROTARY PUMP

Filed Feb. 12, 1931 3 Sheets-Sheet 3

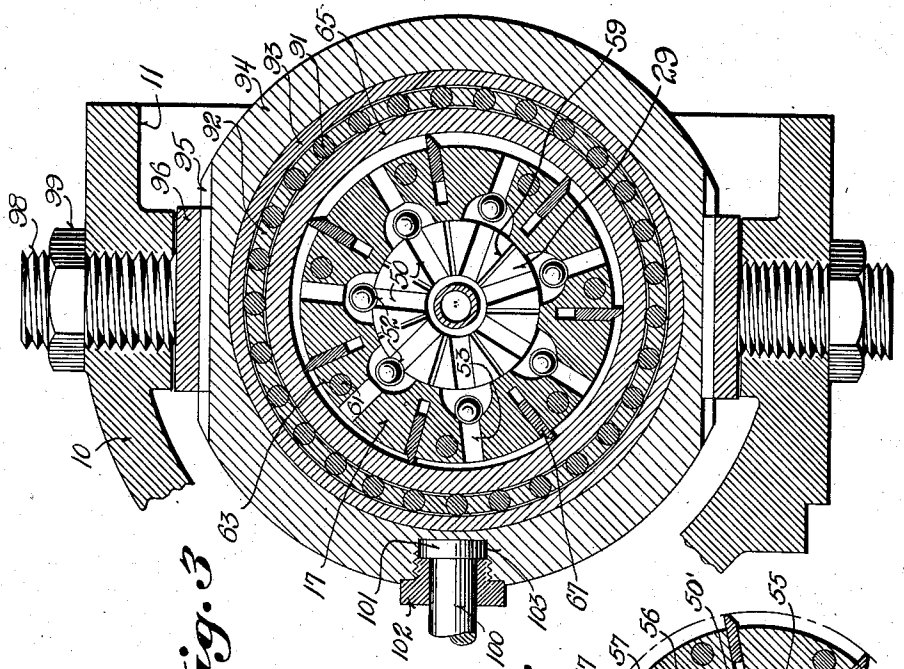

Fig. 3

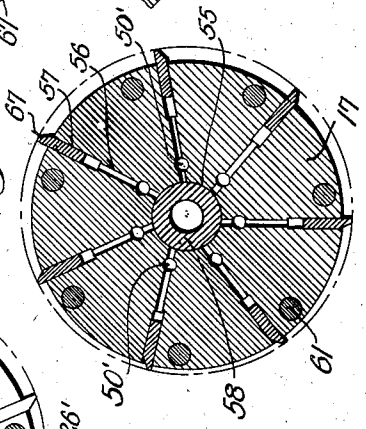

Fig. 6

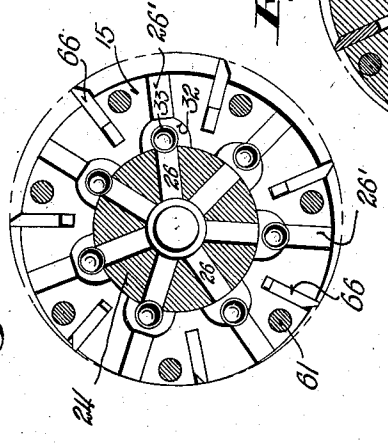

Fig. 4

Inventor

Percy Oliver Ott

By Charles F. French

Attorneys

Patented Jan. 15, 1935 1,988,213

UNITED STATES PATENT OFFICE

1,988,213

MULTIPLE ROTARY PUMP

Percy Oliver Ott, Racine, Wis., assignor to Racine Tool & Machine Company, Racine, Wis., a corporation of Wisconsin

Application February 12, 1931, Serial No. 515,230

6 Claims. (Cl. 103—158)

The invention relates to hydraulic pumps.

The invention has for its object, to provide certain new and useful improvements in vane-type rotary hydraulic pumps whereby two or more pump units may be arranged on a common rotor shaft provided with an inlet for the units and whereby the discharge for these units may be through a common outlet where the units work at the same pressure or may be through separate outlets where it is desired to furnish pressure fluid at different pressures.

A further object of the invention is to provide a multiple pumping unit of the rotary vane-type wherein the discharge passages from the pump units are concentrically arranged in the rotor shaft and include one or more removable tubes so that the units may discharge into the same or different work circuits.

The invention further consists in the several features hereinafter set forth and more particularly defined by claims at the conclusion hereof:

In the drawings, Fig. 1 is a vertical sectional view through a pump embodying the invention;

Fig. 2 is a transverse sectional view taken on the broken line 2—2 of Fig. 1;

Fig. 3 is a view similar to Fig. 2 taken on the broken line 3—3 of Fig. 1;

Fig. 4 is a detail sectional view taken on the line 4—4 of Fig. 1;

Fig. 5 is a detail sectional view taken on the line 5—5 of Fig. 1;

Fig. 6 is a detail sectional view taken on the line 6—6 of Fig. 1;

Fig. 7 is a detail sectional view taken on the line 7—7 of Fig. 1.

Referring to the drawings, the pump includes a main casing 10 open at one side 11 and having end plates 12 and 13 secured thereto by bolts 14.

The rotor includes a main cylindrical body portion formed of parts 15, 16 and 17, side plates 18, 19 and 20 and shaft portions 21 and 22.

The shaft portion 21 has a longitudinally extending bore 23 formed therein and a flange portion 24 adjacent the inner tubular end 25, said flange portion having radially disposed inlet passages 26 connecting the bore 23 with valve controlled inlet passages in the rotor of the first unit.

The shaft portion 22 has a longitudinally extending bore 27 formed therein whose outer end 28 is of reduced diameter and has an annular tube seating recess 28' formed at the inner end of the reduced part 28, said shaft having a flange portion 29 at its inner end.

The main cylindrical body portion 15 is in the form of a ring having a shaft receiving recess 30 in one side and a similar recess 31 in its opposite side. The flange portion 24 of the shaft member 21 has a tight pressed fit in the recess 30 and cooperates with valve receiving recesses 32 alined with the passages 26 to form cages for the inlet valves 33 which seat on the adjacent ends of the inlet passages 26 in said shaft portion 21 and control the flow to inlet slots or passages 26' in the part 15.

The body portion 16 is a cylindrical member of substantially the same diameter as the flange portions 24 and 29 of the shaft portions 21 and 22 and at one end has a tight pressed fit in the recess 31 of the body portion 15 and cooperates with valve-receiving recesses 35 alined with radially disposed discharge passages 36 in said portion 15 to form cages for the discharge valves 37 which seat on the adjacent ends of said passages 36. This body portion 16 also has a series of longitudinally disposed radially arranged discharge passages 38 alined with the recesses 35 and communicating therewith through an annular passage 39 formed by a recess in the outer end of the part 16, which passage also communicates by way of connecting bores 40 and 41 in the part 15 with the blade slots 42 in said part 15. The part 16 also has a centrally disposed bore 43 having a tight or pressed fit with the inner end 25 of the shaft portion 21, which bore communicates with radially disposed bores 44 similar to the bores 26' and forming inlet passages for the second pump unit, these bores being formed in the inner end portion of the part 16 which has a tight pressed fit in a cylindrical recess 45 formed in one side of the part 17.

The part 17 is a cylindrical member in the form of a ring having a shaft receiving recess 46 in its other side in which the flange portion 29 of the shaft member 22 has a tight pressed fit.

Radially disposed valve receiving recesses 47 in the part 17 communicate at one end with similarly disposed inlet slots or ports 48 and at the other with the passages 44 in the part 16 and these parts 16 and 17 cooperate to form cages for the inlet valves 49 for the second unit which valves seat on the adjacent ends of said passages 44, this arrangement being generally similar to the first unit which is shown in detail in Fig. 4.

Referring to Figs. 1 and 3, the end of the flange 29 of shaft 22 has radially disposed grooves 50 formed therein communicating with the bore 27 and with radially disposed valve receiving recesses 51 in the part 17 and these parts cooperate to form valve cages for the discharge valves 52 which seat on the inner ends of discharge ports 53 in the part 15 of the second pump unit.

The end of the part 16 that seats in the part 17 is recessed to provide a chamber or passage 54 that communicates with the discharge passages 38 and with a bore 55 in the part 17 that in turn communicates with the bore 27. This bore 55 has passages 56 leading therefrom to the vane slots 57. Thus it will be noted that this construction provides a common discharge of both units to the

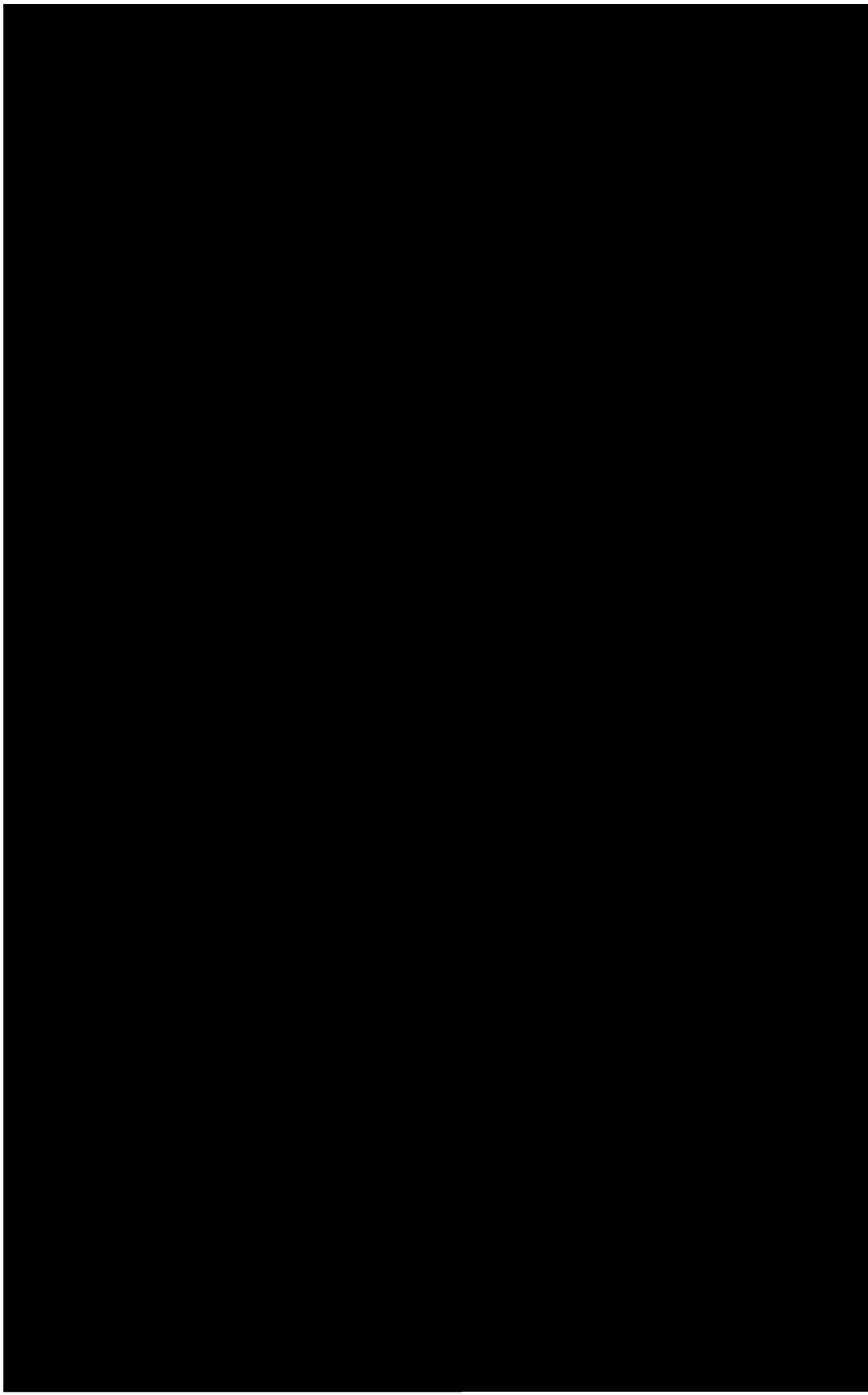

tween them and the rotor and the respective rings 64 and 65 gradually contract and the fluid is discharged from the first unit through the passages 36 past the ball valves 37 and from the second unit through the passages 53 past the ball valves 52. The fluid discharged from the first unit then proceeds by way of chamber 39, passages 38 and chamber 54 into the tube 58, outer end 28 of the shaft 22 and through collar 89 adapted to be connected in any suitable manner to a work circuit. The fluid discharged from the second unit at the same time proceeds by way of passages 50 to the bore 27 of the shaft member 28 and thence through openings 84 to the bore 83 and pipe 85 leading to another work circuit. Thus discharge fluid at different pressures may be furnished by each pumping unit to its respective work circuit. Where it is desired to furnish the discharge fluid from each unit to the same circuit it is only necessary to remove the tube 58 and either plug off the openings for pipe 85 or the opening formed by the collar 89 at the outer end of the end plate 13. It is also to be noted as previously described that the discharge from one or the other of the pump units is used to act on the backs of the blades to hold them against their respective barrels. It is also to be noted that the vanes 66 and 67 do not revolve relative to their barrels 64 and 65 respectively but, by reason of the angular disposition of said vanes relative to said barrels and the fact that the rollers 91 offer no appreciable resistance to their turning that said barrels revolve with the vanes and owing to the fact that the supports 94 for these barrels are eccentrically disposed relative to the axis of the rotor, the blades 66 and 67 move in and out to cooperate with the rotor and barrel to accomplish the pumping action, as described above. Since the travel of the blades or vanes of the units in and out relative to the rotor is dependent upon the eccentricity of the barrels 64 and 65 relative to the rotor, it will be noted that decreasing this eccentricity of the barrel 64 and 65 reduces the volume of liquid handled by the pumping compartments of that unit and finally at zero eccentricity or when the center of revolution of the barrel 64 or 65 coincides with the axis of rotation of the rotor shaft, no displacement by the rotor and no reciprocating movement of the vanes of that unit in which the barrel is so disposed takes place and no liquid will be pumped.

Reference is here made to my copending application, Serial No. 512,367 filed Jan. 30, 1931 for Rotary hydraulic pump as to any features common to that application and this application as that application contains the claim or claims to such common features.

While two rotor units have been shown in the illustrated embodiment it will be apparent that more than two rotor units may be employed if desired following the general arrangement herein shown to provide a common inlet and a joint or separate discharge from each unit, and I therefore desire it to be understood that this invention is not to be limited to any particular arrangement of parts except in so far as such limitations are included in the claims.

What I claim as my invention is:

1. In an hydraulic pump structure, the combination of a plurality of vane-type rotary pumping units, shaft members for supporting said units, one of said shaft members having an inlet connecting with said units for supplying the working fluid thereto, the other of said shaft members have a discharge passage provided with means for connecting with said units for receiving the discharge therefrom collectively or separately.

2. In an hydraulic pump structure, the combination of a plurality of vane-type pumping units, shaft members for supporting said units, one of said shaft members having an inlet connecting with said units for supplying working fluid thereto, the other of said shaft members having concentrically disposed passages connecting respectively with the discharge passage of each unit for receiving the discharge therefrom.

3. In an hydraulic pump structure, the combination of a plurality of rotary vane-type pump units, shaft members for supporting said units, one of said shaft members having an inlet connecting with said units for supplying working fluid thereto, the other of said shaft members having discharge passages including a removable member whereby the discharge from each pumping unit may be conducted through the discharge passages in said shaft or may be conducted through a common passage through said shaft on the removal of said removable member.

4. In an hydraulic pumping structure, the combination of a plurality of rotary pump units, shaft members for supporting said units, one of said shaft members having an inlet connecting with said units for supplying working fluid thereto, the other of said shaft units having parts providing concentrically disposed discharge passages for said respective units, one of said parts being in the form of a removable tube, whose removal provides a common discharge for said units.

5. In a pump structure of the character described, the combination of a plurality of vane-type pumping units having rotor body portions provided with inlet and discharge passages and vanes mounted to work in said body portions, valves controlling said passages, a shaft member secured to one of said body portions and having an inlet passage communicating with the inlet of that body portion, a connecting member secured to both of said portions and having an inlet passage for the second unit and a discharge passage for the first unit, and a shaft member secured to the other of said body portions and adapted to receive the discharge from the first unit and from said connecting member.

6. In a pump structure of the character described, the combination of a plurality of vane-type rotary pump units arranged in juxtaposition, each of said units including a movable outer barrel, a rotor body, vanes working in said body and against said barrel and dividing each unit into a plurality of pumping compartments, and means for controlling the passage of working fluid through the rotor body to and from said pumping compartments, means for adjusting the eccentricity of each barrel to vary the pumping capacity of each unit, a common inlet for said units, and a discharge means for said units adapted for receiving the common or separate discharge from said units.

PERCY OLIVER OTT.