R. CERERO.

TESTING-MACHINES.

No. 194,129. Patented Aug. 14, 1877.

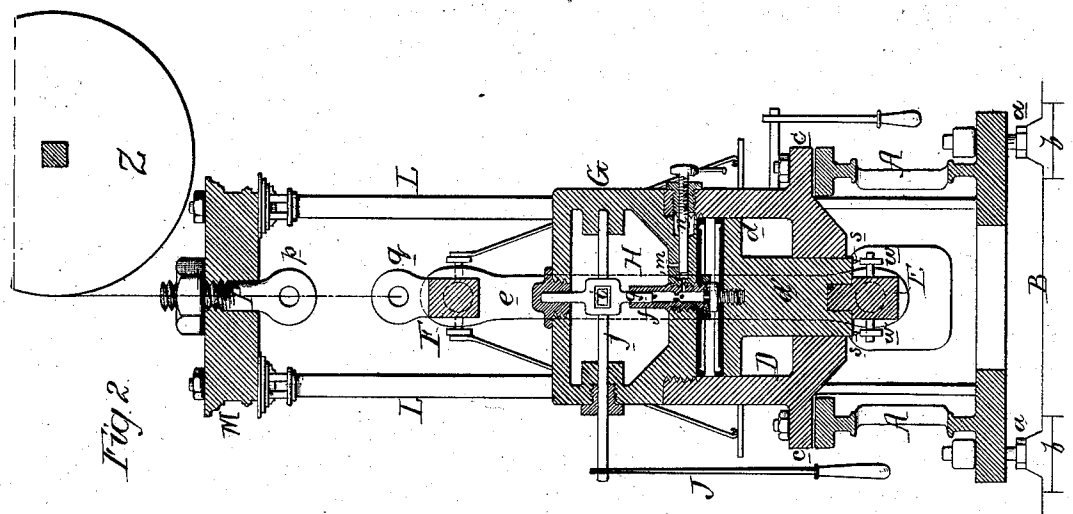

Fig. 2

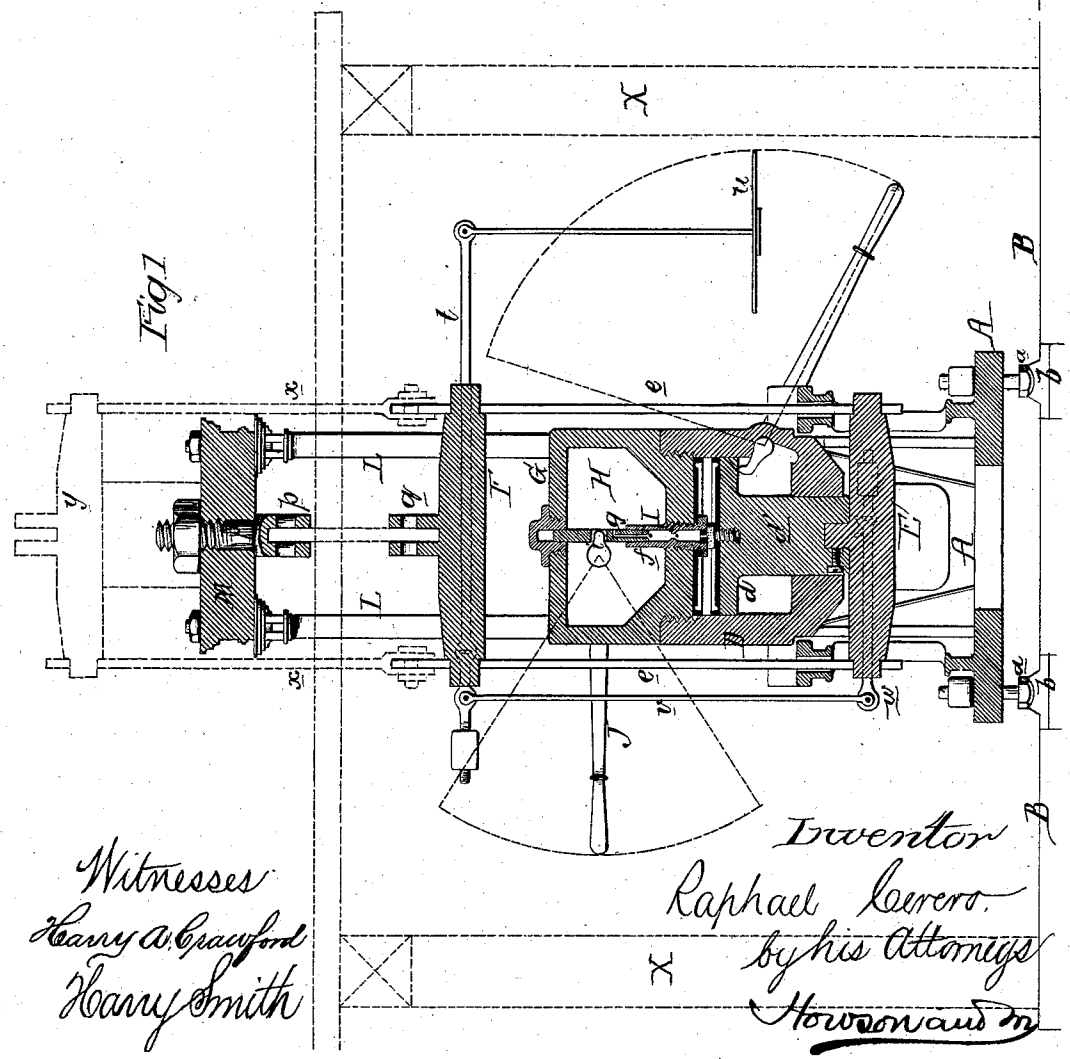

Fig. 1

Witnesses
Harry A. Crawford
Harry Smith

Inventor
Raphael Cerero.
by his Attorneys
Howson and Sons

N. PETERS, PHOTO-LITHOGRAPHER, WASHINGTON, D. C.

UNITED STATES PATENT OFFICE.

RAPHAEL CERERO, OF HAVANA, CUBA.

IMPROVEMENT IN TESTING-MACHINES.

Specification forming part of Letters Patent No. **194,129**, dated August 14, 1877; application filed May 1, 1877.

To all whom it may concern:

Be it known that I, RAPHAEL CERERO, of Havana, Cuba, have invented a new and useful Improvement in Apparatus for Testing the Strength of Materials, of which the following is a specification:

My invention relates to certain improvements in hydraulic apparatus for testing the resistance of materials; and the object of my invention is to construct a cheap and compact machine of this class which can be used to determine resistance to either tension, compression, deflection, or torsion. This object I attain in the manner which I will now proceed to describe, reference being had to the accompanying drawing, in which—

Figure 1 is a longitudinal vertical section of my improved hydraulic testing apparatus, and Fig. 2 a transverse section of the same.

The base of the machine consists of a heavy metal plate, A, supported at the corners upon screws *a*, the heads of which are made convex, and are adapted to concave recesses in blocks *b*, secured to the foundation B of the machine. By operating these screws, the proper adjustment of the machine can always be insured when the foundation itself is uneven.

To the top of the base A is bolted a flange, *c*, at the lower end of a hydraulic cylinder, D, to which is adapted a piston, *d*, having a rod, *d'*, which extends through the lower end of the cylinder, and is connected below the same to a cross-head, E, provided at each end with bars *e*, which extend through openings in the frame A, and are connected above to a cross-head, F, similar to the cross-head E.

The head G of the cylinder D is made hollow, and the chamber H, which it incloses, is utilized as a reservoir for containing water for the pump I. This pump is located in the center of the chamber H, and consists of a barrel, *f*, communicating with the interior of the cylinder D, and furnished with a suitable check-valve, and with a piston, *g*, which is adapted to the pump-barrel, and is tubular at its lower end, thus forming a passage closed at the lower end by a check-valve, and communicating at its upper end with the chamber H of the cylinder-head G.

The piston *g* is operated by an arm, *i*, upon a shaft, *j*, one end of which extends through one side of the head G, and is provided with a lever, J.

A similar device to that just described is arranged at the lower portion of the cylinder D, below the piston *d*, and serves to restore said piston to its normal or elevated position after it has been depressed. The water above the piston in this case takes its course through a passage, *m*, which extends from the lower portion of the pump below the check-valve to the bottom of the chamber H, this passage being closed, under ordinary circumstances, by a screw-valve, *n*.

From the base of the apparatus extend four columns, L, supporting an entablature, M, to which is secured a bolt, P, having at the lower end an eye, *p*, a similar eye, *q*, being formed on the cross-head F.

Hung to the upper cross-head F is a lever, *t*, the long arm of which carries a plate, *u*, while its short arm is connected by means of a rod, *v*, to the long arm of a lever, *w*, hung to the lower cross-head E, and bearing, at a point close to the pivot, upon lugs *s* projecting from the end of the piston-rod *d'*.

This device is intended to test the accuracy of the usual gage employed in connection with the press by applying said gage to the upper cross-head F, and then placing suitable weights on the plate *u*. This causes a downward movement of the cross-heads, and this movement is registered by the gage, so that by comparing the record of the gage with the known amount of downward pressure which the weights on the plate *u* exert upon the cross-heads, the accuracy of the gage can be readily determined.

The mode of ascertaining the resistance to tension by the above apparatus is as follows: One end of the article to be tested is firmly secured to the eye *p* of the bolt P, and the other end to the eye *q* of the cross-head F. Upon operating the press the article will be stretched, the degree of resistance being registered by the gage.

In determining the resistance of material to deflection, the opposite ends of the bar or strip are rested upon stout trestles X X, placed at

a proper distance apart, and the eye *q* of the cross-head F is connected in any suitable manner to the center of the strip.

The degree of deflection can be ascertained by any suitable instrument.

In determining resistance to compression, supplementary bars *x* are secured to the upper ends of the bars *e* above the cross-head F, these bars extending to a point above the entablature M, and being there furnished with a cross-head, *y*. The article to be tested is thus compressed between said cross-head *y* and the upper surface of the entablature M, the central bolt P of which had been previously removed. The resistance of the article to compression may be ascertained by the same instrument which recorded the resistance to tension.

In determining resistance to torsion, a wheel, Z, is firmly secured to the rod or bar to be tested, and to the periphery of this wheel is securely fastened one end of a rope or chain, the opposite end of which passes down through the opening in the entablature M, (the bolt P having been removed,) and is secured to the eye *q* of the cross-head P.

The extent of torsion will be governed partly by the pressure upon the piston of the cylinder D and partly by the diameter of the wheel Z. The angle of torsion may be ascertained by means of a graduated index on the wheel Z.

The above-described testing-machine, owing to its compactness, simplicity, and economy, and to the different classes of work to which it is applicable, is especially adapted to the wants of builders and contractors, as it can be readily transported from place to place, and can thus be used at the spot where building operations are being carried on.

I claim as my invention—

1. The combination of the piston of a hydraulic press with two cross-heads connected together by bars, and with the entablature supported on columns independent of the press, as set forth.

2. The combination of the cross-head F and its eye *q* with the entablature M and its bolt P, having an eye, *p*.

3. The combination of the cylinder D with the head G, its water-chamber H, and pump I.

4. The combination of the cross-heads E and F, and their levers *t* and *w*, with the lugs *s*, rod *v*, and plate *u*.

5. The combination of the hollow cylinder-head G and its pump I with the shaft *j*, its arm *i*, and operating-lever J, as described.

6. The combination of the cylinder, the pump-barrel, and its check-valve, with the passage *m* and valve *n*.

7. The combination of the base A and its bolts *a*, with rounded heads, with the foundation B, as specified.

In testimony whereof I have signed my name to this specification in the presence of two subscribing witnesses.

RAPHAEL CERERO.

Witnesses:
I. N. SCHMIDT,
JOS. RAPHEE.