May 29, 1962 S. CARLSSON 3,037,081

VENTED ENCLOSURE TYPE LOUDSPEAKER SYSTEM PROVIDING IMPROVED LOW FREQUENCY RESPONSE

Filed Sept. 27, 1954

FIG. 1.

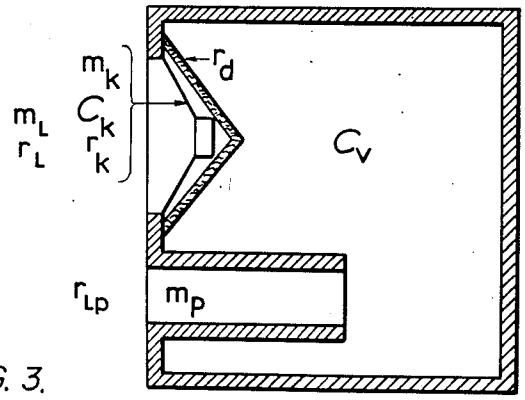

FIG. 3.

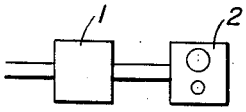

FIG. 2.

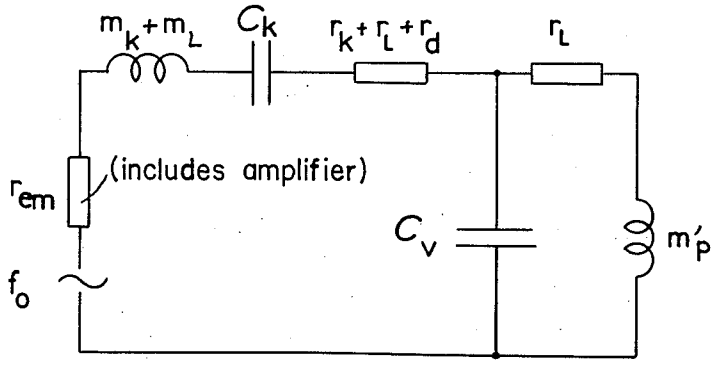

Sty Carlsson

United States Patent Office

3,037,081

Patented May 29, 1962

1

3,037,081

VENTED ENCLOSURE TYPE LOUDSPEAKER SYSTEM PROVIDING IMPROVED LOW FREQUENCY RESPONSE

Stig Carlsson, Holbergsgatan 168I, Stockholm, Sweden

Filed Sept. 27, 1954, Ser. No. 458,651
Claims priority, application Sweden Oct. 2, 1953
13 Claims. (Cl. 179—1)

The present invention relates to loudspeaker and loudspeaker enclosure, wherein the loudspeaker enclosure is an acoustic resonator of small dimensions, being well controlled by the loudspeaker mechanism.

It is known, that it is difficult to provide a high quality loudspeaker reproduction of the lowest audio frequencies; so far the attempts have resulted in large, bulky loudspeakers. Due to their size and high price such loudspeakers have got a limited market. Furthermore, several types of large loudspeaker enclosures have insufficiently controlled resonances, causing an unsatisfactory reproduction of transients.

It is an object of the present invention to provide a loudspeaker of small dimensions, which at low frequencies has a smooth frequency response curve, good transient response and low non-linear distortion.

Another object of the invention is to provide an inexpensive loudspeaker, which at low frequencies has a smooth frequency response curve, good transient response and low non-linear distortion.

Still another object of the invention is to obtain the two aims above without affecting the response of the loudspeaker mechanism for medium and high audio frequencies.

The subjects of the invention are the design dimensions of the enclosure of the loudspeaker, and the amount of resistive damping introduced to the motion of the loudspeaker diaphragm.

In accordance with the invention the enclosure of the loudspeaker is an acoustic resonator (Helmholz resonator), the diaphragm of the loudspeaker mechanism forming a part of the wall of the resonator. The enclosure of the loudspeaker according to the invention differs from the ordinary bass reflex enclosures by being much smaller and having an equivalent mechanical resistance, larger than usual, in series with the mass of the loudspeaker diaphragm in the equivalent mechanical circuit. The loudspeaker mechanism may for instance be an ordinary moving coil direct radiator loudspeaker mechanism.

The objects and aspects of the invention will be apparent to those skilled in the art from the following more detailed description, which is generally applicable to resonator enclosures, covering ordinary bass reflex enclosures as well as the resonator enclosure according to the invention. The description includes the appended drawing wherein:

FIG. 1 is a symbolic sectional view of a loudspeaker according to the present invention. The resistance r_d (defined below) relates to one of the alternative designs. In other designs of the invention $r_d=0$. With $r_d=0$ the figure also covers the ordinary bass reflex loudspeaker.

FIG. 2 is the equivalent low frequency mechanical circuit of FIG. 1, reduced to the moving members of the loudspeaker mechanism.

FIG. 3 is a diagrammatic representation of the system

2

showing an amplifier **1**, connected to a loudspeaker **2** of the vented enclosure type shown in FIG. 1.

The symbols of the figures indicate:

r_{em}=the resistance of the equivalent mechanical generator.

Example: When using a moving coil loudspeaker mechanism we have

$$r_{em}=\frac{B^2l^2}{r_e}$$

where:

B=flux density in the air gap of the loudspeaker mechanism

l=length of the voice coil conductor in the flux B

r_e=the sum of the electrical resistance of the voice coil and the effective electrical output resistance of the amplifier

m_k=the mass of the moving members of the loudspeaker mechanism

C_k=the mechanical compliance of the suspension system of m_k

r_k=the mechanical resistance due to the friction in C_k

m_L=the mass of the air load on the diaphragm of the loudspeaker mechanism

r_L=the mechanical radiation resistance of the diaphragm (negligible compared to other impedances)

r_d=the equivalent mechanical resistance due to a layer of acoustic absorbing material (e.g. rockwool) covering the back of the loudspeaker mechanism

$C_V=\frac{V}{\rho\cdot c^2\cdot S_k^2}$=the mechanical compliance of the air volume of the enclosure

where:

V=inside volume of the enclosure

ρ=density of air

c=velocity of sound

S_k=effective area of the diaphragm

$m_p=m_p'\cdot\frac{S_p^2}{S_k^2}$=the sum of the air load on the port of the resonator duct and the equivalent mass of the air inside the duct, reduced to the port

where S_p=effective cross-sectional area of the duct at the port

$r_{Lp}=r_L\cdot\frac{S_p^2}{S_k^2}$=the mechanical radiation resistance of the port

m_p' is the load that m_p exerts upon the diaphragm of the loudspeaker mechanism.

The mechanical circuit in FIG. 2 has two series resonant frequncies f_1 and f_3 and one parallel resonant frequency f_2; f_2 is the resonant frequency of the enclosure:

$$f_2=\frac{1}{2\pi\sqrt{m_p'\cdot C_V}}$$

The sequence of the resonant frequencies is: $f_1<f_2<f_3$.

In order to systematize resonator enclosure design a new symbol will be introduced, called volume parameter v:

$$v=\frac{m_k+m_L}{m_p'}=\frac{m_k+m_L}{m_p}\cdot\frac{S_p^2}{S_k^2}$$

The volume parameter v is proportional to the enclosure volume V when the loudspeaker mechanism and the resonant frequency f_2 are given.

Using the volume parameter v to characterize bass reflex and other types of resonator enclosure designs and published design principles, it has been found that their volume parameters v are never less than 1.0, and usually have values between 1 and 2.

The effect of the volume parameter v is that a decrease of the parameter v raises the resonant frequency f_3, increases the acoustic efficiency at f_3, and decreases the acoustic efficiency at f_2. If a loudspeaker mechanism with customary efficiency is used the decreasing of the parameter v to a small value makes the acoustic efficiency at f_2 so small compared to the efficiency at f_3, that the resonator may seem inoperative. This is why small values of the volume parameter v have not been considered appropriate.

According to the present invention, the volume parameter v, and hence the volume of the enclosure, is reduced from the value used so far to a fraction of it, and the equivalent mechanical damping resistance in series with the loudspeaker diaphragm in the equivalent mechanical circuit is substantially increased. The inventor has found that said damping resistance controls, in a certain manner, the acoustic efficiency of the loudspeaker at the frequency f_3 but does not noticeably influence the efficiency at the frequency f_2. Thus an appropriately chosen resistance provides a loudspeaker having a smooth, or smoothly sloped, frequency response curve at low audio frequencies down to f_2.

The essential of the present invention is the combination of a low value of the volume parameter v of the loudspeaker, v less than 0.8, and arrangements to increase the equivalent mechanical resistance in series with the loudspeaker diaphragm in the equivalent mechanical circuit of the loudspeaker.

The following are some examples of methods to increase said equivalent mechanical resistance:

(1) A layer of acoustic absorbing material mounted as r_d in FIGS. 1 and 2 between the diaphragm of the loudspeaker mechanism and the resonator volume,

(2) The loudspeaker is fed from an amplifier having a negative internal output impedance,

(3) A loudspeaker mechanism of very high efficiency is used.

Of these methods the two first are clearly defined, while the third requires further definition. It may be stated that the loudspeaker has been made according to the present invention, if Q_0^3 is less than

$$\frac{1}{v}$$

when v is less than 0.8,

where Q_0 is the ratio at resonance between the positive equivalent mechanical reactance and the equivalent mechanical series resistance of the loudspeaker driven by its proposed amplifier and having its resonator port closed.

This limiting value of Q_0 corresponds to the loudspeaker mechanism having a Q-value of about 0.75 when mounted in a large baffle and connected to an amplifier having zero internal output impedance. At the present state of loudspeaker manufacture a lower Q-value means that the loudspeaker mechanism has an efficiency higher than usual or is equipped with an unusual damping device.

The invention is not restricted to a complete loudspeaker construction but it also relates to a separate enclosure designed to make part of a loudspeaker according to the invention.

Without limiting the claims in any way, some details about the design according to the invention will be given:

The resonant frequency of the enclosure should coincide with that of the loudspeaker mechanism:

$$\frac{1}{2\pi\sqrt{m_p'\cdot C_V}}=\frac{1}{2\pi\sqrt{(m_k+m_L)\cdot C_k}}$$

The inventor has found the parameter values v from 0.2 to 0.5 to be of special interest. The value $v=0.3$ has been used by the inventor in a number of loudspeakers of very good performance.

As an example of low audio frequency response curves obtainable, it will be mentioned that the loudspeaker may be given a low audio frequency response curve, down to f_2, close to the voltage frequency response curve developed across the resistance in a voltage fed series circuit of a resistance and a capacitance. In this case the damping resistance is to be chosen to give

$$Q_0=\frac{1+v}{\sqrt{4+\frac{1}{v}+7v}}$$

A frequency response curve of this type is easily compensated in the amplifier in order to get a flat resulting low audio frequency response curve down to f_2.

Without limiting the claims in any way, the performance of loudspeakers having resonator enclosures will be illustrated, as a function of the volume parameter v, by results from theoretical investigations:

(1) The efficiency at the frequency f_2:

The free field pressure response of the loudspeaker for the frequency f_2 is equal to v times the free field pressure response for low medium frequencies, if the resistive losses of the resonator elements are low, which they were in the experimental loudspeakers according to the invention.

(2) Transient response:

Low Q-values Q_2 and Q_3 of the equivalent mechanical circuit of the loudspeaker at the resonant frequencies f_2 and f_3 are essential for good transient response. When the resonator is tuned to the resonant frequency of the loudspeaker mechanism, and the resistive losses of the resonator elements are negligible, then

$$Q_2\cdot Q_3=\sqrt{0.5v+v^2+\sqrt{0.25v^2+v^3}}$$

Hence small values of the parameter v, i.e. small enclosures, make possible better transient response than higher values of v. Furthermore, enclosures of small dimensions are easier to make rigid enough to avoid disturbing resonances of the walls of the enclosure.

Without limiting the claims in any way, the low nonlinear distortion of the loudspeaker according to the invention will be illustrated by results from measurements of two loudspeakers, both having $v=0.3$ and fitted with a layer of acoustic absorption material covering the back of the loudspeaker mechanism. The distortion of the driving amplifier was negligible, and its internal output impedance was close to zero. In both cases a quite ordinary loudspeaker mechanism was used, but the compliance C_k was somewhat increased.

Loudspeaker 1

A 6.5" loudspeaker mechanism was mounted in an enclosure having a resonator volume of 8 dm.^{3} (outside dimensions: a cube 24 x 24 x 24 cm.^{3}); the resonator was tuned to $f_2=70$ c.p.s. Measured in an anechoic room the loudspeaker produced 5% harmonics when the sound intensity 1 meter from the loudspeaker was

at 60 c.p.s. 78 db above 10^{-16} W./cm.^{2}
80 c.p.s. 90 db above 10^{-16} W./cm.^{2}
110 c.p.s. 95 db above 10^{-16} W./cm.^{2}

Measurements identical with this were carried out with the same loudspeaker mechanism mounted in three other types of enclosures, the first two being the above enclosure, but altered. All sound intensity values relate to those above.

(*a*) With the resonator port closed and the damping r_d removed, i.e. with the loudspeaker mechanism mounted in a very small closed cabinet enclosure, the sound intensity values for 5% harmonics were 13–18 db lower.

(*b*) Furthermore, the back wall of the enclosure was removed; i.e. with the loudspeaker mechanism mounted in a small open-back cabinet, used so far in ordinary radio sets, the second intensity values for 5% harmonics were 15–25 db lower.

(*c*) With the above loudspeaker mechanism mounted in a very large closed cabinet enclosure (inside volume 140 dm.^{3}), lined with acoustic absorption material, the sound intensity values for 5% harmonics were 5–9 db lower.

Loudspeaker 2

A 10″ loudspeaker mechanism was mounted in an enclosure with a resonator volume of 52 dm.^{3}; the resonator was tuned to f_2=38 c.p.s. Measured in a free field corner the loudspeaker produced 3% harmonics at 30 c.p.s. when the sound intensity 2 meters from the loudspeaker was 93 db above 10^{-16} W./cm.^{2}. The same result was obtained with the damping r_d substituted by a corresponding amount of damping achieved by a negative internal output impedance of the driving amplifier.

Having thus described my invention, what I claim is:

1. In a sound reproducing device, means forming a single acoustic resonator with at least one port, at least one electrically actuated vibratory air actuator disposed as part of the wall of said acoustic resonator, the internal volume of said acoustic resonator being so small as to represent a greater stiffness to said vibratory air actuator than the suspension system of said vibratory air actuator, the dimensions of said port being such as to make the air in said port and the air load thereon represent a greater mass to said vibratory air actuator than the vibratory mass of said vibratory air actuator and the air load thereon, an amplifier driving said vibratory air actuator, means making the equivalent mechanical series resistance of said vibratory air actuator greater than the reactance of the vibratory mass of said vibratory air actuator and the air load thereon at resonance when said port is closed.

2. The invention as set forth in claim 1, wherein the dimensions of said port make the air in said port and the air load thereon represent a mass to said vibratory air actuator that is at least 25 percent greater than the vibratory mass of said vibratory air actuator and the air load thereon.

3. The invention as set forth in claim 1, wherein the dimensions of said port make the air in said port and the air load thereon represent a mass to said vibratory air actuator that is at least twice the vibratory mass of said vibratory air actuator and the air load thereon.

4. In a sound reproducing device, means forming a single acoustic resonator with at least one port, at least one electrically actuated vibratory air actuator disposed as part of the wall of said acoustic resonator, the internal volume of said acoustic resonator being so small as to represent a greater stiffness to said vibratory air actuator than the suspension system of said vibratory air actuator, the dimensions of said port being such as to make the air in said port and the air load thereon represent a greater mass to said vibratory air actuator than the vibratory mass of said vibratory air actuator and the air load thereon, an amplifier having a negative internal output impedance driving said vibratory air actuator.

5. The invention as set forth in claim 4 wherein the dimensions of said port make the air in said port and the air load thereon represent a mass to said vibratory air actuator that is at least 25 percent greater than the vibratory mass of said vibratory air actuator and the air load thereon.

6. The invention as set forth in claim 4, wherein the dimensions of said port make the air in said port and the air load thereon represent a mass to said vibratory air actuator that is at least twice the vibratory mass of said vibratory air actuator and the air load thereon.

7. Loudspeaker system comprising means forming a single acoustic resonator with at least one port, at least one electrically actuated vibratory air actuator disposed as part of the wall of said acoustic resonator, the internal volume of said acoustic resonator being so small as to represent a greater stiffness to said vibratory air actuator than the suspension system of said vibratory air actuator, the dimensions of said port being such as to make the air in said port and the air load thereon represent a greater mass to said vibratory air actuator than the vibratory mass of said vibratory air actuator and the air load thereon, means making the equivalent mechanical series resistance of said vibratory air actuator greater than the reactance of the vibratory mass of said vibratory air actuator and the air load thereon at resonance when said port is closed and said vibratory air actuator is driven by an amplifier whose internal output impedance is close to zero.

8. Loudspeaker system as claimed in claim 7 wherein the dimensions of said port make the air in said port and the air load thereon represent a mass to said vibratory air actuator that is at least 25 percent greater than the vibratory mass of said vibratory air actuator and the air load thereon.

9. Loudspeaker system as claimed in claim 7 wherein the dimensions of said port make the air in said port and the air load thereon represent a mass to said vibratory air actuator that is at least twice the vibratory mass of said vibratory air actuator and the air load thereon.

10. Loudspeaker system comprising means forming an acoustic resonator with at least one port, at least one electrically actuated vibratory air actuator disposed as part of the wall of said acoustic resonator, the internal volume of said acoustic resonator being so small as to represent a greater stiffness to said vibratory air actuator than the suspension system of said vibratory air actuator, the dimensions of said port being such as to make the air in said port and the air load thereon represent a greater mass to said vibratory air actuator than the vibratory mass of said vibratory air actuator and the air load thereon, means providing an acoustical damping resistance between said vibratory air actuator and the interior of said acoustic resonator and located immediately adjacent said vibratory air actuator.

11. Loudspeaker system as claimed in claim 10 wherein the dimensions of said port make the air in said port and the air load thereon represent a mass to said vibratory air actuator that is at least 25 percent greater than the vibratory mass of said vibratory air actuator and the air load thereon.

12. Loudspeaker system as claimed in claim 10 wherein the dimensions of said port make the air in said port and the air load thereon represent a mass to said vibratory air actuator that is at least twice the vibratory mass of said vibratory air actuator and the air load thereon.

13. A sound reproducing device comprising an enclosure forming an acoustic resonator, said enclosure including a port in the form of a duct, one wall of said enclosure providing a baffle for the mounting of a loud speaker, a loud speaker mounted on said baffle and having a diaphragm forming a part of the wall of said enclosure, and a layer of acoustic absorbing material mounted on said baffle and closely surrounding said loud speaker to totally enclose the back of same so as to provide an acoustic damping resistance between said diaphragm and said duct without materially reducing the volume of said resonator.

(References on following page)

References Cited in the file of this patent

UNITED STATES PATENTS

2,217,279 Karns ..... Oct. 1, 1940
2,766,839 Baruch et al. ..... May 20, 1954

FOREIGN PATENTS

1,065,126 France ..... May 20, 1954

OTHER REFERENCES

"Audio Engineering," May 1948, page 29, "Vented Loudspeaker Enclosures."

Shorter: "Loudspeaker Cabinet Design," Wireless World, vol. 56 November-December 1950, pp. 382-385 and 436–438.

Snitzer: "Adventures with a Bass Reflex," Audio Engineering, January 1954, pp. 26 and 49–51.