Aug. 11, 1936. F. G. CHAPIN 2,050,521

ALARM APPARATUS

Filed Nov. 19, 1934

Fig. 1.

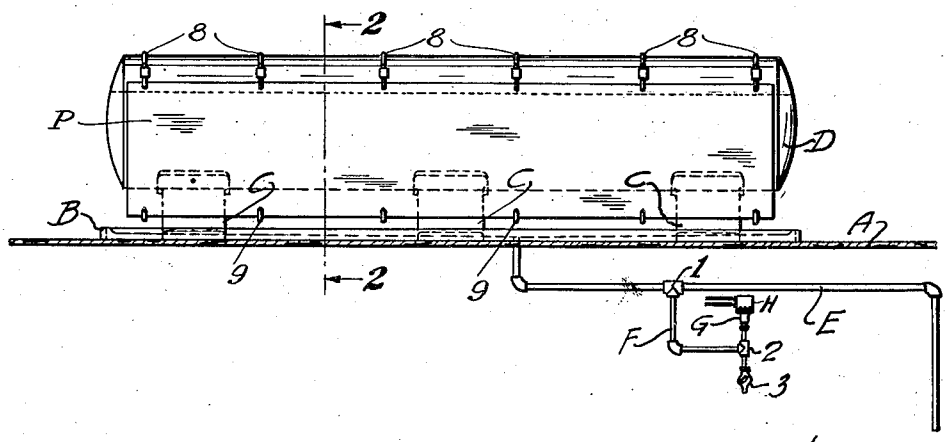

Fig. 2.

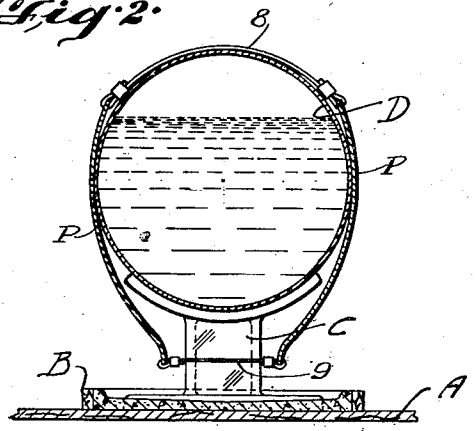

Fig. 3.

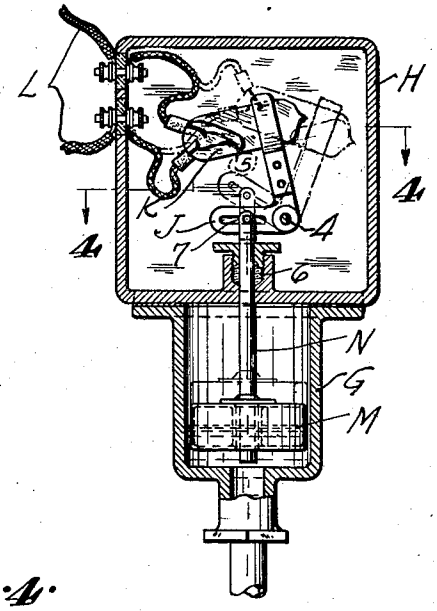

Fig. 4.

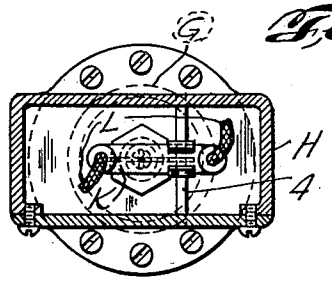

INVENTOR
Fenton G. Chapin.
BY Ralph Reed
ATTORNEY

Patented Aug. 11, 1936 2,050,521

UNITED STATES PATENT OFFICE

2,050,521

ALARM APPARATUS

Fenton G. Chapin, Richmond Heights, Mo., assignor of one-tenth to Walter A. Thum, St. Louis, Mo.

Application November 19, 1934, Serial No. 753,615

1 Claim. (Cl. 137—21)

This invention relates generally to alarm apparatus.

Building fire alarm systems, especially of the so-called wet type, usually comprise a water or other fluid storage-tank generally disposed in a top floor of the particular building. Frequently, such tanks, from one cause or another, become leaky, with the result that the leakage, until discovered, more or less seriously damages the building and its contents.

My present invention pertains more particularly to an alarm apparatus for protecting the building and its contents from such damage and has for its chief object the provision of an apparatus which is relatively simple and inexpensive in structure, which may be readily installed in the building, and which is automatically actuable on tank-leakage for giving or sounding an alarm calling repair-attention thereto.

And with the above and other objects in view, my invention resides in the novel features of form, construction, arrangement, and combination of parts presently described and pointed out in the claim.

In the accompanying drawing,—

Figure 1 is an elevational view of an alarm apparatus embodying my present invention;

Figure 2 is an enlarged transverse sectional view of the apparatus taken approximately on the lines 2—2, Figure 1;

Figure 3 is an enlarged sectional view of the electrical switch and actuating member forming part of the apparatus; and

Figure 4 is a sectional-plan view taken approximately on the line 4—4, Figure 3.

Referring now more in detail and by reference characters to the drawing, which illustrates a practical embodiment of my invention, A designates a floor of a building, disposed flatwise on which is a preferably cementitious or other drain-basin B, upstanding from which are suitably spaced pedestals C supporting over the basin B the water or other fluid storage-tank D of any standard fire alarm apparatus.

Leading from the basin B to any suitable place of discharge, is a pipe-conduit or the like E, and connected, as by a T-coupling 1 in the line E, is a branch-conduit F leading, as by a second T-coupling 2, to a well G equipped with a normally closed pet-cock or the like 3.

Suitably joined to or mounted in operative relation with the well G, is a switch-housing H, and pivotally mounted, as at 4, in the housing H, is a bell-crank lever J, suitably mounted upon or fixed to one arm of which is a switch-member preferably in the form of a mercury-container K adapted normally for circuit-closing connection with the contacts or terminals 5 included in any suitable electric alarm circuit as by lines L leading into the housing H, as best seen in Figure 3.

Working in the well G, is a float M having a stem N working, in turn, through a suitable stuffing box 6 and having slot-and-pin connection, as at 7, with the other arm of the bell-crank lever J, as also best seen in Figure 3.

Secured, as by connecting straps 8, 9, in embracing relation about the tank D, are elongated transversely arcuate plates P having the contour in section best seen in Figure 2 and forming a shield for directing any fluid leaking or escaping from the tank D on to the drain-basin B, from which such leakage-fluid flows into the conduit E to place of discharge.

However, in practice, a portion of such leakage-fluid will flow through the branch-pipe F into the well G, causing the float M to correspondingly rise and thereby, in turn, shift the lever J and switch-member K, as shown by dot-dash lines in Figure 3, automatically effecting a breaking of the normally closed circuit and sounding an appropriate alarm, not shown.

Thus in a simple, but effective manner, not only is the building protected from damage resulting from storage tank leakage, but also attention is automatically called to the fact of such leakage, so that prompt repair may be made.

The apparatus has been found exceedingly efficient in the performance of its intended functions, and it is to be understood that changes in the form, construction, arrangement, and combination of the several parts of the apparatus may be made and substituted for those herein shown and described without departing from the nature and principle of my invention.

Having thus described my invention, what I claim and desired to secure by Letters Patent is,—

An alarm apparatus including, in combination with a fluid storage-tank and a drain-basin spaced from and under the tank, of a shield comprising a pair of longitudinally elongated plates arcuate in lateral section disposed in opposed relation upon opposite sides and exteriorly of the tank, said plates at their upper and lower margins being spaced one from the other, and straps connected to the plates at their said upper and lower margins and disposed transversely of the tank for securing the plates in embracing relation about the tank, the plates at their lower margin projecting intermediate the tank and basin.

FENTON G. CHAPIN.