United States Patent [19]

Taylor et al.

[11] **3,777,214**

[45] **Dec. 4, 1973**

[54] **METHOD AND APPARATUS FOR ELECTROSTATICALLY CHARGING PARTICLES FOR PRINTING OR COATING**

[75] Inventors: **James R. A. Taylor,** Chicago; **William A. Chambers,** Harvey, both of Ill.

[73] Assignee: **Continental Can Company, Inc.,** New York, N.Y.

[22] Filed: **Nov. 26, 1971**

[21] Appl. No.: **202,373**

Related U.S. Application Data

[62] Division of Ser. No. 787,977, Dec. 30, 1968, Pat. No. 3,635,157.

[52] **U.S. Cl.**..... **317/3,** 101/DIG. 13, 317/262 R, 101/114

[51] **Int. Cl.**..... **B41f 9/00,** B05b 5/00

[58] **Field of Search** ..... 250/49.5 ZC; 317/4, 317/262; 101/DIG. 13

[56] **References Cited**

UNITED STATES PATENTS

2,777,957	1/1957	Walkup	250/49.5 ZC
3,295,440	1/1967	Rarey et al.	101/DIG. 13
3,364,853	1/1968	Fisher et al.	101/DIG. 13
3,370,212	2/1968	Frank	250/49.5 ZC
3,370,529	2/1968	Michalchik	101/DIG. 13
3,382,796	5/1968	Javorik et al.	101/DIG. 13
3,527,941	9/1970	Culhane et al.	250/49.5 ZC
3,635,157	1/1972	Taylor et al.	101/114
2,778,946	1/1957	Mayo	250/49.5 ZC

Primary Examiner—Edgar S. Burr
Attorney—Charles E. Brown et al.

[57] **ABSTRACT**

Provisions for electrostatically charging particles, as in an electrostatic printing operation, include a corona source for providing ionization in a predetermined region, a plate electrode spaced from the corona source, a grid electrode adjacent the corona source and spaced from the plate electrode and a nozzle for directing a flow of the finely divided particles intermediate the plate and grid electrodes. The grid electrode draws ions from the corona source into the region intermediate the plate and grid electrodes. A rotatable drum may be provided proximate the region of electrostatic charging of the particles to receive the particles on the surface thereof for transportation to a printing or application zone. Alternatively, a stencil screen may be provided proximate the region of charging of the particles to direct passage of the particles therethrough to define a desired image upon a substrate proximate the stencil screen.

6 Claims, 3 Drawing Figures

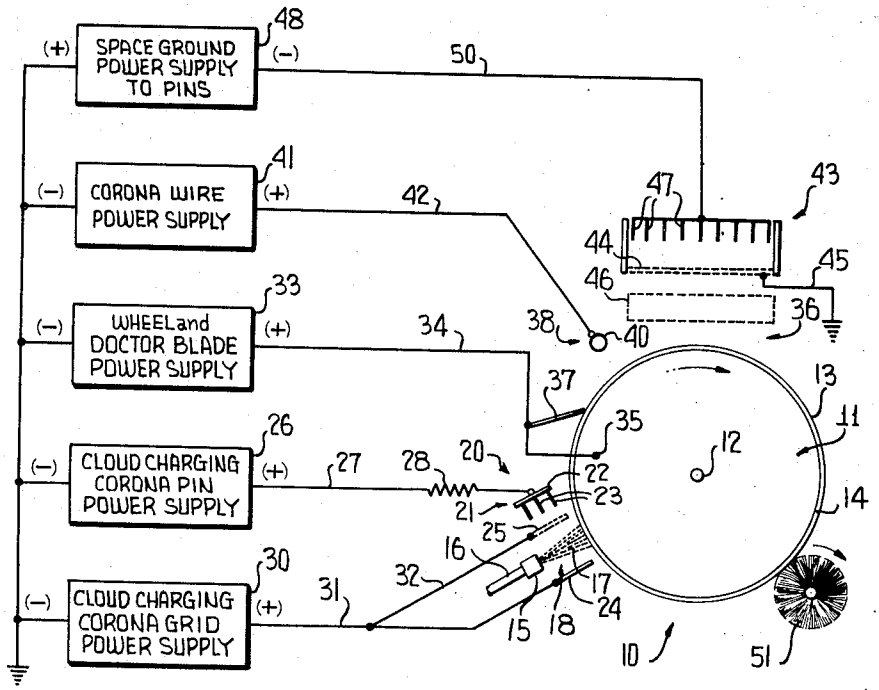

FIG. 1

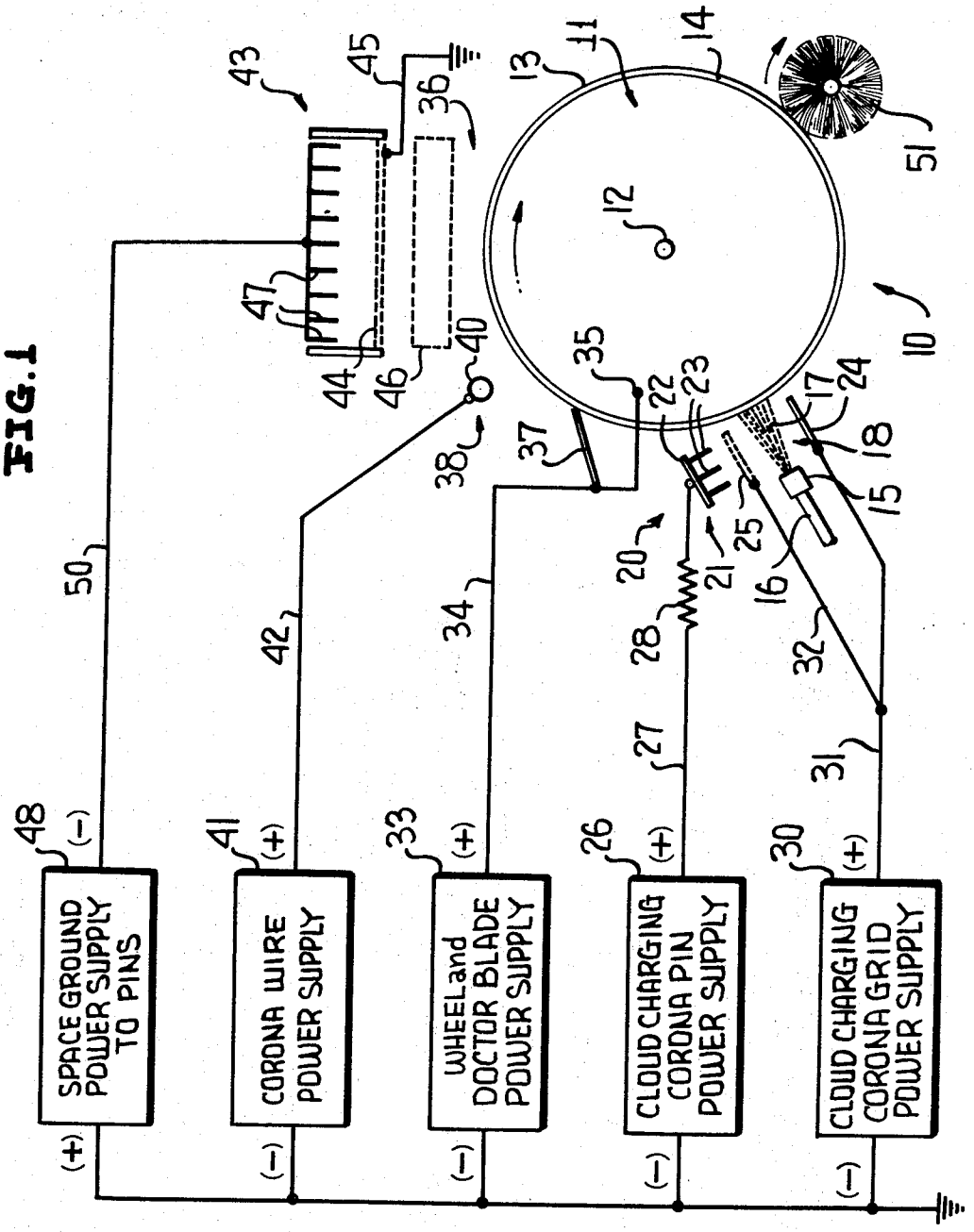

INVENTORS
JAMES R. A. TAYLOR &
WILLIAM A. CHAMBERS

ATTORNEYS

FIG. 2

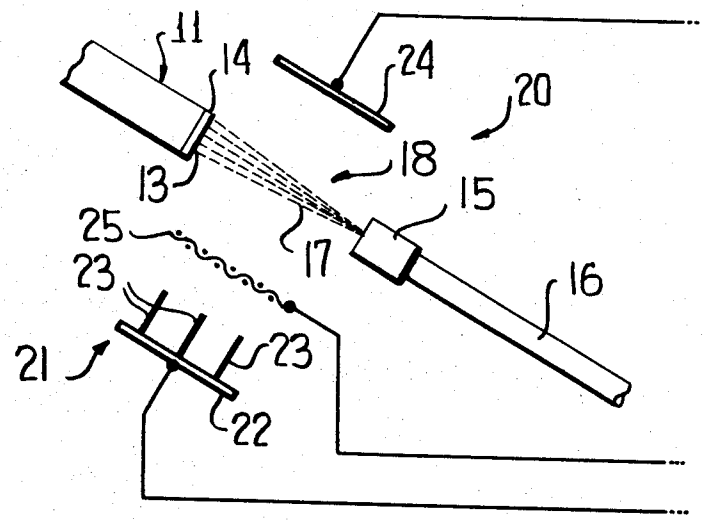

FIG. 3

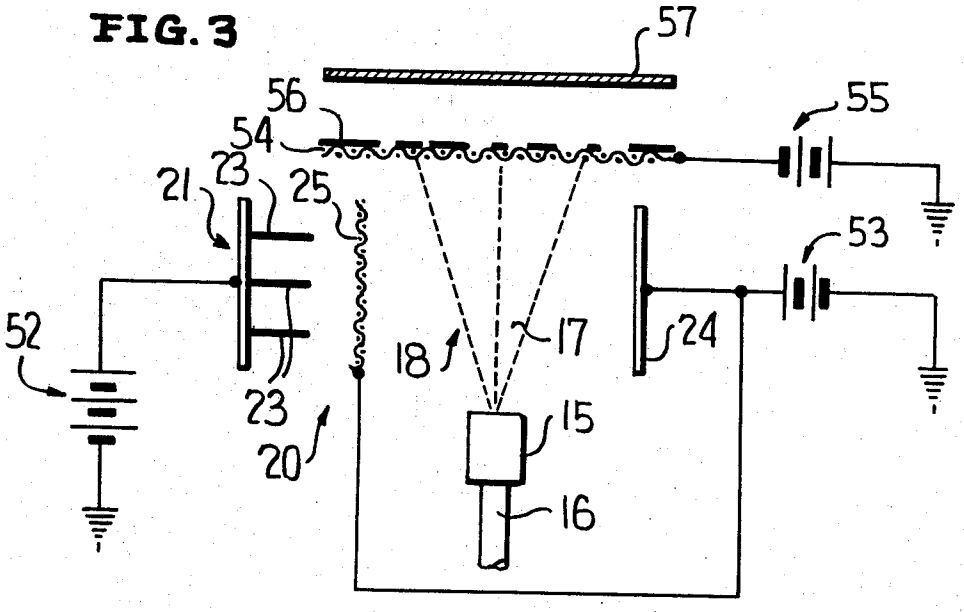

INVENTORS
JAMES R. A. TAYLOR &
WILLIAM A. CHAMBERS

Dillon, Brown, Ramik & Holt
ATTORNEYS

METHOD AND APPARATUS FOR ELECTROSTATICALLY CHARGING PARTICLES FOR PRINTING OR COATING

This is a division of Ser. No. 787,977, filed Dec. 30, 1968 and now U.S. Pat. No. 3,635,157.

This invention relates generally to methods and apparatus for electrostatically charging particles and more specifically to methods and apparatus for electrostatically charging particles of printing medium for employment in an electrostatic printing or coating operation.

The employment of a corona source for electrostatically charging toner or printing medium particles in an electrostatic printing or coating operation has previously been known. However, previously known methods and apparatus for charging particles through the employment of a corona source have often been characterized by a failure to apply a consistent charge upon a predetermined quantity of particles, resulting in the production of an insufficient charge upon a portion of the quantity of particles intended for use in a printing or coating operation. Similarly, previously known methods and apparatus have failed to provide a precisely determined region of ionization, allowing the charging of particles in that region to provide a known, controlled and uniform electrostatic charge upon particles passing through such region.

In view of the foregoing, it is a primary object of this invention to provide improved methods and apparatus for electrostatically charging finely divided particles through the employment of a corona source.

Another object of this invention is to provide apparatus for electrostatically charging finely divided particles including a corona source, a plate electrode and a grid electrode, wherein the plate and grid electrodes define an a region therebetween into which ions are drawn and maintained.

A further object of this invention is to provide apparatus in accordance with the immediately foregoing object of this invention wherein the grid electrode has applied thereto a potential chosen to draw produced ions into the region between the plate and grid electrodes and wherein a potential is applied to the plate electrode preventing passage of ions therepast.

Additionally, it is an object of this invention to provide methods and apparatus for consistently charging a quantity of finely divided particles of printing medium for application to aprinting drum having an image-producing intaglio surface thereon and for withdrawing charge particles from the drum to effect production of a predetermined image upon a substrate.

Yet another object of this invention is to provide methods and apparatus for uniformly charging a quantity of finely divided particles of printing medium and for directing passage of such particles through a stencil screen and onto a substrate proximate the screen, the stencil screen limiting passage of such particles to define a predetermined image upon the substrate.

These and further objects of this invention will be more clearly understood by reference to the following written description, the attached drawings referred to therein and the appended claims.

IN THE DRAWINGS:

FIG. 1 is a diagrammatic illustration of printing or coating apparatus formed in accordance with this invention and illustrates provisions for the application of an electrostatic charge to toner particles in transit therethrough, a rotatable printing drum for receiving

charged toner particles and for transporting the charged particles to an application or printing area.

FIG. 2 is an enlarged diagrammatic illustration of the provisions of FIG. 1 for electrostatically charging toner particles and shows a corona source proximate a grid electrode for drawing produced ions therepast and a plate electrode, cooperating with the grid electrode to maintain ions intermediate the plate and grid electrode during passage of toner particles intermediate such electrodes.

FIG. 3 is a diagrammatic illustration of a further embodiment of this invention and shows a corona source, a grid electrode and a plate electrode similar to those shown in FIG. 2 and a stencil screen electrode masked to define a desired image to be produced upon a proximate substrate.

Referring to the drawings in detail, there is illustrated in FIG. 1 an electrostatic printing or coating apparatus, generally referred to by the numeral **10,** including a rotatable printing wheel or drum **11,** mounted for rotation by a centrally provided shaft **12.** Rotation of the drum **11** may be provided by the employment of a number of suitable or conventional and known driving provisions (not shown). The drum **11** includes a metallic peripheral surface **13** which may be provided by a relatively thin printing plate **14,** relieved in the fashion of an intaglio printing plate to provide etched or engraved areas defining a desired image.

Mounted adjacent the peripheral surface **13** of the drum **11** is a nozzle **15** terminating a supply line **16** communicating with a source of toner or printing medium particles, not separately shown. The supply line **16** and nozzle **15** provide a flow of fluidized or aerated toner particles toward the metallic peripheral surface **13** of the drum **11.** The nozzle **15,** terminating the line **16,** is spaced slightly from the peripheral surface **13** of the drum **11** allowing free passage of a flow of toner **17** through an a region **18** intermediate the nozzle **16** and surface **13.**

Particle charging provisions, generally referred to by the numeral **20** are provided adjacent the peripheral surace **13** of the drum **11** for the production of an electrostatic charge upon the toner or printing medium particles in transit through the region **18.** The particle charging provisions **20** include a corona source **21** defined by a conductive plate **22** having affixed thereto a pluraltiy of pin electrodes **23.** Additionally, a plate electrode **24** and a grid electrode **25,** best illustrated in FIG. **2,** form a part of the particle charging provisions **20** and the plate electrode **24** is spaced from the corona source **21** on the opposite side of the flow of toner **17** in the area **18.** The grid electrode **25** is located adjacent the corona source **21** and spaced from the plate electrode **24** to define between the plate electrode **24** and the grid electrode **25** the region **18** in which charging of the printing medium or toner particles is effected.

Application of an electrostatic charge to the toner particles in transit to the peripheral surface **13** of the wheel or drum **11** is effected by application of a potential to the corona source **21** from a high-voltage D.C. power supply **26,** via a conductor **27** and current limiting resistor **28** to produce ionization in the area adjacent the corona pin electrodes **23.** The plate and grid electrodes **24** and **25,** respectively, are energized from a further high-voltage D.C. power supply **30** via a pair of conductors **31** and **32.** The potential at which the electrodes **24** and **25** are energized is of the same polar-

ity but less than the potential at which the corona source **21** is energized. Accordingly, an electric field is produced intermediate the corona source **21** and the grid electrode **25**, drawing produced ions toward and through the grid electrode **25**. The grid electrode **25** preferably is formed of metallic screen or mesh as illustrated in FIG. **2** and allows the free passage of ions therethrough into the area **18** intermediate the plate electrode **24** and the grid **25**. Energization of the plate electrode **24** at a potential equal to the potential applied to the grid electrode prevents passage of a substantial portion of the produced ions therepast, thus maintaining substantial ionization in the region **18** intermediate the two spaced electrodes **24** and **25**.

The metallic peripheral surface **13** of the drum **11** is energized from a further D.C. power supply **33** via a conductor **34** and a brush or other suitably selected connector **35** as best seen in FIG. **1**. The potential applied to the drum **11** is of the same polarity as the potentials applied to the corona source **21** and the electrodes **24** and **25**. The potential applied to the drum **11** is, however, less than the potential applied to the electrodes **24** and **25**, thus developing a further electric field between the electrodes **24** and **25** and the peripheral surface **13** of the drum **11**. The polarity of the charge electrostatically applied to the toner particles in the region **18** will, of course, correspond to the polarity of the ions produced by the corona source **21** and the polarity of energization of that source. Accordingly, energization of the peripheral surface **13** of the drum **11** at a potential lower than the potential applied to the electrodes **24** and **25** urges movement of the relatively highly charged toner particles into engagement with the intaglio printing surface provided upon the drum **11**.

Rotation of the drum **11** in the direction of the unnumbered arrow shown in FIG. **1** effects movement of the applied charged particles toward a printing zone or area **36**. A metallic doctor blade **37** engages the peripheral surface **13**, scraping the uppermost surfaces of the intaglio surface to remove charged toner particles therefrom. The doctor blade **37** is energized from the power supply **33** at a potential equal to the potential applied to the drum **11**, thus minimizing decay of the charge on the toner particles upon the drum **11** through contact of the drum **11** and the doctor blade **37**.

An auxiliary corona source **38** is mounted proximate the surface **13** of the drum **11** and is circumferentially spaced from the doctor blade **37** in the direction of rotation of the drum. The auxiliary corona source may include a wire **40**, energized at a relatively high potential from an additional D.C. power supply **41** via a conductor **42**. The auxiliary corona source **38** replenishes the charge on the toner particles deposited upon the peripheral surface **13** of the drum **11** prior to movement of the charged particles into the printing or application area **36**.

Spaced from the drum **11** in the printing area **36** is a space grounding corona source generally indicated by the numeral **43**. The space grounding corona source **43** includes a mesh or screen electrode **44** which is grounded with respect to the potential applied to the surface **13** of the drum **11** as indicated at **45**. In the printing area **36**, charged particles carried on the surface of the drum **11** will be drawn toward the grounded screen electrode **44** to produce a desired image upon a substrate **46** located intermediate the screen electrode **44** and the surface of the drum **11**.

The space grounding corona source **43** includes a plurality of corona pin electrodes **47** energized from a D.C. supply **48** via a conductor **50**. The potential applied to the pin electrodes **47** is opposite in polarity to the charge upon the toner particles applied to the substrate **46** and upon deposition of charged toner particles upon the undersurface of the substrate **46**, ions produced adjacent the pin electrodes **47** will be drawn through the screen electrode **44** to the upper surface of the substrate **46**, effectively neutralizing the charge upon the substrate **46**. This, then, prevents repulsion of charged particles from the substrate **46** once the substrate is moved from within the field extending between the grounded screen electrode **44** and the positively energized surface **13** of the drum **11**.

In an operative embodiment of the apparatus illustrated in FIG. **1**, a positive potential of 13 to 14 KV may be applied to the pin electrodes **23** of the corona source **21** while a positive potential of 8 to 10 KV may be applied to each of the plate and grid electrodes **24** and **25**, respectively. The metallic surface **13** of the printing drum **11** may be energized at from 4 to 6 KV which is sufficiently low to allow attraction of the charged particles in the region **18** while allowing withdrawal of the particles in the printing area **36**, under the influence of the grounded screen electrode **44**. Attention should be given to the potential at which the auxiliary corona source **38** is energized as well as to the spacing of the source **38** from the periphery **13** of the printing drum **11** in order to assure corona production without discharge to the surface of the drum, while preventing attraction of charged particles to the wire **40** of the auxiliary source **38**. In the preferred arrangement discussed herein a positive potential of 6 to 12 KV may be applied to the wire **40** to effect replenishment of the toner particle charge. Effective neutralization of the substrate **46** is effected by the application of a negative potential of from 7.5 to 8.5 KV to the pin electrodes **47** for the production of negative ions adjacent thereto.

As illustrated in FIG. **1**, complete cleansing of the peripheral surface **13** of the drum **11** following a printing operation may be provided by a rotary brush **51** driven in opposition to the movement of the drum as indicated by the unnumbered arrow associated therewith in FIG. **1**. The brush **51** preferably contacts the peripheral surface **13** at a point circumferentially spaced from the printing area **36** to allow application of newly charged toner particles to the surface **13** for further printing operations.

Whereas employment of the power supplies **26**, **30**, **33**, **41** and **48** with the polarities indicated in FIG. **1** provides successful charging and printing with nonconductive toner or printing medium particles, preferably the polarities illustrated are employed with powders of materials having a known naturally positive charge balance for consistent charging of the particles in the region **18** and where powders known to have a naturally negative charge balance or negative charging propensity are employed, complete reversal of the polarities illustrated in FIG. **1** and discussed hereinabove is preferred.

FIG. **3** illustrates a further embodiment of the invention employing the charging provisions **20** discussed hereinabove with respect to FIGS. **1** and **2** and including the corona source **21**, the plate electrode **24** and

the grid electrode **25** in substantially the same relationship as discussed hereinabove. Again the nozzle **15** and supply line **16** open adjacent the area **18** intermediate the electrodes **24** and **25** to provide a cloud-like flow **17** of finely divided particles in the region **18.** The corona source **21** is energized from a D.C. supply **52,** applying a positive potential to the corona pin electrodes **23** and the electrodes **24** and **25** are energized from a D.C. supply **53,** applying a lesser positive potential thereto. A stencil screen electrode **54** is negatively energized from a D.C. supply **55,** drawing postiively charged toner or printing medium particles thereto and masking provisions **56,** defining a desired image are provided upon the stencil screen electrode **54,** limiting the passage of toner particles therethrough for application to a substrate **57** to print thereon the desired predetermined image. It will, of course, be apparent that the establishment of an electric field in the region of the stencil screen **54** and the substrate **57** to draw the charged particles toward the substrate **57** may be effected in any convenient fashion and, of course, space grounding corona provisions similar to those provisions **43** illustrated in FIG. **1** may be provided adjacent the substrate **57** to provide drawing of charged toner into contact with the substrate **57** and to effectively neutralize the substrate **57** prior to its removal from the printing area in the embodiment illustrated in FIG. **3.**

While preferred methods and apparatus have been described hereinabove, it will be readily apparent that variations may be made therein without departure from the scope and spirit of the invention embodied in such methods and apparatus.

We claim:

1. Electrostatic apparatus for charging a plurality of finely divided particles including corona source means for the production of ions, a plate electrode having a first potential and spaced from said corona source means, a grid electrode having the same potential of like polarity with respect to said plate electrode and adjacent said corona source means and spaced from said plate electrode for drawing ions from said corona source means for passage to the region between said grid electrode and said plate electrode and for maintaining ions in said region, said corona source means being a direct current source, and means directing finely divided particles between said grid electrode and plate electrode for charging said particles in said region therebetween.

2. Apparatus according to claim **1** wherein said means for directing finely divided particles between said grid electrode and plate electrode comprises a nozzle opening into said area for directing a cloud of particles therethrough.

3. Apparatus according to claim **1** wherein said corona source means comprises ionizing electrode means having a relatively high potential of the same polarity and higher than the potential of the grid electrode and the plate electrode, said grid electrode comprising a metallic screen, whereby ions are drawn through said screen and into the region between said grid electrode and said plate electrode.

4. The method of applying a charge to finely divided particles including the steps of providing a direct current corona source, locating a plate electrode spaced from the corona source, locating a grid electrode between the corona source and the plate electrode and spaced from the plate electrode, energizing the corona source for producing ions of a predetermined polarity, applying eual potentials of the predetermined polarity to the grid and plate electrodes for maintaining the produced ions therebetween, and directing a flow of particles intermediate the plate electrode and grid electrode for charging said particles by the produced ions.

5. The method according to claim **4** wherein the step of providing a corona source includes providing at least one corona needle and said step of energizing the corona source includes applying a potential to the at least one needle higher than and of the same polarity as the potentials applied to the grid and plate electrodes for drawing the produced ions through the grid electrodes into the region intermediate the grid and plate electrodes.

6. The method according to claim **4** further including the steps of locating a further member in the path of flow of particles and outside the region between the grid and plate electrodes, and applying to said further member a potential to aid withdrawal of charged particles from the region intermediate the grid and plate electrodes.

* * * * *