W. M. SCHOLL.

SHOE HEEL RETAINING GRIP.

APPLICATION FILED MAR. 20, 1915.

1,174,619. Patented Mar. 7, 1916.

Fig. 1.

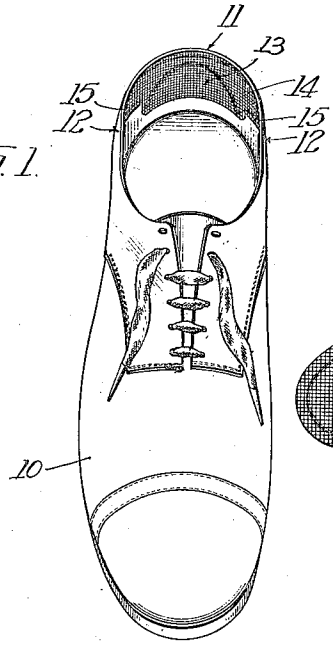

Fig. 3.

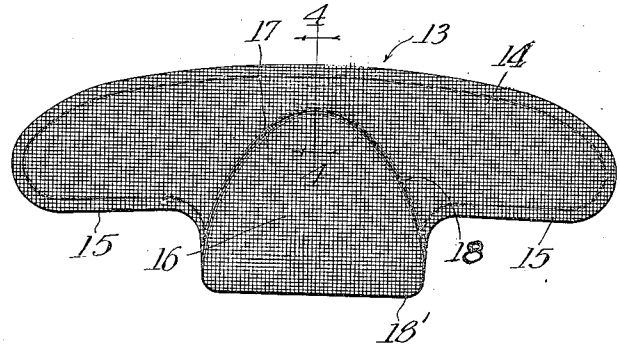

Fig. 5.

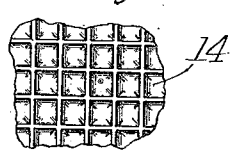

Fig. 4.

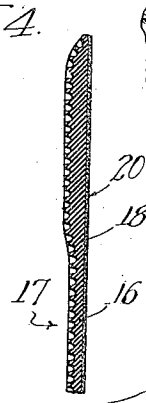

Fig. 2.

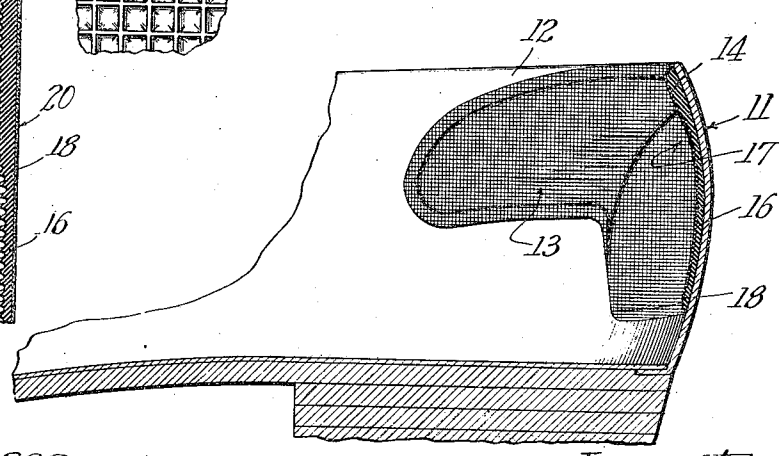

Witnesses:

Robert H. Weir

Arthur W. Carlson

Inventor

William M. Scholl

Garée Bain & Mary Attys.

UNITED STATES PATENT OFFICE.

WILLIAM M. SCHOLL, OF CHICAGO, ILLINOIS.

SHOE-HEEL-RETAINING GRIP.

1,174,619. Specification of Letters Patent. Patented Mar. 7, 1916.

Application filed March 20, 1915. Serial No. 15,957.

To all whom it may concern:

Be it known that I, WILLIAM M. SCHOLL, a citizen of the United States, residing at Chicago, in the county of Cook and State of Illinois, have invented certain new and useful Improvements in Shoe-Heel-Retaining Grips, of which the following is a specification.

My invention relates to improvements in shoe-heel retaining-grips, particularly applicable to low shoes, such as oxfords or pumps, to keep the heel-embracing portion of the shoe from slipping, and thereby to tend to prevent the heel of the wearer from becoming chafed or blistered and the hosiery from becoming worn at the heel.

Among the objects of my invention are to provide a structure which is very effective in exerting a grip upon the heel of the wearer, which is comfortable in use, and which may easily be applied to the shoe, and which is simple and cheap to manufacture.

In the drawings wherein I have illustrated an embodiment of my invention—Figure 1 shows a shoe equipped with a retaining grip embodying my invention; Fig. 2 is a vertical section through the heel portion of such shoe; Fig. 3 shows the heel grip blank in front view; Fig. 4 is a fragmentary enlarged section on line 4—4 of Fig. 3; and Fig. 5 is an enlarged front elevation of a fragment of the gripping surface.

In the drawing 10 indicates a "low" shoe of which 11 is the back of the heel receiving portion and 12 the side wall of said heel portion.

13 indicates in general the retaining-grip structure, which is, of course, a separate article of manufacture. The heel grip structure, 13, is a rubber body preferably made in a single piece, shaped to fit in the portion 11—12 of the shoe near the top thereof, preferably made, in general, of uniform, maximum thickness adjacent its ends and along its top, but thinned to provide at its central lower portion a heel receiving socket.

In the specific construction shown 14 indicates in general a band, that, illustratively, may be about 4 inches long and about an inch wide, with a thickness of about one-eighth of an inch, having its rear surface flat throughout and its front edges beveled as at 15, the upper edge of said grip being shaped approximately to conform to the upper line of a low shoe when the blank is in place for use, and the central lower portion of the grip being thinned as at 16, to form a recess 17, merging, at the curved shoulder 18, into the body part of the strip along an arched line, so that the pocket may approximately conform to the heel protuberance of the human foot. Preferably I extend the central portion of the blank downward as at 18′ in a tab that is a continuation of the thinned portion 16, so that the tab may extend almost to the bottom of the heel wall 11, while the side wings, or end portions of the body of said structure extend only about a half the depth of the heel portion of the shoe so that at the sides the lower edge of the grip may tend to grip the foot. The gripping or inner surface of the grip is formed, preferably throughout the entire surface, by a series of intersecting ribs that, at their gripping edges, are narrower than the spaces intervening between the ribs, and said ribs preferably widening toward their bases, where they merge into the solid base of rubber. Such formation both enhances the gripping qualities of the article and its comfort in use, giving the structure a softness in excess of the ordinary resiliency of the rubber.

The rear surface of the rubber, which is preferably flat, may be preliminarily coated with an adhesive coating 20, to be moistened before application, by use of a suitable solvent, and stuck to the leather of the shoe in applying the article; or this coating may be dispensed with and any usual adhesive employed to effect the connection of the rubber to the leather.

Having thus described my invention, what I claim is:

1. A rubber heel grip shaped to conform to the sides and back portion of the counter of a shoe, and having a donwardly extending central portion formed with a pocket therein having a bottom wall adapted to contact with and grip the heel of the wearer.

2. As an article of manufacture a rubber heel grip having a body shaped to fit the upper inside portion of the counter of a shoe along the sides and rear thereof, and a central tab portion depending from said body, central lower portions of said body and tab being thinned to provide a pocket.

3. As an article of manufacture a rubber heel grip having a body shaped to fit the upper inside portion of the counter of a shoe along the sides and rear thereof, and a central tab portion depending from said

body, central lower portions of said body and tab being thinned to provide a pocket and the gripping surface of said body and tab being formed with intersecting ribs.

4. As an article of manufacture a rubber heel grip adapted to be inserted in the counter of a shoe and having a half elliptical heel receiving portion of comparatively thin rubber and side wings thicker than the heel receiving portion, joined thereabove, and projecting at each side of the upper portion thereof.

In testimony whereof I hereunto set my hand in the presence of two subscribing witnesses.

WILLIAM M. SCHOLL.

In the presence of—
GEO. T. MAY, Jr.,
MARY F. ALLEN.