(12) INTERNATIONAL APPLICATION PUBLISHED UNDER THE PATENT COOPERATION TREATY (PCT)

(19) World Intellectual Property Organization
International Bureau

(43) International Publication Date
3 September 2009 (03.09.2009)

PCT

(10) International Publication Number
WO 2009/107005 A2

(51) International Patent Classification:
*G01T 1/16* (2006.01)

(21) International Application Number:
PCT/IB2009/050410

(22) International Filing Date:
2 February 2009 (02.02.2009)

(25) Filing Language: English

(26) Publication Language: English

(30) Priority Data:
61/031,024 25 February 2008 (25.02.2008) US

(71) Applicant *(for all designated States except DE, US)*: **KONINKLIJKE PHILIPS ELECTRONICS N.V.** [NL/NL]; Groenewoudseweg 1, NL-5621 BA Eindhoven (NL).

(71) Applicant *(for DE only)*: **PHILIPS INTELLECTUAL PROPERTY & STANDARDS GMBH** [DE/DE]; Lübeckertordamm 5, 20099 Hamburg (DE).

(72) Inventors; and

(75) Inventors/Applicants *(for US only)*: **SOLF, Torsten, J.** [DE/DE]; c/o 595 Miner Road, Cleveland, Ohio 44143 (US). **SCHULZ, Volkmar** [DE/DE]; c/o 595 Miner Road, Cleveland, Ohio 44143 (US). **WEISSLER, Bjoern** [DE/DE]; c/o 595 Miner Road, Cleveland, Ohio 44143 (US).

(74) Agents: **BEKKERS, Joost, J., J.** et al.; High Tech Campus Building 44, NL-5656 AE Eindhoven (NL).

(81) Designated States *(unless otherwise indicated, for every kind of national protection available)*: AE, AG, AL, AM, AO, AT, AU, AZ, BA, BB, BG, BH, BR, BW, BY, BZ, CA, CH, CN, CO, CR, CU, CZ, DE, DK, DM, DO, DZ, EC, EE, EG, ES, FI, GB, GD, GE, GH, GM, GT, HN, HR, HU, ID, IL, IN, IS, JP, KE, KG, KM, KN, KP, KR, KZ, LA, LC, LK, LR, LS, LT, LU, LY, MA, MD, ME, MG, MK, MN, MW, MX, MY, MZ, NA, NG, NI, NO, NZ, OM, PG, PH, PL, PT, RO, RS, RU, SC, SD, SE, SG, SK, SL, SM, ST, SV, SY, TJ, TM, TN, TR, TT, TZ, UA, UG, US, UZ, VC, VN, ZA, ZM, ZW.

(84) Designated States *(unless otherwise indicated, for every kind of regional protection available)*: ARIPO (BW, GH, GM, KE, LS, MW, MZ, NA, SD, SL, SZ, TZ, UG, ZM, ZW), Eurasian (AM, AZ, BY, KG, KZ, MD, RU, TJ, TM), European (AT, BE, BG, CH, CY, CZ, DE, DK, EE, ES, FI, FR, GB, GR, HR, HU, IE, IS, IT, LT, LU, LV, MC, MK, MT, NL, NO, PL, PT, RO, SE, SI, SK, TR), OAPI (BF, BJ, CF, CG, CI, CM, GA, GN, GQ, GW, ML, MR, NE, SN, TD, TG).

**Declarations under Rule 4.17**:

*[Continued on next page]*

(54) Title: ISO-PLANE BACKBONE FOR RADIATION DETECTORS

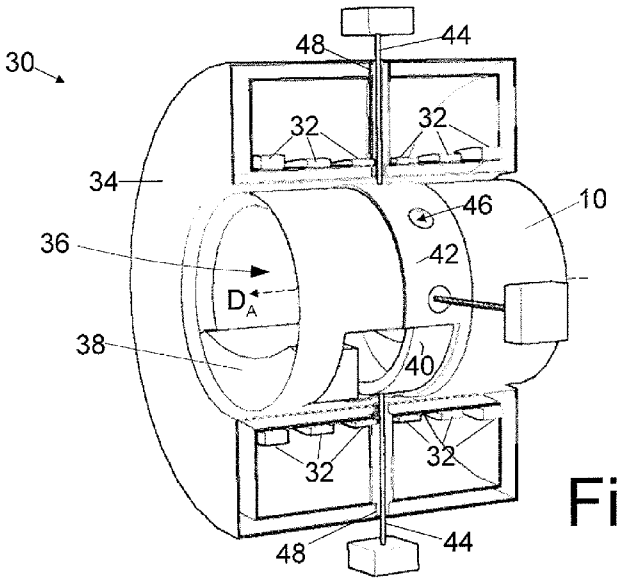


Fig. 3

(57) Abstract: An imaging system comprises: a magnetic resonance scanner (30) having a cylindrical bore (36) defining a cylinder axis ($D_A$), the magnetic resonance scanner having a gradient coil (10, 10') defining an isocenter (64) within the bore and an isoplane (66) passing through the isocenter and oriented transverse to the cylinder axis; a ring of radiation detectors (60a, 60b, 60') arranged concentric with the cylindrical bore and configured to detect radiation emanating from within the bore; and a generally annular electronic circuit board (62, 62') arranged concentric with the cylindrical bore and centered on the isoplane, the generally annular electronic circuit board operatively connected with the ring of radiation detectors to generate electrical signals indicative of detection of radiation by the ring of radiation detectors.

WO 2009/107005 A2

— *as to applicant's entitlement to apply for and be granted a patent (Rule 4.17(ii))*

— *as to the applicant's entitlement to claim the priority of the earlier application (Rule 4.17(iii))*

**Published**:

— *without international search report and to be republished upon receipt of that report (Rule 48.2(g))*

# ISO-PLANE BACKBONE FOR RADIATION DETECTORS

## DESCRIPTION

The following relates to the imaging arts. The following finds illustrative application to hybrid magnetic resonance scanning and positron emission tomography (PET) systems, and is described with particular reference thereto. The following finds more general application to hybrid imaging system including magnetic resonance scanning capability and any other second imaging modality that employs sensitive radiation detector electronics.

There is interest in multi-modality or hybrid scanners including both magnetic resonance (MR) and positron emission tomography (PET) capability. For example, Fiedler et al., WO 2006/111869 discloses various hybrid imaging systems. In some hybrid system embodiments disclosed in that reference, solid state PET detector elements are disposed between rungs of a whole-body birdcage coil in order to efficiently use the available cylindrical bore space. For use in an MR environment, solid state PET detectors such as scintillators coupled with solid-state silicon photomultiplier (SiPM) detectors have advantages over scintillators coupled with conventional photomultiplier tube (PMT) detectors, as discussed in WO 2006/111869.

In a conventional PET system, the PET detectors are arranged as a complete annular ring, so as to give 360° coverage of the examination region. Using less than a full annular detector ring generally results in missing data and the potential for introduction of imaging artifacts. However, the annular ring configuration of the PET detectors presents a problem for integration with an MR system, because the magnetic fields generated by the MR system can induce eddy currents in the annular PET ring.

The following provides a new and improved apparatuses and methods which overcome the above-referenced problems and others.

In accordance with one aspect, an imaging system comprises a ring of radiation detectors configured to detect radiation and a generally annular electronic circuit board disposed coaxially with the ring of radiation detectors and operatively connected with the ring of radiation detectors to generate electrical signals indicative of detection of radiation by the ring of radiation detectors.

In accordance with another aspect, an imaging system comprises: a magnetic resonance scanner having a cylindrical bore defining a cylinder axis, the magnetic resonance scanner including a magnetic field gradient coil defining an isocenter within the bore and an isoplane passing through the isocenter and oriented transverse to the cylinder axis; a ring of radiation detectors arranged concentric with the cylindrical bore and configured to detect radiation emanating from within the bore; and a generally annular electronic circuit board arranged concentric with the cylindrical bore and centered on the isoplane, the generally annular electronic circuit board operatively connected with the ring of radiation detectors to generate electrical signals indicative of detection of radiation by the ring of radiation detectors.

In accordance with another aspect, an imaging method comprises: acquiring magnetic resonance data using a cylindrical bore magnetic resonance scanner having a magnetic field gradient coil defining an isocenter and an isoplane; detecting radiation using a ring of radiation detectors; and conducting electrical signals indicative of the detected radiation along electrically conductive paths disposed in the isoplane.

One advantage resides in providing reduced eddy current in PET components of a hybrid PET/MR scanner.

Another advantage resides in providing reduced Lorentz forces on PET components of a hybrid PET/MR scanner.

Another advantage resides in providing a more compact PET/MR scanner.

Still further advantages of the present invention will be appreciated to those of ordinary skill in the art upon reading and understand the following detailed description.

FIGURES 1 and 2 diagrammatically show perspective and end views, respectively, of an illustrative split magnetic field gradient coil.

FIGURE 3 diagrammatically shows a perspective view of a hybrid system having magnetic resonance (MR) scanner capability and positron emission tomography (PET) scanner capability, with the MR scanner employing the split gradient coil of FIGURES 1 and 2 and a generally annular PET detection system disposed in a central gap of the split gradient coil.

FIGURE 4 diagrammatically shows a side sectional view of the gradient coil and PET detection system of the hybrid system of FIGURE 3, with diagrammatic indications of the magnetic resonance and PET regions of interest, the isocenter and

isoplane of the MR scanner, a whole body radio frequency coil of the MR scanner, and associated time-of-flight processing electronics.

FIGURE 5 diagrammatically shows an end view of the PET detection system and the whole body radio frequency coil of the hybrid system of FIGURE 3, with diagrammatic indications of the magnetic resonance and PET regions of interest, the isocenter of the MR scanner, and the associated time-of-flight processing electronics.

FIGURE 6 diagrammatically shows a side sectional view of the gradient coil and PET detection system of a variation of the hybrid system of FIGURE 3, in which the gradient coil is not split and the generally annular electronic circuit board of the generally annular PET detection system has a different configuration.

With reference to FIGURES 1 and 2, a split magnetic field gradient coil **10** is generally cylindrical with a cylinder axis $\mathbf{D_A}$ (indicated by a dashed arrow in FIGURE 1) and includes primary coil windings **12** and shield coil windings **14** at a larger radial position than the primary coil windings. The split gradient coil **10** has an annular central gap **16** that is free of coil windings. Connecting conductors **18** disposed at each edge of the central gap **16** electrically connect selected primary and secondary coil windings. The split gradient coil **10** is operable to superimpose a transverse magnetic field gradient $\mathbf{G_y}$ on an axially oriented static magnetic field at least in a magnetic resonance region of interest **R** (indicated diagrammatically by a dotted boundary line in FIGURE 2). A split magnetic field gradient coil for generating a transverse magnetic field gradient in the x-direction can similarly be formed by rotating the coil windings **12**, **14** by 90° relative to the coil generating the $\mathbf{G_y}$ magnetic field gradient. Connecting conductors **20** disposed at the ends of the coil windings **10** distal from the central gap **16** also electrically connect selected primary and secondary coil windings the selected windings being potentially the same as, or different from, the selected windings connected proximate to the central gap **16** by the connecting conductors **18**. Some primary windings or secondary windings may be isolated windings that are not connected by any of the connecting conductors **18**, **20**.

The connecting conductors **20** provide a relatively larger and more uniform field of view, as disclosed for example in Shvartsman et al., U.S. Publ. Appl. 2006/0033496 A1 which is incorporated herein by reference in its entirety. The connecting conductors **18** enable non-zero current densities adjacent the central gap **16** that

compensate for the lack of magnetically operative current density in the central gap **16**. This compensation enables the central gap **16** to be made larger than would otherwise be possible while still maintaining acceptable coil efficiency and field quality. The central gap **16** has an axial extent **W** of at least ten centimeters, and more preferably at least about fifteen centimeters, and in some embodiments at least about twenty centimeters, so as to accommodate a ring of radiation detectors configured to detect 511 keV radiation. It is also contemplated to omit either one or both of the connecting conductor sets **18**, **20**.

The configuration of the coil windings **12, 14, 18, 20** is designed to provide good magnetic field gradient uniformity at least across the magnetic resonance region **R** of interest. Such design is suitably performed using a stream function approach, as described for example in Peeren, "Stream Function Approach for Determining Optimal Surface Currents", Journal of Computational Physics vol. 191 pages 305-21 (2003) and in "Stream Function Approach for Determining Optimal Surface Currents", Doctoral Thesis of Gerardus N. Peeren (Eindhoven University of Technology 2003), both of which are incorporated herein by reference in their entirety. The stream function approach determines a continous current density distribution, represented by a stream function, that provides a specified magnetic field distribution, and then discretizes the obtained stream function to obtain the coil windings distribution.

With reference to FIGURE 3, the split gradient coil **10** is supported in a magnetic resonance scanner **30** on a dielectric former or other rigid support that can accommodate the Lorentz forces that are sometimes generated between the two halves of the split gradient coil **10** during operation. The magnetic resonance scanner **30** further includes main magnet windings **32** disposed in a cryogenic housing **34** defining a main magnet producing a static axially oriented $B_0$ magnetic field in the magentic resonance region **R** of interest. The magnetic resonance scanner **30** defines a cylindrical bore **36** that is concentric with the generally cylindrical split gradient coil **10** and with the main magnet windings **32**, and hence the generally cylindrical components **10**, **30**, **32** share the common cylinder axis $\mathbf{D_A}$. A suitable support **38** is provided to support a prone human patient or other subject in the bore **36** so as to have at least a region of interest of the subject lie within the magnetic resonance acquisition region **R**.

The scanner of FIGURE 3 is a hybrid PET/MR scanner, and has a generally annular PET detection system **40** is disposed in the annular central gap **16** of the split

gradient coil **30**. The generally annular PET detection system **40** is configured to image a PET imaging region $\mathbf{R_{PET}}$, which may be the same volume as the magnetic resonance imaging region **R** or, as shown in FIGURES 4-6, may be of differing size, and may also be offset translationally or of different shape. An annular brace **42** provides mechanical support for the halves of the split gradient coil **30** in the region of the gap **16**. The PET detection system **40** is, in this illustrated embodiment, independently supported by mounting members **44** passing through openings **46** in the brace **42** and openings **48** in the magnet housing **34**. The openings **48** are tubular openings suitably sealed to maintain vacuum and cryogenic reservoir integrity of the housing **34**. Independent support of the PET detection system **40** is advantageous because the split gradient coil **10** tends to move and accelerate during operation due to Lorentz forces. Some movement of the gradient coil **10** is expected even when it is restrained by a rigid dielectric former, the brace **42**, or other mechanical restraints. Such movement, if transferred to the PET detection system **40**, would result in degradation of the acquired PET images.

The configuration of FIGURE 3 is an illustrative example. In other contemplated embodiments, the brace **42** is omitted in favor of a continuous stiff cylindrical dielectric former unit, and the PET detection system **40** is mounted in an annular recess of the stiff former and vibrationally isolated from the stiff former by vibrational isolation mountings such as air bearings. Actively controlled vibration compensatoin can also be realized by multiple piezo-actuator mountings which are feedback-controlled by MEMS accelerometers. It is also contemplated to use a gradient coil that is not split and does not have the annular gap **16**. In such embodiments, the generally annular PET detection system is suitably disposed at a smaller radius inside of the non-split gradient coil.

The hybrid system may include other components which are not shown for simplicity. For example, a radio frequency screen (not shown in FIGURE 3) can extend into the openings **48** to provide RF isolation. Additional pass-through openings can be provided for electrical and other connections to the PET detection system **40**, or such connections can be routed alongside or inside selected mounting members **44**. As the pass-through openings are relatively small, they can be interspersed amongst the main magnet windings **32** so that the magnetic design of the main magnet is substantially unaffected by addition of the PET detection system **40**. The magnetic resonance scanner also employs

one or more radio frequency coils (not shown in FIGURE 3), such coils optionally including local coils disposed in the bore **36**, a generally cylindrical whole-body coil arranged concentrically with the bore **36**, or a combination thereof.

With reference to FIGURES 4 and 5, the generally annular PET detection system **40** includes a ring of radiation detectors configured to image a PET imaging region $\mathbf{R_{PET}}$. In the embodiment of FIGURES 4 and 5, the generally annular PET detection system **40** is configured as two rings of radiation detectors **60a**, **60b** disposed symmetrically about a disk-shaped electronic circuit board **62**. The rings of radiation detectors **60a**, **60b** are generally full rings spanning 360°, although having some angular gaps in the rings is also contemplated. FIGURES 4 and 5 also diagrammatically illustrate a typical whole-body radio frequency coil **63**, such as a whole-body quadrature birdcage or transverse electromagnetic (TEM) coil. The illustrated whole body coil **63** is disposed at a smaller radius than the gradient coil **10** and the PET detection system **40**. In a suitable arrangement, axially oriented conductors of the whole body radio frequency coil **63** (diagrammatically depicted in sectional view in FIGURE 5) are suitably made of conductive copper strip lines sufficiently thin to be transmissive for 511 keV radiation. In other embodiments, the whole body radio frequency coil may have a common radius with the annular PET detection system **40**, and the axially oriented conductors disposed at azimuthal positions between PET detector modules. Moreover, in some embodiments the whole body radio frequency coil **63** may be omitted altogether, and a local coil such as a surface coil or coil array, local head coil, or the like used to provide both radio frequency excitation and magnetic resonance detection.

The ring of radiation detectors **60a**, **60b** is configured to detect 511 keV radiation as is suitable for PET imaging. Although not shown in detail, the ring of radiation detectors **60a**, **60b** can, for example, be a conventional configuration of a scintillation layer made of a material that generates scintillations responsive to exposure to 511 keV radiation, and an array of photomultiplier tube (PMT) detectors arranged to detect the scintillations. In other embodiments, the PMT detectors are replaced by solid state detectors such as silicon photomultiplier (SiPM) detectors or avalanche photodiode (APD) detectors configured to detect the scintillations.

The disk-shaped electronic circuit board **62** is generally annular and disposed coaxially with the ring of radiation detectors **60a**, **60b** and is operatively

connected with the ring of radiation detectors **60a**, **60b** to generate electrical signals indicative of detection of 511 keV radiation by the ring of radiation detectors **60a**, **60b**. It is contemplated for the circuit board **62** to span an angular range of less than 360°, that is, for the generally annular circuit board **62** to have one or more angular gaps. The operative connection between the radiation detectors **60a**, **60b** and the circuit board **62** typically includes electrical bias connections to apply an operating voltage bias across the PMT detectors, SiPM detectors, APD detectors, or other detectors, and electrical signal connections to receive current pulses or other electrical signals from the detectors indicative of detection of 511 keV radiation.

The disk-shaped generally annular electronic circuit board **62** suitably includes PET backbone electronics such as galvanic power, bias voltage, and signal connections and electrically conductive power, bias voltage, and signal pathways, reference clock distribution pathways, synchronization circuitry, and so forth. Optionally, higher-level functions such as pulse integration and analog-to-digital conversion (ADC), time-to-digital conversion (TDC), single and coincident event processing and so forth are also integrated onto the disk-shaped generally annular electronic circuit board **62**. Alternatively, some or all higher-level functionality may be disposed remotely from the annular PET detection system **40**, for example being embodied by an associated computer operatively connected with the annular PET detection system by an ADC card or other suitable connecting hardware. In some embodiments, the electronic circuit board may include an electrically conductive ground plane of aluminium, copper, or another electrically conductive material. Such a ground plane optionally may provide or contribute to heat-sinking of the electronics.

The PET detection system **40** including the ring of radiation detectors **60a**, **60b** and the generally annular electronic circuit board **62** is disposed in the central annular gap **16** of the split gradient coil **10**. The split gradient coil **10** generates magnetic field gradients along selected directions, such as along an axial or z-direction parallel with the cylinder axis $\mathbf{D}_A$ and along x- and y-directions transverse to the axial or z-direction. The split gradient coil **10** generates such gradients by superimposing a spatially varying (typically linearly spatially varying) magnetic field on the static $B_0$ magnetic field in the magnetic resonance imaging volume **R**. The generated gradients also typically vary with time. The split gradient coil **10** is designed such that there is an isocenter **64**, that is, a point

in space at which the superimposed spatially varying and time varying magnetic field is zero regardless of the direction or intensity of the instantaneous generated magnetic field gradient. Although this is described for the split gradient coil **10**, it is typical gradient design practice to have such an isocenter, regardless of whether the gradient coil is a split gradient coil or not. The isocenter **64** is typically located at the center of the magnetic resonance region of interest **R** that is imaged during magnetic resonance imaging, as illustrated in FIGURES 4 and 5. However, the isocenter can be located elsewhere, and in some embodiments the position of the isocenter can optionally be adjusted for a given magnetic field gradient coil by a DC adjustment of the gradient coil.

Since magnetic field gradients are in general three-dimensional in nature, for example being capable of generation along any of three Cartesian x-, y-, and z-directions, the isocenter **64** is a point in space. For a cylindrical magnetic resonance scanner such as that illustrated herein, it is also convenient to define an isoplane **66** of the gradient coil which passes through the isocenter **64** and is transverse to the axial direction or cylinder axis $\mathbf{D_A}$. For an axial magnetic field gradient, that is, a gradient oriented along the cylinder axis $\mathbf{D_A}$, the superimposed varying magnetic field is ideally zero in the isoplane **66**, and is generally small everywhere across the isoplane **66**. For a transverse magnetic field gradient, that is, a gradient oriented transverse to the cylinder axis $\mathbf{D_A}$, the superimposed varying magnetic field is not zero in the isoplane **66** as a general rule, but is typically small at radial positions comparable to that of the gradient coil radius.

Accordingly, by configuring the generally annular electronic circuit board **62** as a disk disposed in the isoplane **66** of the gradient coil **10**, as illustrated in FIGURE 4, the electronic circuit board **62** is exposed to time varying magnetic fields superimposed by the gradient coil **10** of low or zero magnitude. As a result, eddy currents induced by time-varying magnetic field gradients in electrical conductors, a ground plane, or other electrically conductive elements of the generally annular electronic circuit board **62** are of low or zero magnitude. Lorentz forces on the generally annular electronic circuit board **62** due to magnetic field gradients are also low or zero.

For a typical printed circuit board having layer distances in a range of 0.2-0.3 millimeters, the potential area for induced signals is small enough that voltages induced by magnetic field gradients is less than about 10 millivolts. Large amounts of power (greater than 1 kilowatt) can be distributed within the plane by using several low

resistive copper planes, for example using conventional multi-layer printed circuit board stock to manufacture the circuit board **62**. The power planes can also be arranged as the outer layers of the multi-layer circuit board so as to provide shielding for more sensitive high-speed signaling layers that are arranged as interior layers.

Although the generally annular electronic circuit board **62** is shown in FIGURE 5 as a continuous annulus, it is contemplated to introduce one or more breaks or gaps into the generally annular electronic circuit board **62**, or into electrically conductive pathways of the generally annular electronic circuit board **62**, in order to further suppress eddy current formation. In some embodiments, circuitry of the electronic circuit board **62** does not define any complete annular conductive paths coextensive with the circumference of the generally annular electronic circuit board **62** or around the bore **36**.

Another advantage of using the generally annular electronic circuit board **62** as the backbone for the annular PET detection system **40**, as compared with using flexible electrically conductive cabling for the backbone, is that the circuitry of the generally annular electronic circuit board **62** has rigid and fixed path lengths. The signals from the generally annular PET system **40** are input to a coincident events processor with reference timing unit **70**. The rigid and fixed paths of the electronic circuit board **62** advantageously allow determination of precise relative timing of radiation detection events so as to detect substantially coincident 511 keV radiation detection events indicative of an electron-positron annihilation event. The unit **70** incorporates or accesses an optional time-of-flight processor if the PET system is to perform time-of-flight localization. In such time-of-flight PET, a time-of-flight difference between two substantially coincident 511 keV radiation detection events is used to further localize the electron-positron annihilation event in space. Such time-of-flight processing entails precise determination of relative detection event times, which is facilitated by the precise electrical signal transmission delay defined by the electronic circuit board **62**. In contrast, flexible cabling can result in path lengths that vary in orientation or length, leading to less accurate time-of-flight processing or inclusion of optical synchronization which increases PET system complexity and cost. The time-of-flight processing generates time-of-flight PET data each comprising substantially coincident 511 keV detection events defining a line of response, with some localization along the line of response provided by the time-of-flight information. In conventional PET with no time-of-flight processing, the electron-positron annihilation

event is localized only to the line of response. For conventional PET the rigid and fixed path lengths provided by the electronic circuit board **62** still ensure well-defined electronic signal transmission delays, which provide robust time windowing to identify subtantially coincident 511 keV detection events. The PET data (either conventional or time-of-flight localized) is suitably stored in a PET system control and data storage unit **72** and reconstructed using a suitable reconstruction algorithm such as filtered backprojection, iterative backprojection, or so forth.

With reference to FIGURE 6, the benefit of the disk-shaped generally annular electronic circuit board **62** can also be approximately realized by otherwise-shaped generally annular electronic circuit boards that are positioned close to the isoplane **66**. In the embodiment of FIGURE 6, a modified gradient coil **10'** is not split, but rather has a groove **16'** to receive a modified generally annular PET detection system **40'**. The groove **16'** is not amenable to a large radial span of the disk-shaped electronic circuit board **62**. Accordingly, a generally annular electronic circuit board **62'** is everywhere locally oriented transverse to a plane of the ring of radiation detectors, that is, to the isoplane **66** of the gradient coil **10'** for the hybrid scanner arrangement of FIGURE 6, and is disposed at a larger annular radius than a modified ring of radiation detectors **60'**. The generally annular electronic circuit board **62'** is configured to have a small extent transverse to a plane of the ring of radiation detectors so as to be kept close to the isoplane **66**.

Although not illustrated, a generally annular electronic circuit board which is a combination of the disk-shaped generally annular electronic circuit board **62** and the transversely oriented generally annular circuit board **62'** is also contemplated. Although not illustrated, the annular circuit board **62** can be realized by only partially splitting the PET detector **60** (preferably from the outer side) into **60a** and **60b** which remain physically connected. In such an arrangment, bus conductors and other conductors of extended length or which form conductive paths substantially coextensive with the annulus of the circuit board are preferably disposed on the disk-shaped board portion **60** which has the least time-varying magnetic field exposure. The transversely oriented circuit board portion **62'** is in these embodiments preferably used for shorter electrical conductor lengths such as conductors electrically connecting PMT, SiPM, APD, or other detectors with the proximate portions of the bias and signal buses located on the disk-shaped board portion **60**.

Similarly, if the transversely oriented generally annular circuit board **62'** is used alone, as shown in FIGURE 6, then the bus conductors and other conductors of extended length or which form conductive paths substantially coextensive with the annulus of the circuit board are preferably placed on the circuit board **62'** as close as practicible to the isoplane **66** of the gradient coil **10'**, so as to have the least time-varying magnetic field exposure.

Although a hybrid PET/MR system has been described, the disclosed PET backbone configurations are also suitably employed in stand-alone PET scanners, in PET/SPECT (single photon emission computed tomography) systems, and so forth. Moreover, it is contemplated to integrate other radiation detectors besides PET detectors with an MR system. For example, the ring of radiation detectors **60a**, **60b**, **60'** can be replaced by a ring comprising a plurality of radiation detectors for single photon emission computed tomography (SPECT) imaging. In such embodiments, the radiation detectors are typically configured to detect radiation which may be different from 511 keV. For SPECT/MR, the ring of radiation detectors in some embodiments may be configured as movable radiation detector heads capable of moving along the ring (e.g., moving along the annular gap **16** of the split gradient coil **10**, or along the groove **16'** of the gradient coil **10'**), similar to the radiation detector heads configuration used in some gamma cameras. Such SPECT/MR systems can readily utilize the disclosed backbone configurations **62**, **62'** illustratively disclosed herein with respect to the illustrative PET system **40**.

The invention has been described with reference to the preferred embodiments. Modifications and alterations may occur to others upon reading and understanding the preceding detailed description. It is intended that the invention be construed as including all such modifications and alterations insofar as they come within the scope of the appended claims or the equivalents thereof.

## CLAIMS

Having thus described the preferred embodiments, the invention is now claimed to be:

**1**. An imaging system comprising:

a ring of radiation detectors **(60a, 60b, 60')**; and

a generally annular electronic circuit board **(62, 62')** disposed coaxially with the ring of radiation detectors and operatively connected with the ring of radiation detectors to generate electrical signals indicative of detection of radiation by the ring of radiation detectors.

**2**. The imaging system as set forth in claim **1**, wherein the generally annular circuit board **(62)** is disk-shaped.

**3**. The imaging system as set forth in claim **2**, wherein the ring of radiation detectors comprise two rings **(60a, 60b)** of radiation detectors disposed symmetrically about the disk-shaped generally annular circuit board **(62)**.

**4**. The imaging system as set forth in claim **3**, wherein the generally annular electronic circuit board **(62)** spans a radial range that at least partially overlaps a radial range spanned by the ring of radiation detectors **(60a, 60b)**.

**5**. The imaging system as set forth in claim **1**, wherein the generally annular electronic circuit board **(60')** is disposed at a larger radius than the ring of radiation detectors **(60')**, and a plane of the generally annular electronic circuit board **(60')** is everywhere locally oriented transverse to a plane of the ring of radiation detectors.

**6**. The imaging system as set forth in claim **1**, wherein the generally annular electronic circuit board **(62)** spans an angular range of less than $360^{o}$.

**7**. The imaging system as set forth in claim **1**, wherein the ring of radiation detectors **(60a, 60b, 60')** and the generally annular electronic circuit board **(62, 62')** are

configured to detect 511 keV radiation indicative of positron-electron annihilation events, the imaging system further comprising:

a magnetic resonance scanner **(30)**, the generally annular electronic circuit board **(62, 62')** being disposed intersecting an isoplane **(66)** of a magnetic field gradient coil **(10, 10')** of the magnetic resonance scanner.

**8**. The imaging system as set forth in claim **7**, wherein the generally annular electronic circuit board **(62)** is disk-shaped and disposed in the isoplane **(66)** of the gradient coil **(10)**.

**9**. The imaging system as set forth in claim **8**, wherein the ring of radiation detectors comprise two rings **(60a, 60b)** of radiation detectors disposed symmetrically about the disk-shaped generally annular electronic circuit board **(62)**.

**10**. The imaging system as set forth in claim **8**, wherein the generally annular electronic circuit board **(62)** spans a radial range that at least partially overlaps a radial range spanned by the ring of radiation detectors **(60a, 60b)**.

**11**. The imaging system as set forth in claim **7**, wherein the generally annular electronic circuit board comprises:

a disk portion **(62)** lying in the isoplane **(66)** of the gradient coil **(10)**.

**12**. The imaging system as set forth in claim **11**, wherein the generally annular electronic circuit board comprises:

a transverse portion **(62')** centered on the isoplane **(66)** of the gradient coil **(10')** and oriented transverse to the disk portion **(62)**.

**13**. The imaging system as set forth in claim **7**, wherein circuitry of the generally annular electronic circuit board **(62, 62')** does not define any complete annular conductive paths coextensive with the circumference of the generally annular electronic circuit board.

**14**. The imaging system as set forth in claim **7**, wherein the gradient coil **(10, 10')** of the magnetic resonance scanner **(30)** comprises:

a split gradient coil **(10)** having an annular gap **(16)** centered at the isoplane **(66)**, the ring of radiation detectors **(60a, 60b)** and the generally annular electronic circuit board **(62)** being disposed in the annular gap of the split gradient coil.

**15**. The imaging system as set forth in claim **7**, wherein the gradient coil **(10, 10')** of the magnetic resonance scanner **(30)** comprises:

a gradient coil **(10')** having an annular groove **(16')** centered at the isoplane **(66)** and receiving the ring of radiation detectors **(60')** and the generally annular electronic circuit board **(62')**.

**16**. The imaging system as set forth in claim **1**, further comprising:

a processor **(70)** configured to identify a time-of-flight difference between two substantially coincident 511 keV radiation detection events, the processor accounting for an electrical signal transmission delay defined by the generally annular electronic circuit board **(62, 62')**.

**17**. An imaging system comprising:

a magnetic resonance scanner **(30)** having a cylindrical bore **(36)** defining a cylinder axis **($D_A$)**, the magnetic resonance scanner including a magnetic field gradient coil **(10, 10')** defining an isocenter **(64)** within the bore and an isoplane **(66)** passing through the isocenter and oriented transverse to the cylinder axis;

a ring of radiation detectors **(60a, 60b, 60')** arranged concentric with the cylindrical bore and configured to detect radiation emanating from within the bore; and

a generally annular electronic circuit board **(62, 62')** arranged concentric with the cylindrical bore and centered on the isoplane, the generally annular electronic circuit board operatively connected with the ring of radiation detectors to generate electrical signals indicative of detection of radiation by the ring of radiation detectors.

**18**. The imaging system as set forth in claim **17**, wherein the generally annular electronic circuit board comprises:

an annular disk **(62)** lying in the isoplane **(66)** of the magnetic field gradient coil **(10)**.

**19**. The imaging system as set forth in claim **17**, wherein the generally annular electronic circuit board **(62')** is disposed at a radius larger than a maximum radius of the ring of radiation detectors **(60')**.

**20**. The imaging system as set forth in claim **17**, wherein the generally annular electronic circuit board **(62)** defines an annular disk lying in the isoplane **(66)**, and the ring of radiation detectors comprise two rings **(60a, 60b)** of radiation detectors disposed symmetrically about the isoplane.

**21**. The imaging system as set forth in claim **17**, wherein the gradient coil **(10, 10')** of the magnetic resonance scanner **(30)** comprises:

a split gradient coil **(10)** arranged concentrically with the cylindrical bore **(36)**, the ring of radiation detectors **(60a, 60b)** and the generally annular electronic circuit board **(62)** being disposed in an annular gap of the split gradient coil.

**22**. The imaging system as set forth in claim **17**, wherein the gradient coi8l **(10, 10')** of the magnetic resonance scanner **(30)** comprises:

a gradient coil **(10')** arranged concentrically with the cylindrical bore **(36)**, the gradient coil having an annular groove **(16')** centered on the isoplane **(66)** and receiving the ring of radiation detectors **(60')** and the generally annular electronic circuit board **(62')**.

**23**. An imaging method comprising:

acquiring magnetic resonance data using a cylindrical bore magnetic resonance scanner **(30)** having a gradient coil **(10, 10')** defining an isocenter **(64)** and an isoplane **(66)**;

detecting radiation using a ring of radiation detectors **(60a, 60b, 60')**; and

conducting electrical signals indicative of the detected radiation along electrically conductive paths disposed in the isoplane **(66)**.

**24**. The imaging method as set forth in claim **23**, further comprising:

distributing electrical power to the ring of radiation detectors **(60a, 60b, 60')** along electrically conductive paths disposed in the isoplane **(66)**.

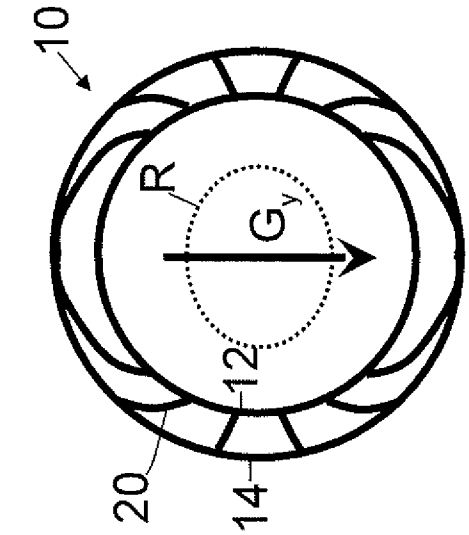


Fig. 2

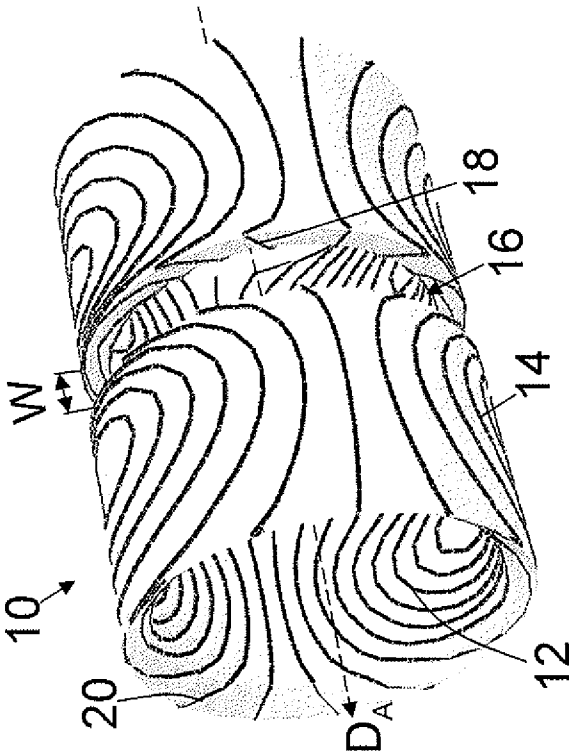


Fig. 1

Fig. 3

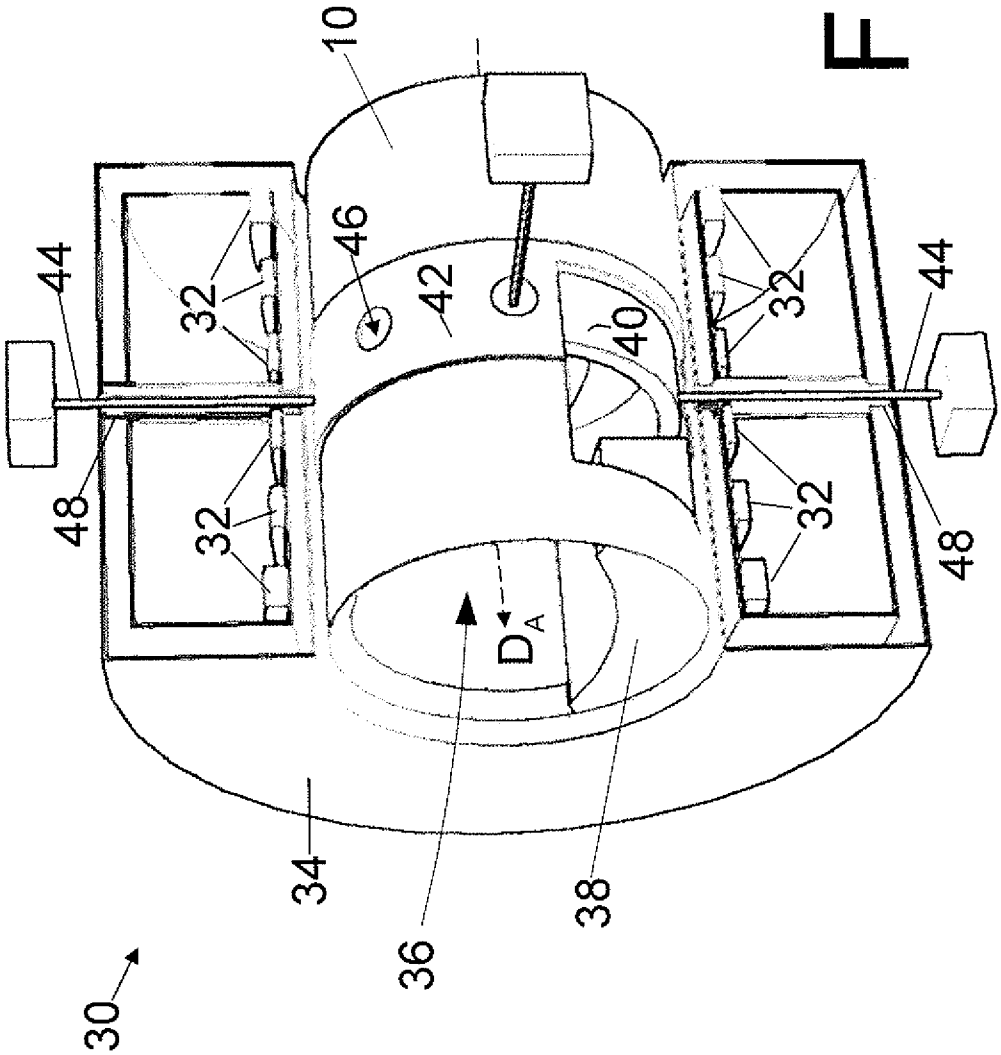

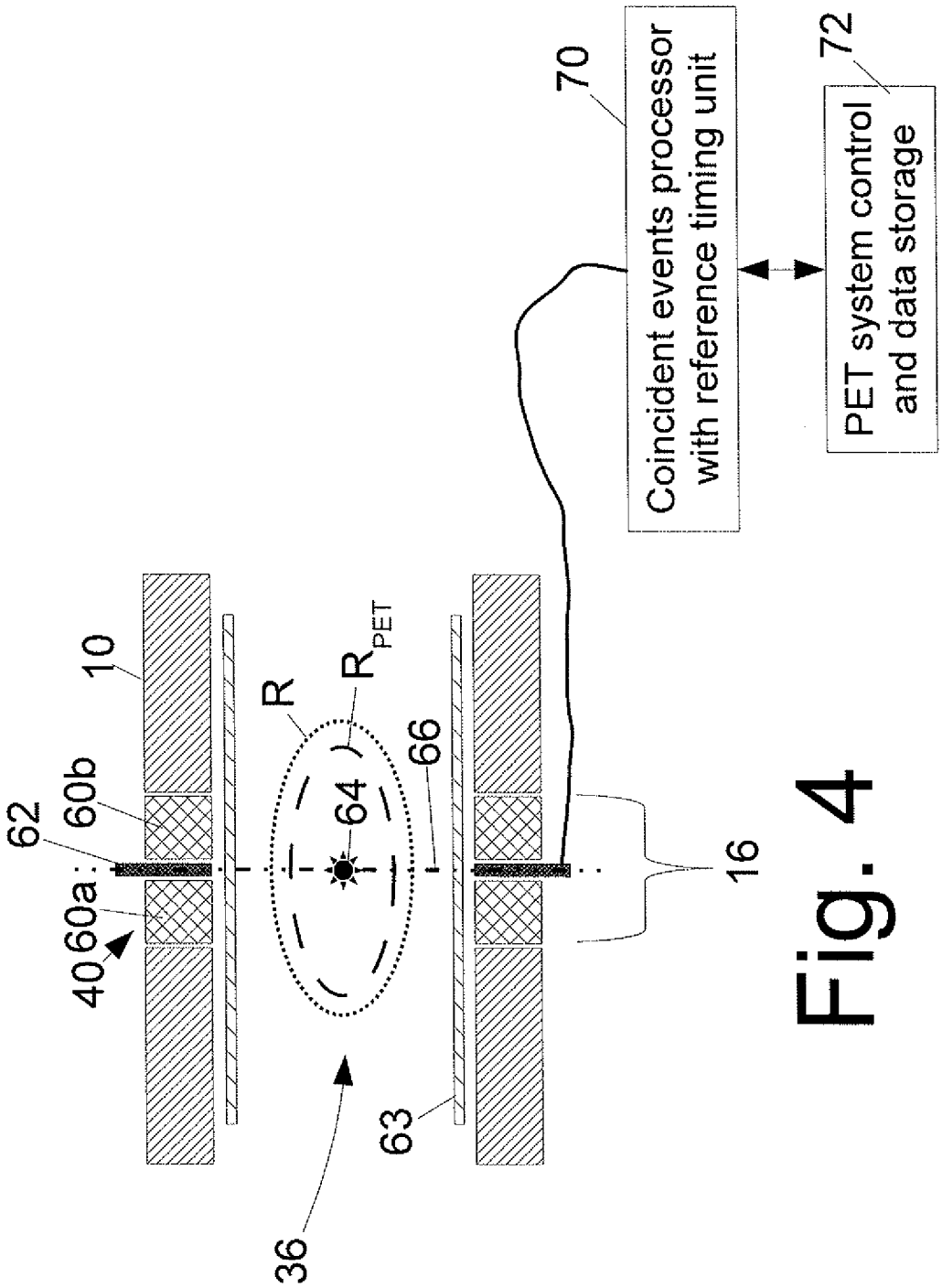
70
Coincident events processor with reference timing unit
72
PET system control and data storage
10
R
$R_{PET}$
66
62
60b
64
60a
40
16
36
63

Fig. 4

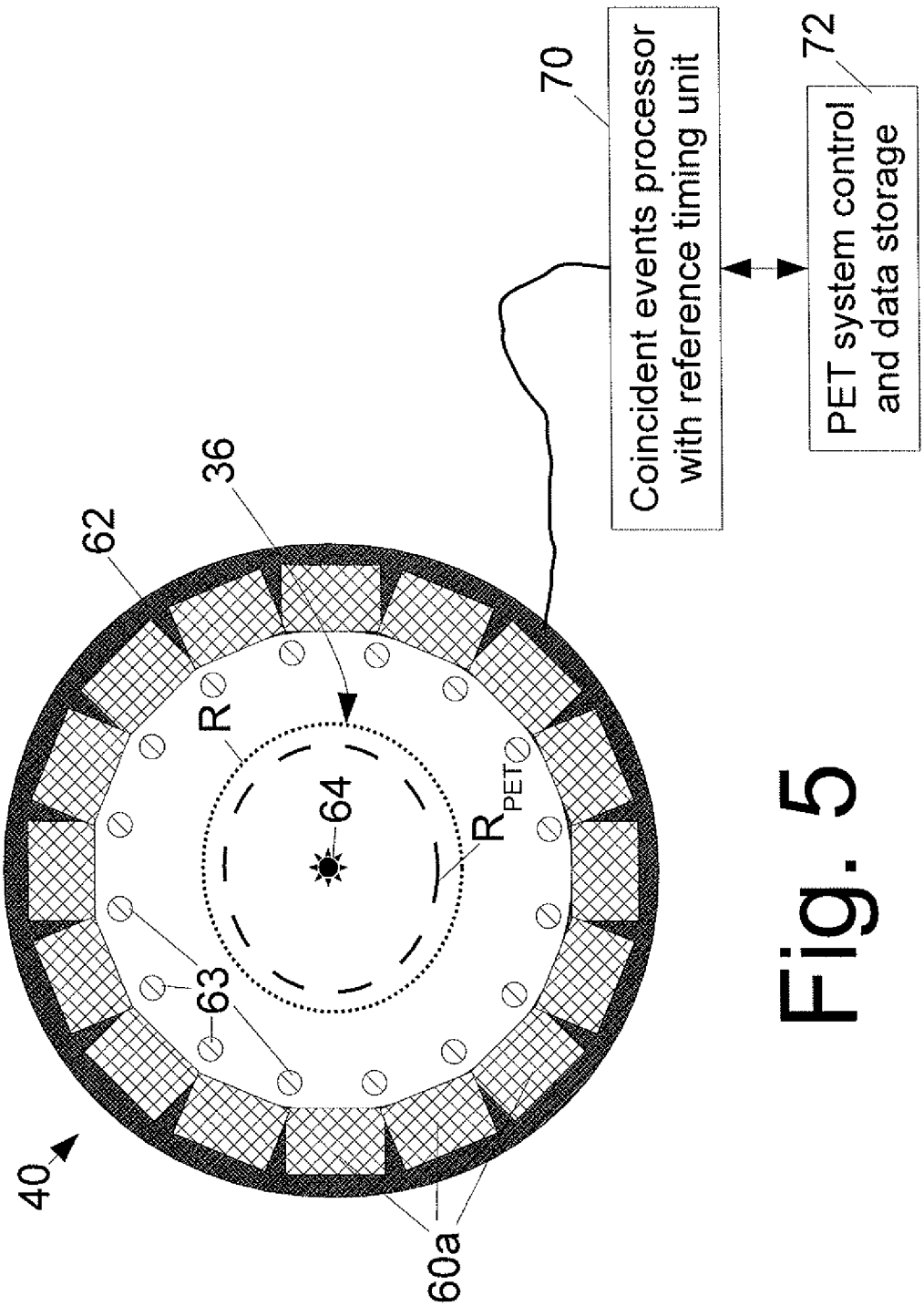
70
Coincident events processor with reference timing unit
72
PET system control and data storage
62
36
R
64
$R_{PET}$
63
40
60a

Fig. 5

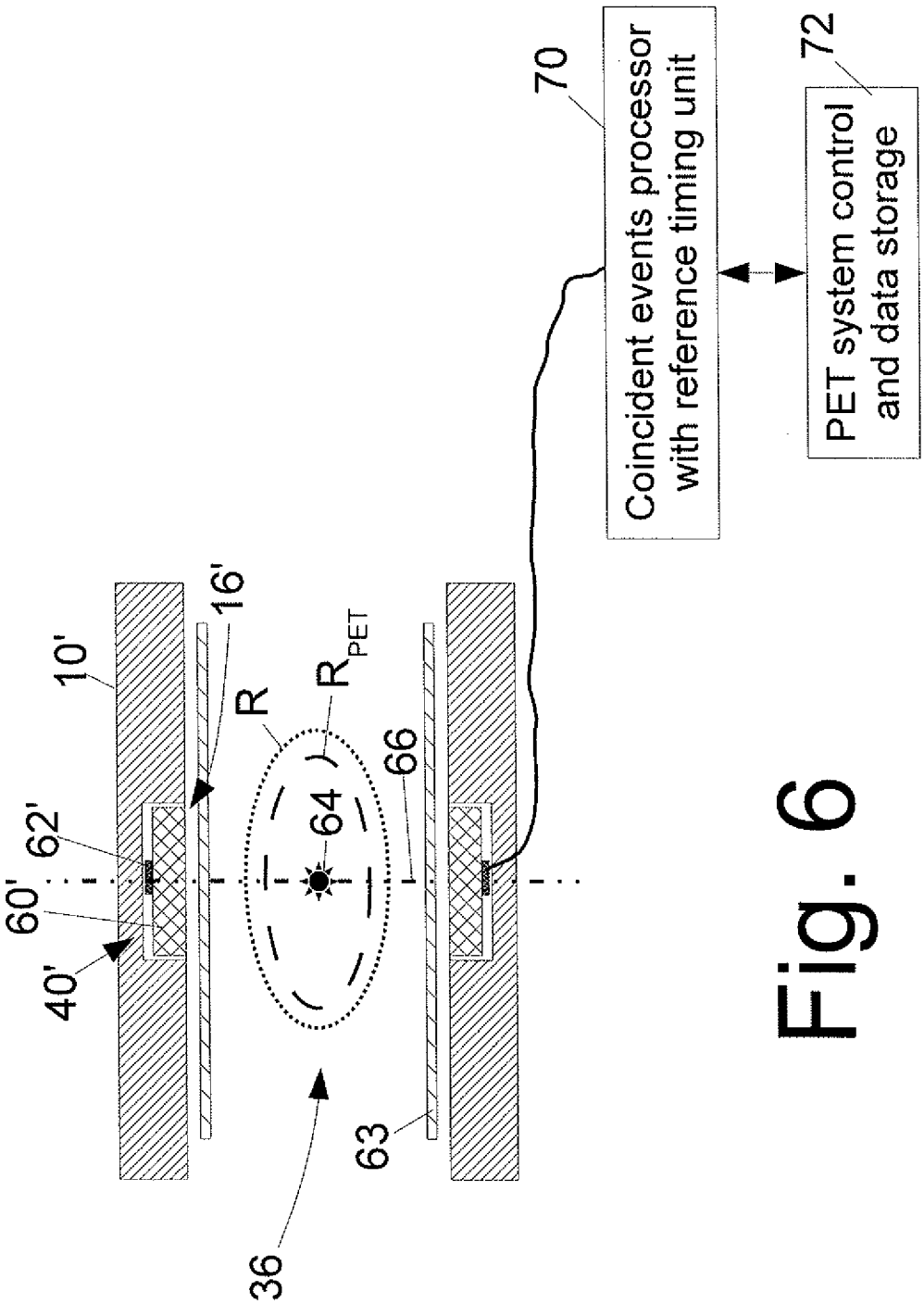
70
Coincident events processor with reference timing unit
72
PET system control and data storage
10'
16'
R
$R_{PET}$
66
64
62'
60'
40'
63
36

Fig. 6