(12) INTERNATIONAL APPLICATION PUBLISHED UNDER THE PATENT COOPERATION TREATY (PCT)

(19) World Intellectual Property Organization
International Bureau

(43) International Publication Date
8 July 2010 (08.07.2010)

PCT

(10) International Publication Number
WO 2010/077263 A2

(51) International Patent Classification:
C07C 6/04 (2006.01) *C07C 11/06* (2006.01)

(21) International Application Number:
PCT/US2009/006143

(22) International Filing Date:
17 November 2009 (17.11.2009)

(25) Filing Language: English

(26) Publication Language: English

(30) Priority Data:
12/317,794 29 December 2008 (29.12.2008) US

(71) Applicant *(for all designated States except US)*: **LYONDELL CHEMICAL TECHNOLOGY, L.P.** [US/US]; Two Greenville Crossing, 4001 Kennet Pike, Suite 220, Greenville, Delaware 19807 (US).

(72) Inventors: **SAWYER, Gary, A.**; 712 Centennial Avenue, Media, Pennsylvania 19063 (US). **AXELROD, Michael, G.**; 1071 Tyler Drive, Newtown Square, Pennsylvania 19073 (US).

(74) Agents: **HAN, Yuanzhang** et al.; LyondellBasell Industries, 3801 West Chester Pike, Newtown Square, Pennsylvania 19073 (US).

(81) Designated States *(unless otherwise indicated, for every kind of national protection available)*: AE, AG, AL, AM, AO, AT, AU, AZ, BA, BB, BG, BH, BR, BW, BY, BZ, CA, CH, CL, CN, CO, CR, CU, CZ, DE, DK, DM, DO, DZ, EC, EE, EG, ES, FI, GB, GD, GE, GH, GM, GT, HN, HR, HU, ID, IL, IN, IS, JP, KE, KG, KM, KN, KP, KR, KZ, LA, LC, LK, LR, LS, LT, LU, LY, MA, MD, ME, MG, MK, MN, MW, MX, MY, MZ, NA, NG, NI, NO, NZ, OM, PE, PG, PH, PL, PT, RO, RS, RU, SC, SD, SE, SG, SK, SL, SM, ST, SV, SY, TJ, TM, TN, TR, TT, TZ, UA, UG, UZ, VC, VN, ZA, ZM, ZW.

(84) Designated States *(unless otherwise indicated, for every kind of regional protection available)*: ARIPO (BW, GH, GM, KE, LS, MW, MZ, NA, SD, SL, SZ, TZ, UG, ZM, ZW), Eurasian (AM, AZ, BY, KG, KZ, MD, RU, TJ, TM), European (AT, BE, BG, CH, CY, CZ, DE, DK, EE, ES, FI, FR, GB, GR, HR, HU, IE, IS, IT, LT, LU, LV, MC, MK, MT, NL, NO, PL, PT, RO, SE, SI, SK, SM, TR), OAPI (BF, BJ, CF, CG, CI, CM, GA, GN, GQ, GW, ML, MR, NE, SN, TD, TG).

Declarations under Rule 4.17:

— *as to applicant's entitlement to apply for and be granted a patent (Rule 4.17(ii))*

Published:

— *without international search report and to be republished upon receipt of that report (Rule 48.2(g))*

(54) Title: PROPYLENE PRODUCTION

Fig. 1

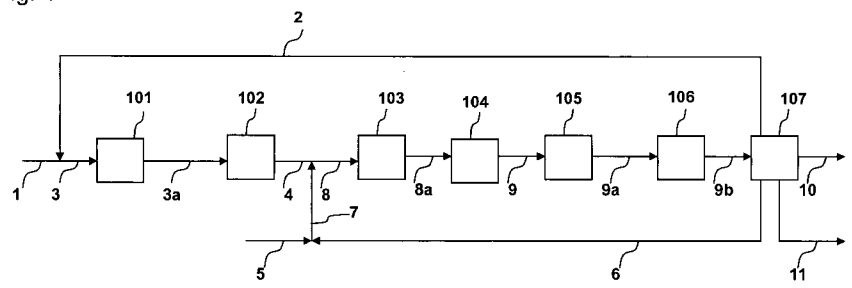

(57) Abstract: A propylene production process is disclosed. The process comprises (a) reacting a feed stream comprising isobutene in the presence of a skeletal isomerization catalyst to obtain an isomerized stream comprising C4 olefins; and (b) reacting the isomerized stream with ethylene in the presence of a metathesis catalyst to form a metathesis product stream comprising propylene, C4 olefins, and C5+ olefins. The metathesis reaction pressure is equal to or lower than that of the skeletal isomerization.

WO 2010/077263 A2

01-2742A

PROPYLENE PRODUCTION

FIELD OF THE INVENTION

The invention relates to a process for producing propylene from a C_4 olefin and ethylene.

BACKGROUND OF THE INVENTION

Steam cracking of hydrocarbons is a petrochemical process that is widely used to produce olefins such as ethylene, propylene, C_4 olefins (1-butene, 2-butenes, isobutene), butadiene, and aromatics such as benzene, toluene, and xylene. 2-Butenes include cis-2-butene and/or trans-2-butene. In an olefin plant, a hydrocarbon feedstock such as naphtha, gas oil, or other fractions of whole crude oil is mixed with steam. This mixture, after preheating, is subjected to severe thermal cracking at elevated temperatures in a pyrolysis furnace. The cracked effluent from the pyrolysis furnace contains gaseous hydrocarbons of great variety (from 1 to 35 carbon atoms per molecule). This effluent contains hydrocarbons that are aliphatic, aromatic, saturated, and unsaturated, and may contain significant amounts of molecular hydrogen. The cracked product of a pyrolysis furnace is then further processed in the olefin plant to produce, as products of the plant, various individual product streams such as hydrogen, ethylene, propylene, mixed hydrocarbons having four or five carbon atoms per molecule, and pyrolysis gasoline.

Crude C_4 hydrocarbons can contain varying amounts of n-butane, isobutane, C_4 olefins, acetylenes (ethyl acetylene and vinyl acetylene), and butadiene. See Kirk-Othmer Encyclopedia of Chemical Technology, online edition (2008). Crude C_4 hydrocarbons are typically subjected to butadiene extraction or butadiene selective hydrogenation to remove most, if not essentially all, of the butadiene and acetylenes present. Thereafter the C_4 raffinate (called raffinate-1) is subjected to a chemical reaction (e.g., etherification, hydration, or dimerization) wherein the isobutene is converted to other compounds (e.g., methyl tert-butyl ether, tert-butyl alcohol, or diisobutene) (see, e.g., U.S. Pat. Nos. 6,586,649 and 4,242,530). The remaining C_4 stream containing mainly n-butane, isobutane, 1-butene and 2-butenes is called raffinate-2. However, sometimes the market demand for methyl tert-butyl ether, tert-

butyl alcohol, or diisobutene is limited and it is desirable to convert isobutene into other valuable products, such as propylene.

Processes for producing propylene by isobutene skeletal isomerization and metathesis reactions are known. See, e.g., U.S. Pat. Nos. 6,743,958, 6,872,862, 6,977,318, 7,074,976. Skeletal isomerization is practiced at relatively low pressures to limit undesirable side reactions. However, the processes disclosed so far require the metathesis step to be performed at relatively high pressure. As a result, it is necessary to cool the isomerized stream from the skeletal isomerization to a lower temperature in order to pressurize the stream, then heat the stream to a high temperature before it is fed to the metathesis reaction. In an example in U.S. Pat. No. 6,743,958, the metathesis reactor is operated at 3.5 MPa (514 psig). U.S. Pat. Nos. 6,872,862, 6,977,318, and 7,074,976 teach that the metathesis reaction is performed at a temperature of 300 to 800 F and under a pressure of 200 to 600 psig.

It is desirable to develop processes that minimize the heat-exchanging requirements and thus energy and equipment costs.

SUMMARY OF THE INVENTION

The invention is propylene production process. The process comprises (a) reacting a feed stream comprising isobutene in the presence of a skeletal isomerization catalyst to obtain an isomerized stream comprising C_4 olefins; and (b) reacting the isomerized stream with ethylene in the presence of a metathesis catalyst to form a metathesis product stream comprising propylene, C_4 olefins, and C_5 and higher olefins. The metathesis reaction pressure is equal to or lower that of the skeletal isomerization.

BRIEF DESCRIPTION OF DRAWINGS

Fig. 1 is a schematic representation of one embodiment of the invention.

Fig. 1A shows the details of the separation zone of Fig. 1.

Fig. 2 is a schematic representation of a comparative process for producing propylene.

Fig. 2A shows the details of the separation zone of Fig. 2.

DETAILED DESCRIPTION OF THE INVENTION

The feed stream of the process comprises isobutene. Preferably, the feed comprises greater than 95 wt% C_4 olefins. One suitable feed stream may be obtained from raffinate-1, which is obtained from a crude C_4 stream from refining or steam cracking processes. Raffinate-1 contains mostly C_4 olefins, n-butane, and isobutane. Preferably, paraffins (n-butane and isobutane) are removed from raffinate-1 by extractive distillation with a suitable extractive solvent (e.g., dimethyl formamide, N-methyl pyrrollidone, or N-formyl morpholine) or selective adsorption. One suitable feed is obtained by dehydration of tert-butyl alcohol.

The process comprises reacting the feed stream in the presence of a skeletal isomerization catalyst to obtain an isomerized stream comprising C_4 olefins. The skeletal isomerization catalyst is any solid that can catalyze isomerization of isobutene to linear C_4 olefins (1-butene, 2-butenes). Additionally, they also catalyze the conversion between 1-butene and 2-butenes. These catalysts are known in the art. Suitable skeletal isomerization catalysts include zeolites, metal oxides, and mixed metal oxides.

A skeletal isomerization catalyst comprising a zeolite may be used. Zeolites generally contain one or more of Si, Ge, Al, B, P, or the like, in addition to oxygen. Generally, zeolites having a one dimensional pore structure with a pore size ranging from more than about 0.4 nm to less than about 0.7 nm are useful for the process of this invention. Examples of zeolites suitable for skeletal isomerization include the hydrogen form of ferrierite, SAPO-11, SAPO-31, SAPO-41, FU-9, NU-23, NU-10, ZSM-12, ZSM-22, ZSM-23, ZSM-35, ZSM-48, ZSM-50, MeAPO-11, MeAPO-31, MeAPO-41, MeAPSO-11, MeAPSO-31, MeAPSO-41, ELAPO-11, ELAPO-31, ELAPO-41, ELAPSO-11, ELAPSO-31, ELAPSO-41, laumontite, clinoptilolite, cancrinite, offretite, hydrogen form of heulindite, hydrogen form of stilbite, and the magnesium or calcium form of mordenite, as described in U.S. Pat. No. 6,111,160. Other suitable zeolites are disclosed in U.S. Pat. No. 5,817,907, U.S. Pat. App. Pub. No. 2002/0019307, and EP 0 501 57.

A skeletal isomerization catalyst comprising a metal oxide or mixed oxides may be used. Suitable metal oxides or mixed oxides include alumina, silica-alumina,

zirconia, silica-zirconia, and the like. Examples of these may be found in U.S. Pat. Nos. 2,471,647, 3,558,733, 5,321,195, and 5,659,104.

Although the skeletal isomerization reaction may be carried out in any reactor type, a fixed-bed reactor is preferred. The catalyst is preferably in the form of extrudates, beads, granules, tablets, and the like.

The skeletal isomerization is carried out preferably at 500 to 850 F, more preferably at 600 to 750 F and at a pressure of 15 to 100 psig, more preferably at a pressure of 20 to 60 psig. The gas hourly space velocity is suitably in the range of 50 to 200 per hour.

An isomerized stream is produced from the skeletal isomerization reaction. The isomerized stream comprises C_4 olefins, and possibly small amounts of C_5 and higher olefins.

The process comprises reacting the isomerized stream with ethylene in the presence of a metathesis catalyst. Metathesis catalysts are well known in the art (see, e.g., U.S. Pat. Nos. 4,513,099, 5,120,894). Typically, the metathesis catalyst comprises a transition metal oxide. Suitable transition metal oxides include those of cobalt, molybdenum, rhenium, tungsten, and mixtures thereof. Conveniently, the catalyst is supported on a carrier. Suitable carriers include silica, alumina, titania, zirconia, zeolites, clays, and mixtures thereof. Silica and alumina are preferred carriers. The catalyst may be supported on a carrier in any convenient fashion, in particular by adsorption, ion-exchange, impregnation, or sublimation. The transition metal oxide constituent of the catalyst may amount to 1 to 30 wt% of the total catalyst, preferably 5 to 20 wt%.

In addition to the metathesis catalyst, the metathesis step preferably uses a double-bond isomerization catalyst. A double-bond isomerization catalyst can convert 1-butene to 2-butenes during the metathesis reaction, thus increase the propylene yield of the metathesis reaction.

Many double-bond isomerization catalysts can be used, including acidic catalysts and basic catalysts. Suitable acidic catalysts include metal oxides (e.g., alumina, zirconia, sulfated zirconia), mixed oxides (e.g., silica-alumina, zirconia-silica), acidic zeolites, acidic clays (see, e.g., U.S. Pat. No. 4,992,613, U.S. Pat. Appl. Pub. Nos. 2004/0249229 and 2006/0084831). The basic double-bond isomerization catalysts are preferably metal oxides such as magnesium oxide

(magnesia), calcium oxide, barium oxide, and lithium oxide. Metal oxides supported on a carrier may be used. Suitable carriers include silica, alumina, titania, silica-alumina, and the like, and mixtures thereof (see, e.g., U.S. Pat. Nos. 5,153,165, 5,300,718, 5,120,894, 4,992,612, U.S. Pat. Appl. Pub. No. 2003/0004385). A particularly preferred basic isomerization catalyst is magnesium oxide. Suitable magnesium oxide has a surface area of at least 1 square meters per gram (m^2/g), preferably at least 5 m^2/g.

The reaction of the isomerized stream with ethylene in the presence of a metathesis catalyst is performed at a pressure that is equal to or lower than the pressure of the skeletal isomerization. Typically, the pressure of the metathesis reaction is conducted at 15 to 100 psig, more preferably at 20 to 60 psig. The advantage of the present invention is that it does not require cooling the isomerized stream, pressurizing it, then heating it up again to a temperature suitable for the metathesis reaction. The invention thus saves energy and equipment. Examples 1 and 2 below further illustrate the advantages of the invention.

The metathesis reaction produces a metathesis product stream that comprises ethylene, propylene, C_4 olefins, and C_5 and higher olefins (C_5+ olefins).

Preferably, the process further comprises separating the metathesis product stream into an ethylene stream, a propylene product stream, a C_4 stream (containing mostly C_4 olefins), and a C_5+ olefins stream. The C_5+ olefins stream contains mostly olefins with five or more carbons, which may be used as gasoline blending components. Separation of a mixture like the metathesis product stream is known to a person skilled in the art. See U.S. Pat. No. 7,214,841. Typically, such separation is carried out by utilizing three distillation columns in series: a deethenizer, a depropenizer, and a debutenizer.

The ethylene stream is separated by the deethenizer as an overhead. Typically the deethenizer is operated at a temperature of -5 to 40 F in the condenser and a pressure of 350 to 650 psig. Preferably, the ethylene stream is recycled to the metathesis reaction of the process.

Propylene and any lighter compounds are removed in the overhead of the depropenizer. Typically the depropenizer is operated at a temperature of 50 to 140 F in the condenser and a pressure of 100 to 350 psig.

The C_4 olefins and any lighter compounds are removed from the debutenizer as an overhead. Typically the debutenizer is operated at a temperature of 100 to 160 F in the condenser and a pressure of 50 to 140 psig. Preferably, the C_4 olefins stream is recycled to the skeletal isomerization reaction of the process. C_5 and heavier products are separated as a bottoms of the debutenizer.

EXAMPLE 1

The process is shown in Figs. 1 and 1A. A fresh isobutene feed (100,000 lb/h) in line 1 is combined with a recycled C_4 stream from line 2 to form a combined C_4 feed in line 3. The combined C_4 feed is heated in heating zone 101 to 700 F. The heated combined C_4 stream, via line 3a, enters the skeletal isomerization reactor 102 to form an isomerized product stream. An H-Ferrierite catalyst described in Example 1 of U.S. Pat. No. 6,111,160 is used in reactor 102. The isomerization is performed at 700 F and 30 psig. The isomerized stream exits reactor 102 via line 4 at a temperature of 656 F and combines with the fresh ethylene feed in line 5 and a recycled ethylene stream in line 6. The combined feed is heated by heating zone 103 and enters a metathesis reactor 104 via line 8a. The metathesis reactor 104 contains a mixture of magnesium oxide and WO_3-on-silica as disclosed in U.S. Pat. No. 5,120,894. The metathesis reaction is performed at 650 F and 30 psig. The metathesis product stream exits the reactor 104 via line 9 and is cooled via cooling zone 105 to 140 F, pressurized by compressor 106, and fed to the separation zone 107 via line 9b.

The details of the separation zone 107 are shown in Figure 1A. It includes a debutenizer 107a, a depropenizer 107b, and a deethenizer 107c. The order of distillation, from lower pressure to higher pressure, is well suited for a low pressure vapor feed in line 9b. The metathesis product stream enters debutenizer 107a via line 9b. A C_5+ olefins stream is recovered as a bottoms stream of debutanizer 107a via line 11. The overhead containing butenes and lighter olefins is fed to the depropenizer 107b via line 12. The butenes stream is obtained as the bottoms of the depropenizer 107b and recycled to the isomerization reaction via line 2. The overhead enters the deethenizer 107c via line 13. An ethylene stream is separated in the deethenizer 107c as overhead in line 6. The propylene product stream is obtained from the bottoms stream via line 10. The expected compositions of various

streams are listed in Table 1. The total heat transferred for the process is shown in Table 2.

COMPARATIVE EXAMPLE 2

The process is shown in Figs. 2 and 2A. A fresh isobutene feed in line 1 is combined with a recycled C_4 stream from line 2 to form a combined C_4 feed in line 3. The combined C_4 stream is heated by the heating zone 201 to 700 F. The heated C_4 feed enters the isomerization reactor 202 via line 3a. An H-Ferrierite catalyst described in Example 1 of U.S. Pat. No. 6,111,160 is used in reactor 202. The isomerized product stream exits the reactor 202 via line 4 and enters cooling zone 203 and is cooled to 80 F. The condensed stream in line 4a is pumped to 450 psig by pump 204, and is mixed with a fresh ethylene feed in line 5, and a recycled ethylene stream from line 6. The mixed feed is heated in zone 205 to 650 F and enters metathesis reactor 206. The metathesis reactor 206 contains a mixture of magnesium oxide and WO_3-on-silica as disclosed in U.S. Pat. No. 5,120,894. The metathesis reactor is operated at 650 F and 450 psig. The metathesis product stream in line 9 is cooled via cooling zone 207 and enters the separation zone 208.

The details of the separation zone 208 are shown in Figure 2A. It includes a deethenizer 208a, a depropenizer 208b, and a debutenizer 208c. The metathesis product stream enters deethenizer 208a via line 9a. The order of distillation, from higher pressure to lower pressure, is well suited for a high pressure feed in line 9a. Unreacted ethylene is recovered as an overhead in deethenizer 208a and is recycled via line 6. The deethenizer bottoms stream containing propylene and C_4–C_6 olefins is fed to depropenizer 208b, where propylene product stream is recovered as an overhead via line 10. Butenes, C_5 olefins, and higher olefins from depropenizer 208b bottoms are fed to debutenizer 208c via line 13, where butenes are separated as overhead and are recycled via line 2. A C_5+ olefins stream is recovered as a bottoms product stream from debutenizer 208c via line 11. The expected compositions of various streams are listed in Table 1. The total heat transferred for the process is shown in Table 2.

Table 2 compares the heating and cooling requirements for the two examples, including those required for the separation zones. Energy savings can be realized by heat integrating hot process streams with cold process streams;

however, the size and cost of the heat integration equipment increases as the amount of heat integrated increases. By application of this invention (Example 1), the heat integration can be reduced by half, from 398 MMBTU/h to 194 MMBTU/h. The savings in heat integration is from changes in the front end of the process. Furthermore, heating with utilities such as steam or fired heaters is reduced from 218 MMBTU/h to 158 MMBTU/h. Cooling with utilities such as cooling water, air, or refrigeration is also reduced. The savings in utility heating and cooling is from changing the order of distillation, which lends itself to match the lower pressure from metathesis.

Table 1. Compositions of Streams in Examples 1 and Comparative Example 2 (lb/h)

Stream	1	2	3	4	5	6	7	8	9	10	11
Ethylene					39462	166964	206426	206426	166965	0	
Propylene		2583	2583	2583		1305	1305	3888	130480	126591	
Butene-1		3669	3669	23845				23845	3681	12	1
Cis-2-Butene		5539	5539	35224				35224	5627	0	89
Trans-2-Butene		7463	7463	46599				46599	7502	0	39
Isobutene	100000	89756	189756	100758				100758	89757	0	0
C5+ Olefins		1414	1414	1414				1414	14143		12729
Total	100000	110424	210424	210424	39462	168269	207731	418155	418155	126604	12857

Table 2. Total Heat Transferred

MMBTU/h	Example 1	Comparative Example 2
Heat Integrated	194	398
Utility Heating	158	218
Utility Cooling	198	225

We claim:

1. A process for producing propylene comprising

(a) reacting a feed stream comprising isobutene in the presence of a skeletal isomerization catalyst to obtain an isomerized stream comprising C_4 olefins; and

(b) reacting the isomerized stream with ethylene in the presence of a metathesis catalyst to form a metathesis product stream comprising propylene, C_4 olefins, and C_5 and higher olefins;

wherein step (b) is performed at an equal or lower pressure than step (a).

2. The process of claim 1 wherein step (a) is performed at 20 to 60 psig.

3. The process of claim 2 wherein step (b) is performed at 20 to 60 psig.

4. The process of claim 1 wherein the feed stream comprises greater than 95 wt% of C_4 olefins.

5. The process of claim 1 wherein the feed stream is produced by dehydration of tert-butyl alcohol.

6. The process of claim 1 further comprising separating the metathesis product stream into an ethylene stream, a propylene product stream, a C_4 olefins stream, and C_5 and higher olefins stream.

7. The process of claim 6 wherein step (a) is performed at 20 to 60 psig.

8. The process of claim 7 wherein step (b) is performed at 20 to 60 psig.

9. The process of claim 6 wherein the ethylene stream is recycled to step (b).

10. The process of claim 6 wherein the C_4 olefins stream is recycled to step (a).

11. The process of claim 6 wherein the feed stream comprises greater than 95 wt% C_4 olefins.

12. The process of claim 6 wherein the feed stream is produced by dehydration of tert-butyl alcohol.

PROPYLENE PRODUCTION
Docket No. 01-2742A
Inventors: Gary A. Sawyer et al.

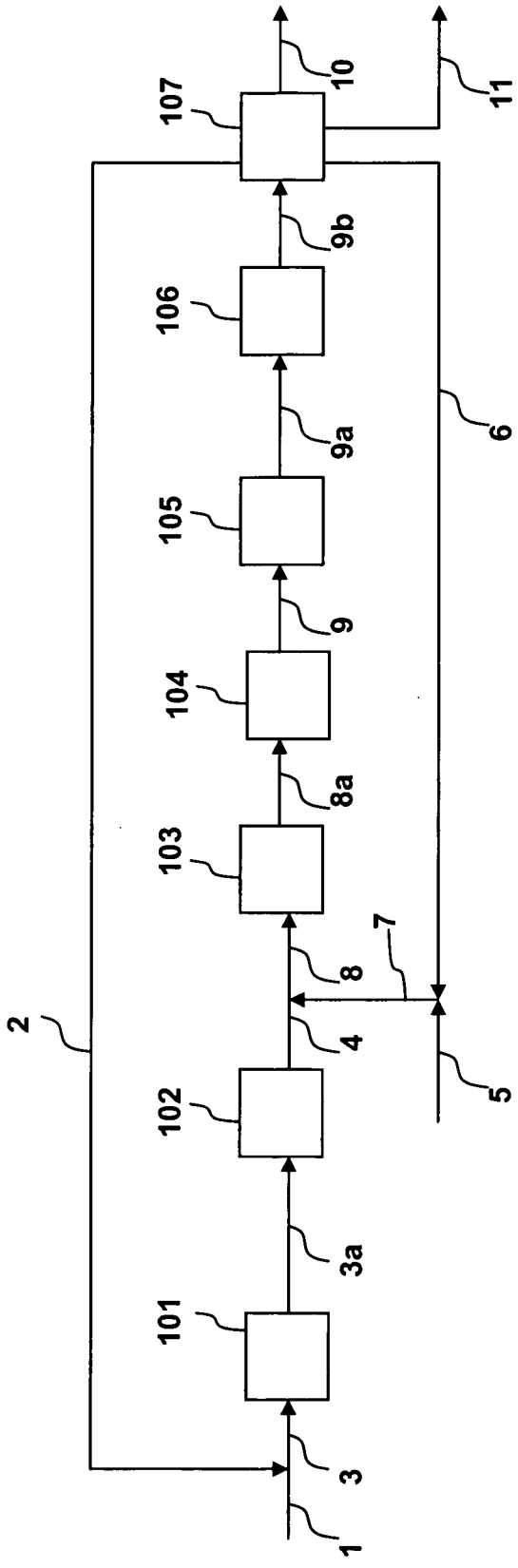

Fig. 1

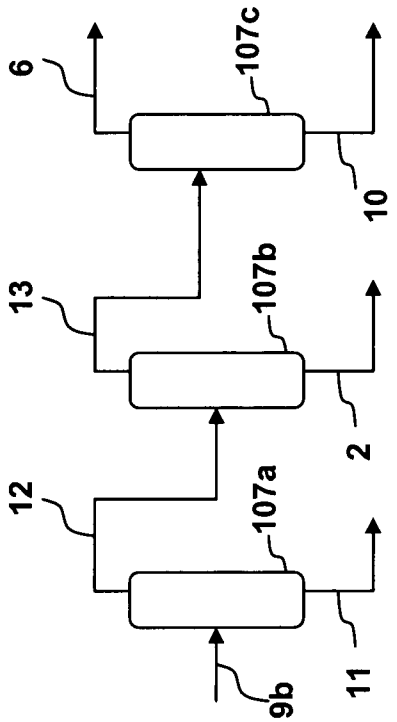

Fig. 1A

PROPYLENE PRODUCTION
Docket No. 01-2742A
Inventors: Gary A. Sawyer et al.

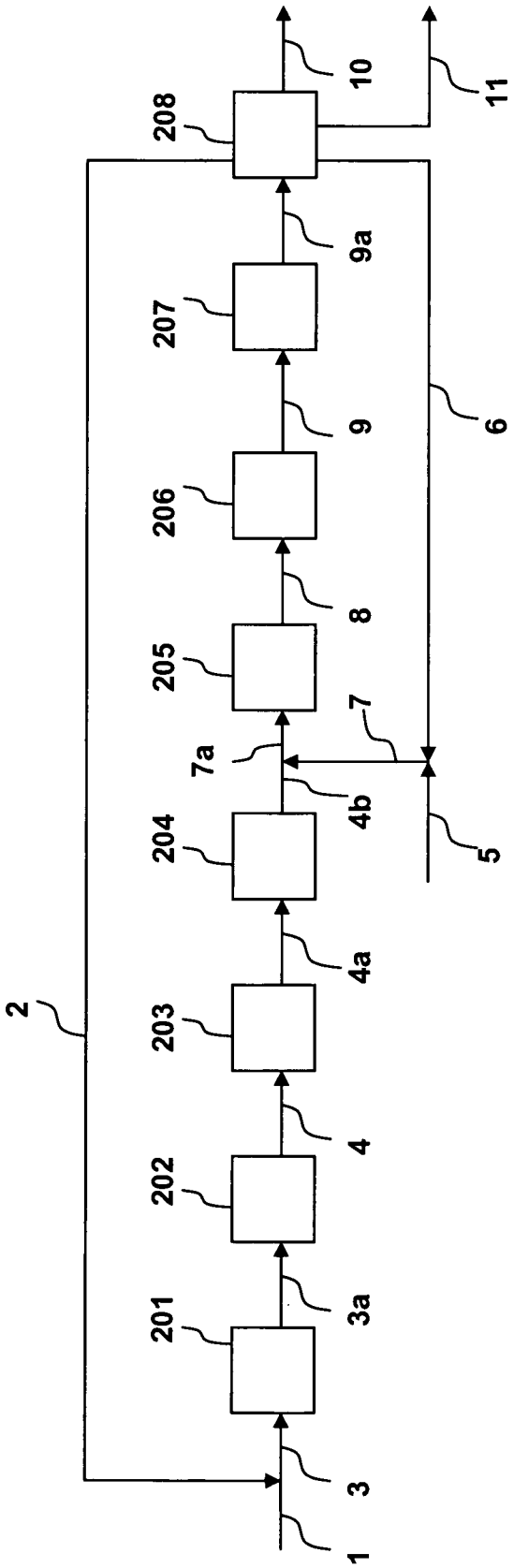

Fig. 2

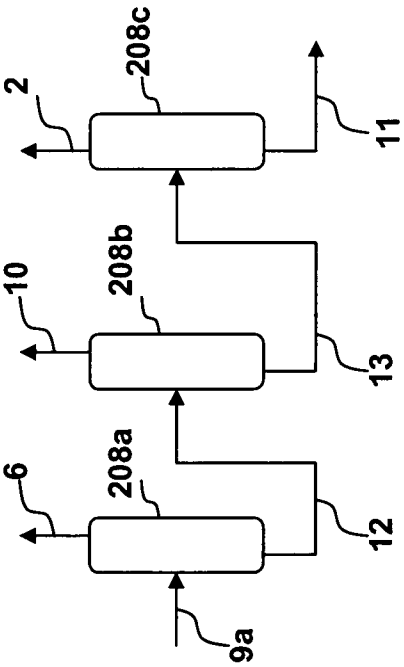

Fig. 2A