Oct. 11, 1932. G. A. GLEASON 1,881,488

SELF CLOSING CAP FOR COLLAPSIBLE TUBES

Filed July 10, 1931

Fig. 1.

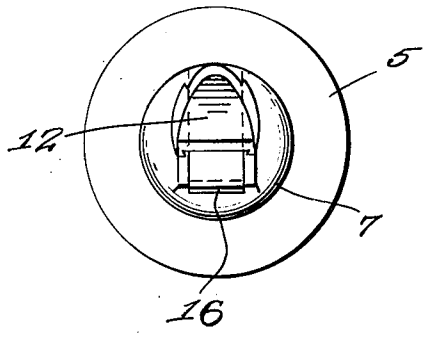

Fig. 2.

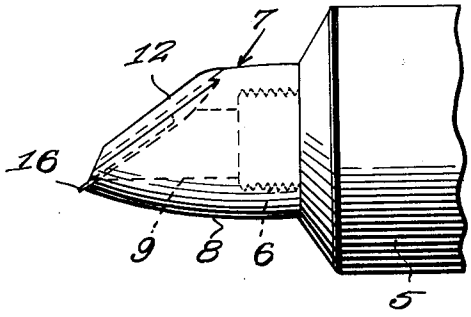

Fig. 3.

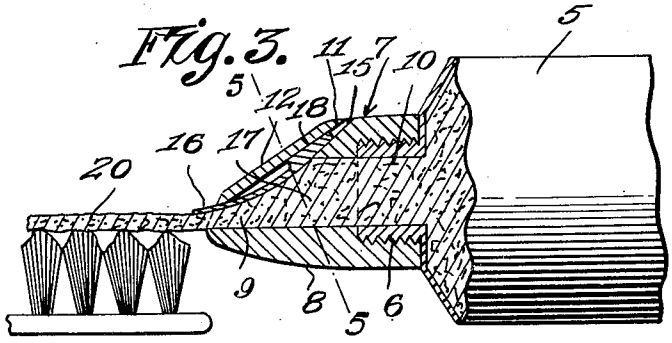

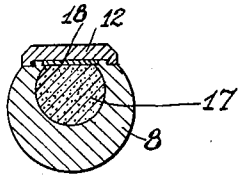

Fig. 5.

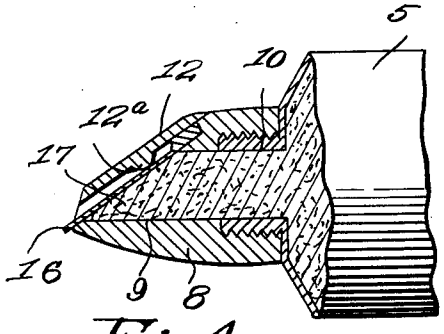

Fig. 4.

George A. Gleason, INVENTOR

BY Victor J. Evans & Co. ATTORNEY

Patented Oct. 11, 1932 1,881,488

UNITED STATES PATENT OFFICE

GEORGE A. GLEASON, OF NEW YORK, N. Y.

SELF-CLOSING CAP FOR COLLAPSIBLE TUBES

Application filed July 10, 1931. Serial No. 549,983.

This invention relates to self-closing caps for collapsible tubes such, for example, as toothpaste tubes and shaving cream tubes.

The invention will be fully and comprehensively understood from a consideration of the following detailed description when read in connection with the accompanying drawing which forms part of the application, with the understanding, however, that the improvement is capable of extended application and is not confined to the exact showing of the drawing nor to the precise construction described and, therefore, such changes and modifications may be made therefrom as do not affect the spirit of the invention nor exceed the scope thereof as expressed in the appended claims.

In the drawing:

Fig. 1 is a front elevation of the self-closing cap of my invention and of a collapsible tube to which the cap is secured.

Fig. 2 is a side elevation of the mentioned cap and of part of a collapsible tube to which the cap is attached.

Fig. 3 is a view showing paste being extruded from a collapsible tube through the cap of my invention and applied to a tooth brush, the cap being shown in vertical section and the tube partly in vertical section; and

Fig. 4 is a view showing a modified construction of the cap of my invention, the cap being shown in vertical section and shown secured to the collapsible tube which is fragmentarily shown and which is partly in section.

Fig. 5 is a sectional view on the plane indicated by the line 5—5 of Fig. 3.

Referring to the drawing for a more detailed description thereof, the numeral 5 indicates a collapsible tube having a threaded neck 6, to which is threadedly connected a cap 7. The cap 7 may, if desired, be made integral with the tube 5. The mentioned cap comprises a tubular member 8 having a longitudinal aperture 9 therethrough, said aperture 9 being in alignment with the opening 10 in the neck 6 of the collapsible tube. The opening 9 is preferably round at its rear end portion, to conform to the round opening 10 of the neck 6, and is square at its outer portion.

The tubular member 8 is bevelled at its upper outer end portion, as indicated by the numeral 11, the bevel sloping downwardly toward the outer end thereof. A cover 12 lies on the bevelled face of the tubular member and is connected thereto by means of a dovetail connection, said cover being removable from said tubular member. The central part of the upper end of the bevelled face of the tubular member is formed to provide a surface 15 having a sharper bevel than the bevel 11, and to this surface 15 is secured a valve 16 which is adapted to close the opening 9 of the tubular member 8, the valve being in an inclined or oblique position and sloping downwardly toward the outer end of the tubular member to contact with the lower lip thereof. The surface 15 acts as a seat for the valve 16 and the latter is frictionally retained on this seat by the cover when attached, the cover frictionally engaging the valve. The valve 16 is herein shown as a resilient strip which yields to the pressure of the paste 17 when the same is forced through the cap by pressure on the collapsible tube 5. The valve 16, at its upper end, is pressed upon by the cover 12, as indicated by the numeral 18. The outer end of the aperture or passageway 9 is oblong in form due to the bevel of the tubular member 8 and the inclination of the cover 7 so that paste issuing from the outer end of the passageway is in the form of a ribbon 20, as shown in Fig. 3.

The modification shown in Fig. 4 is similar to the construction shown in Figs. 1, 2 and 3, except that in the mentioned Fig. 4 the undersurface of the cover 12 is provided with a boss or projection 12*a*, which contacts with the valve 16 on the upper surface of the latter and functions as a fulcrum for the same, and is effective, by shortening, in effect, the valve 16, to reduce the resiliency thereof and increase the resistance of the valve to opening.

What is claimed as new is:

1. A device of the character indicated comprising a tubular member beveled on one end, a cover slidably mounted upon but having an interlocking connection with said beveled face, and a resilient valve disposed on the bev-

eled face between said tubular member and said cover and normally closing the opening through said tubular member, the valve being frictionally engaged with the beveled face of the tubular member and with the cover.

2. A device of the character indicated comprising a tubular member beveled on one end, a cover slidably mounted upon but having an interlocking connection with said beveled face, and a resilient valve disposed on the beveled face between said tubular member and said cover and normally closing the opening through said tubular member, the valve being frictionally engaged with the beveled face of the tubular member and with the cover, the cover at the lower end terminating short of the adjacent side of the opening through the tubular member to permit deflection of the extremity of the valve around the edge of the cover by matter extruded through the tubular member.

In testimony whereof I hereby affix my signature.

GEORGE A. GLEASON.