US 20110296585A1

(19) United States

(12) Patent Application Publication

(10) Pub. No.: US 2011/0296585 A1

(43) Pub. Date: Dec. 8, 2011

Jenkins

(54) PATIENT CLOTHING SYSTEM FOR INCONTINENT INVALIDS

(76) Inventor: **Jacquelin P. Jenkins**, Chandler, AZ (US)

(21) Appl. No.: **12/794,728**

(22) Filed: **Jun. 5, 2010**

Publication Classification

(51) **Int. Cl.**

A41D 1/14	(2006.01)
A41D 27/20	(2006.01)
A41D 27/00	(2006.01)
A41D 1/06	(2006.01)

(52) **U.S. Cl.** **2/221**; 2/237; 2/247; 2/234

(57) **ABSTRACT**

A garment system for incontinent invalids, including bariatric patients, that has pants and dresses with common features including a diaper opening, elastic at and above the waistline, elastic fabric extendable across at least a middle portion of the back of the garment near the waist-line. The garments cover the crotch of the wearer while reclined or seated, and still provide caregivers easy access to diapers. The pants feature a rear elastic belt with first and second releasably fastenable belt ends. The dress may have releasably open shoulder seams and two-petal sleeves. Faux pockets, providing concealed openings through the garment for medical equipment are included. For the pants, the crotch seam extends far enough back to cover the crotch from view when the wearer is seated or reclining.

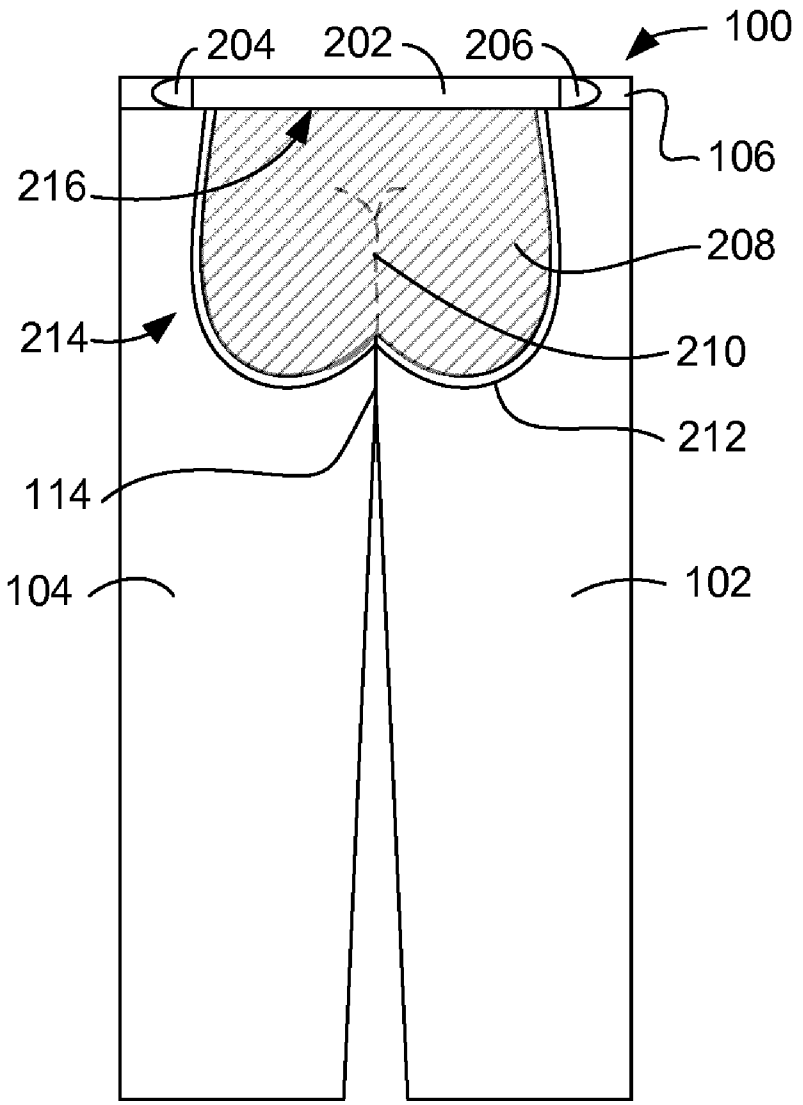

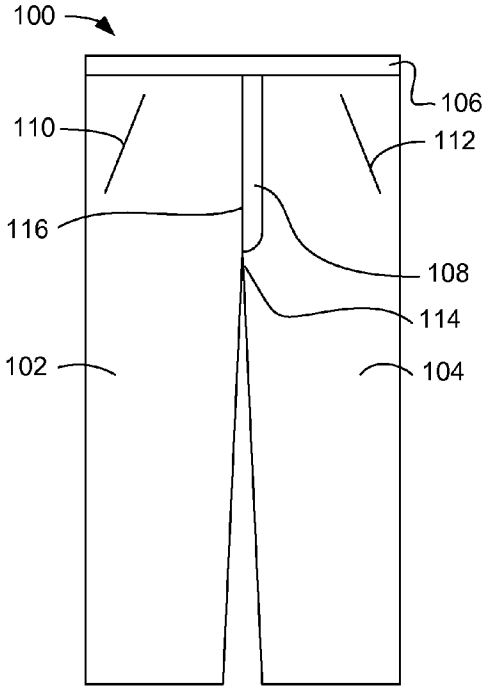

FIG. 1

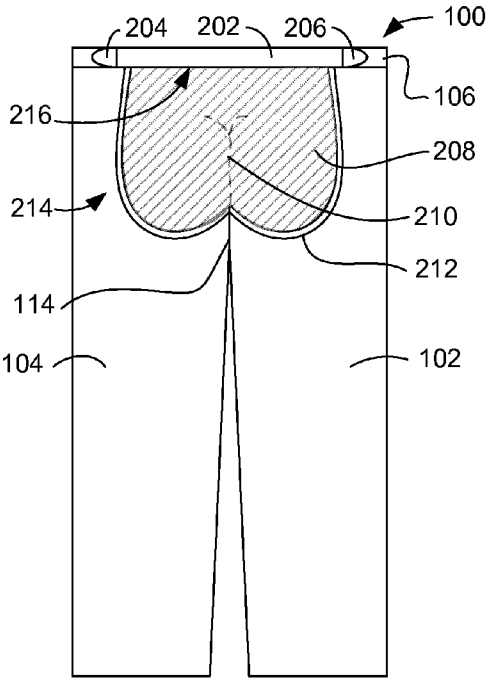

FIG. 2

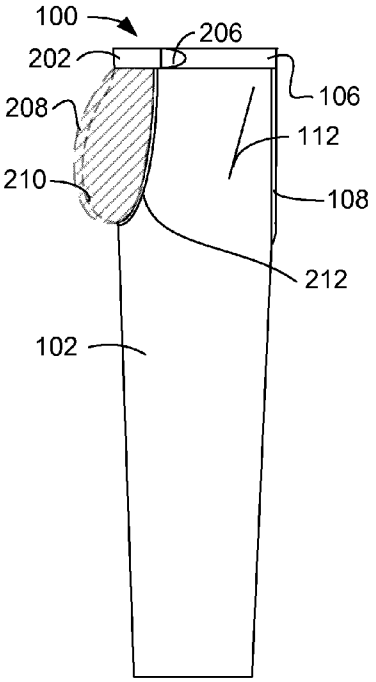

FIG. 3

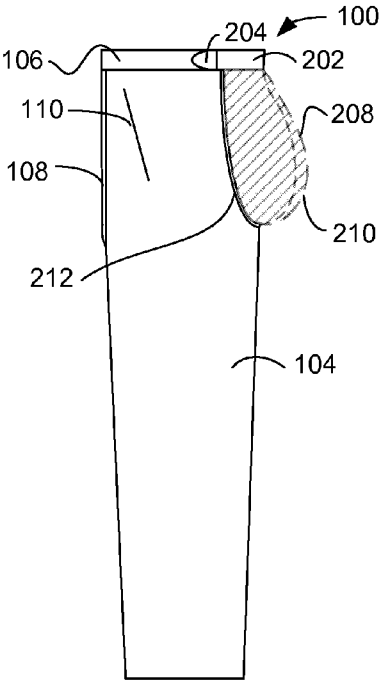

FIG. 4

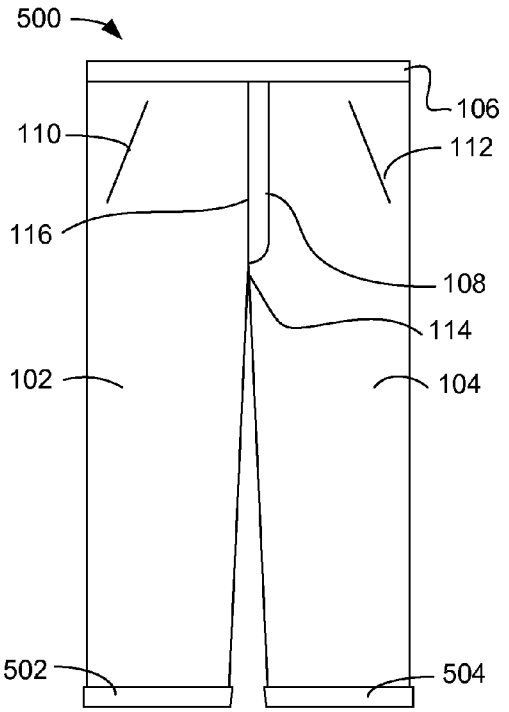

FIG. 5

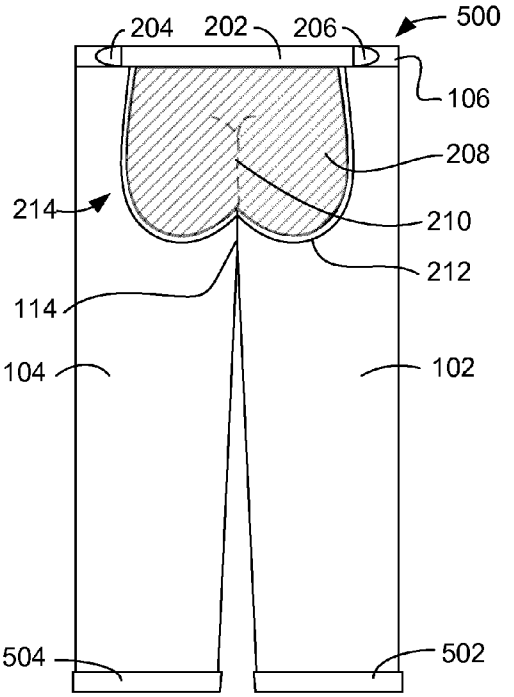

FIG. 6

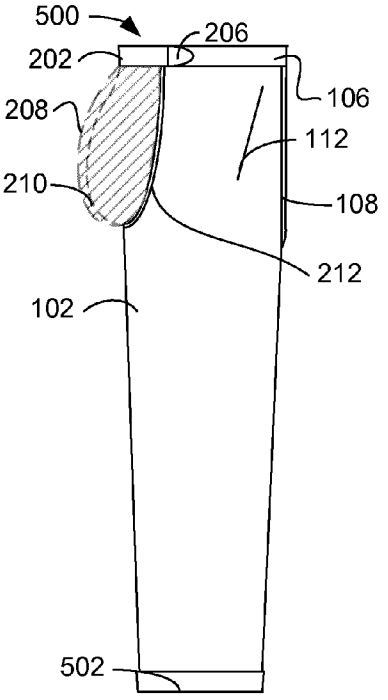

FIG. 7

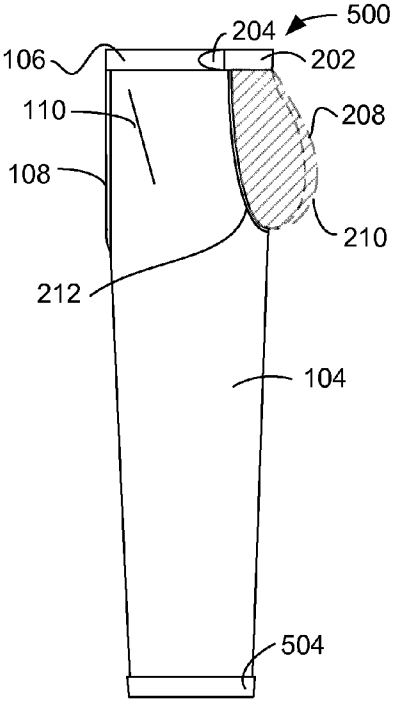

FIG. 8

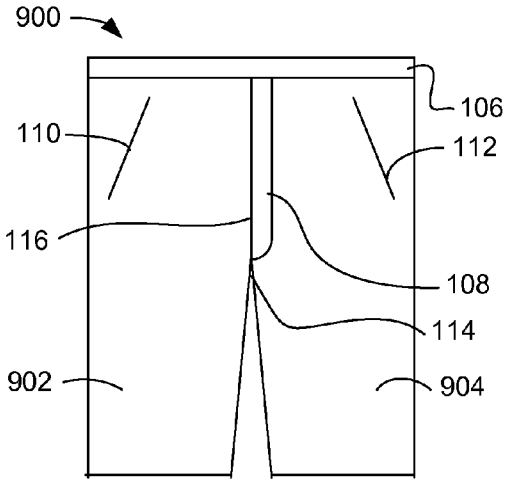

FIG. 9

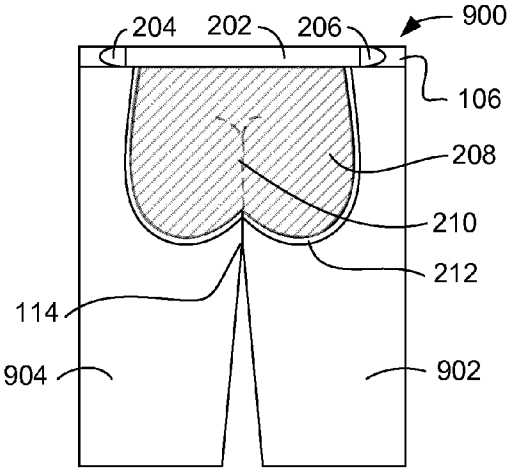

FIG. 10

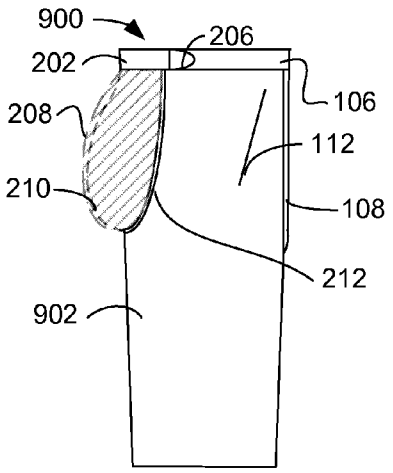

FIG. 11

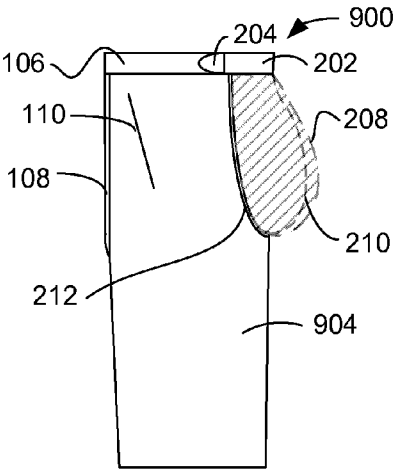

FIG. 12

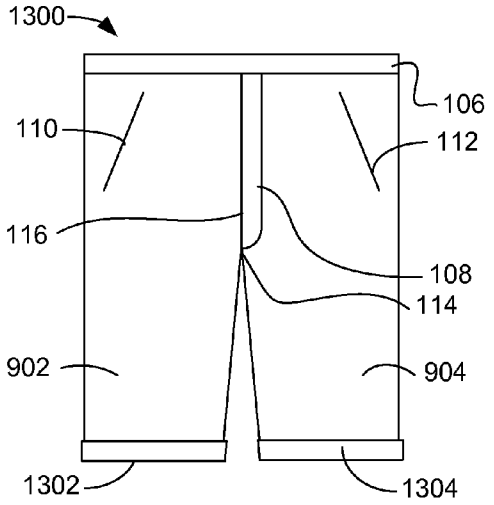

FIG. 13

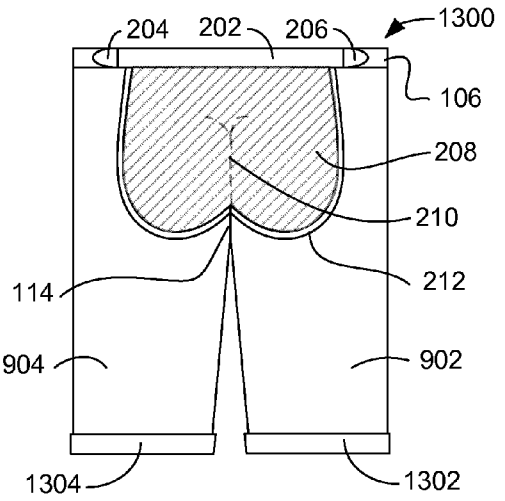

FIG. 14

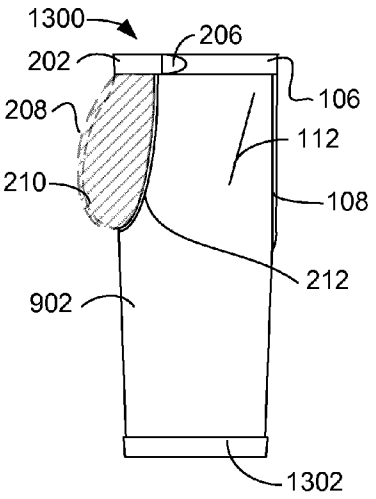

FIG. 15

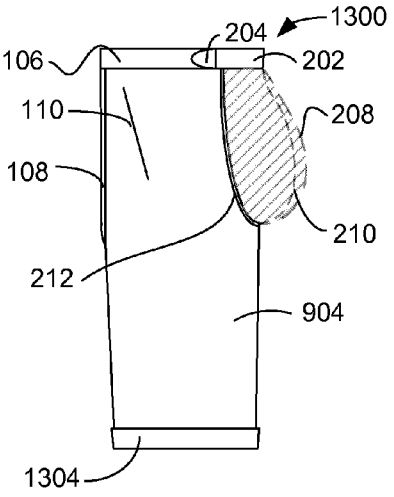

FIG. 16

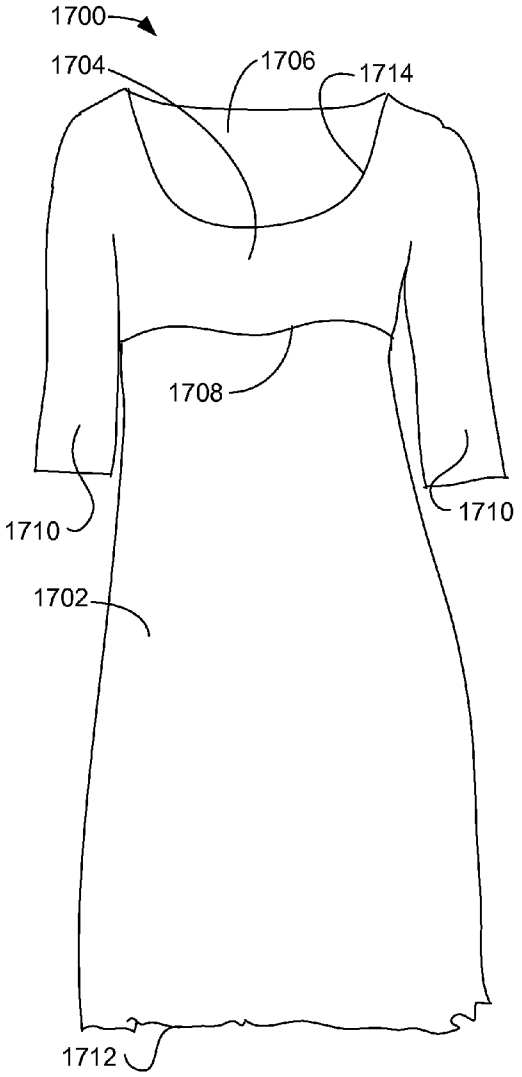
1700
1704
1706
1714
1708
1710
1710
1702
1712

FIG. 17

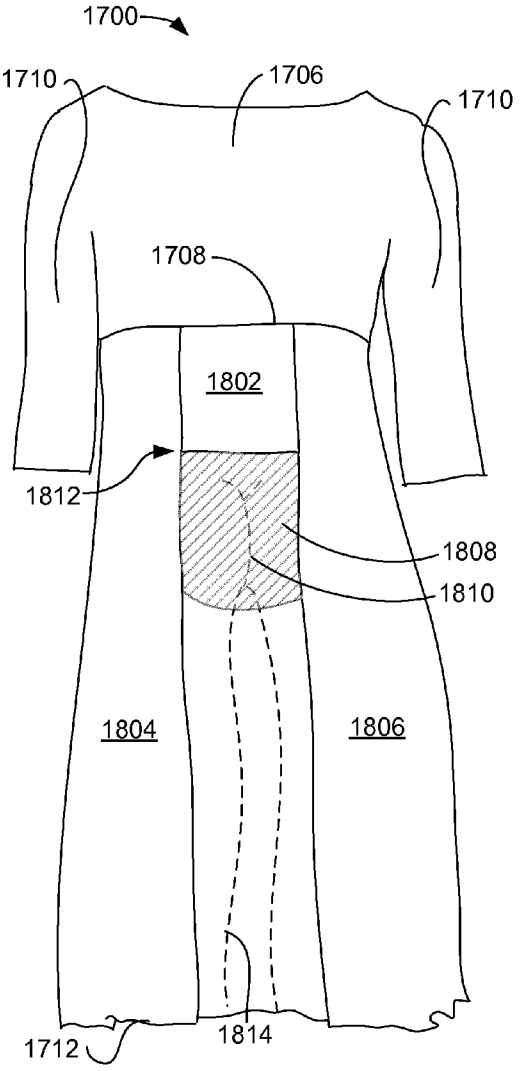
1700
1710
1706
1710
1708
1802
1812
1808
1810
1804
1806
1814
1712

FIG. 18

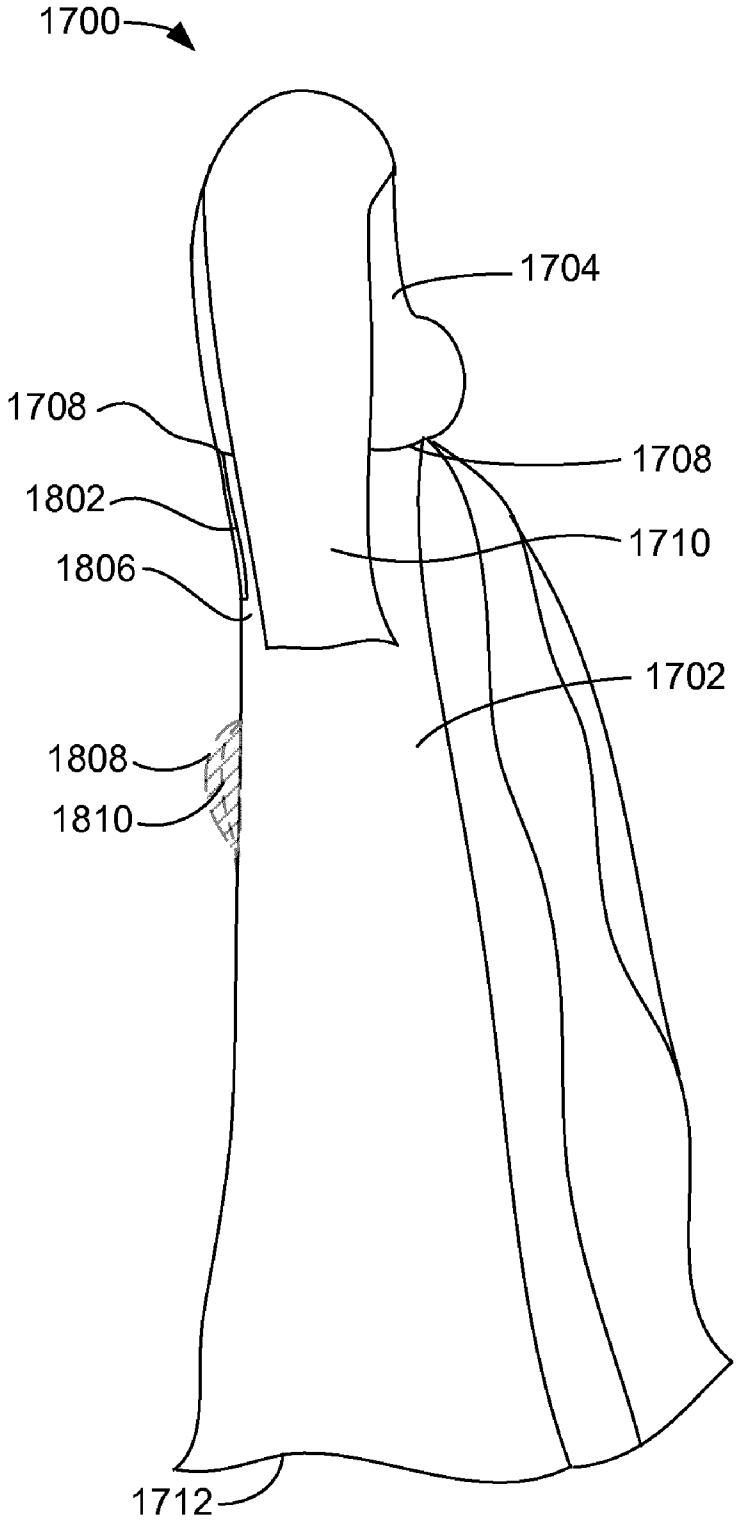

FIG. 19

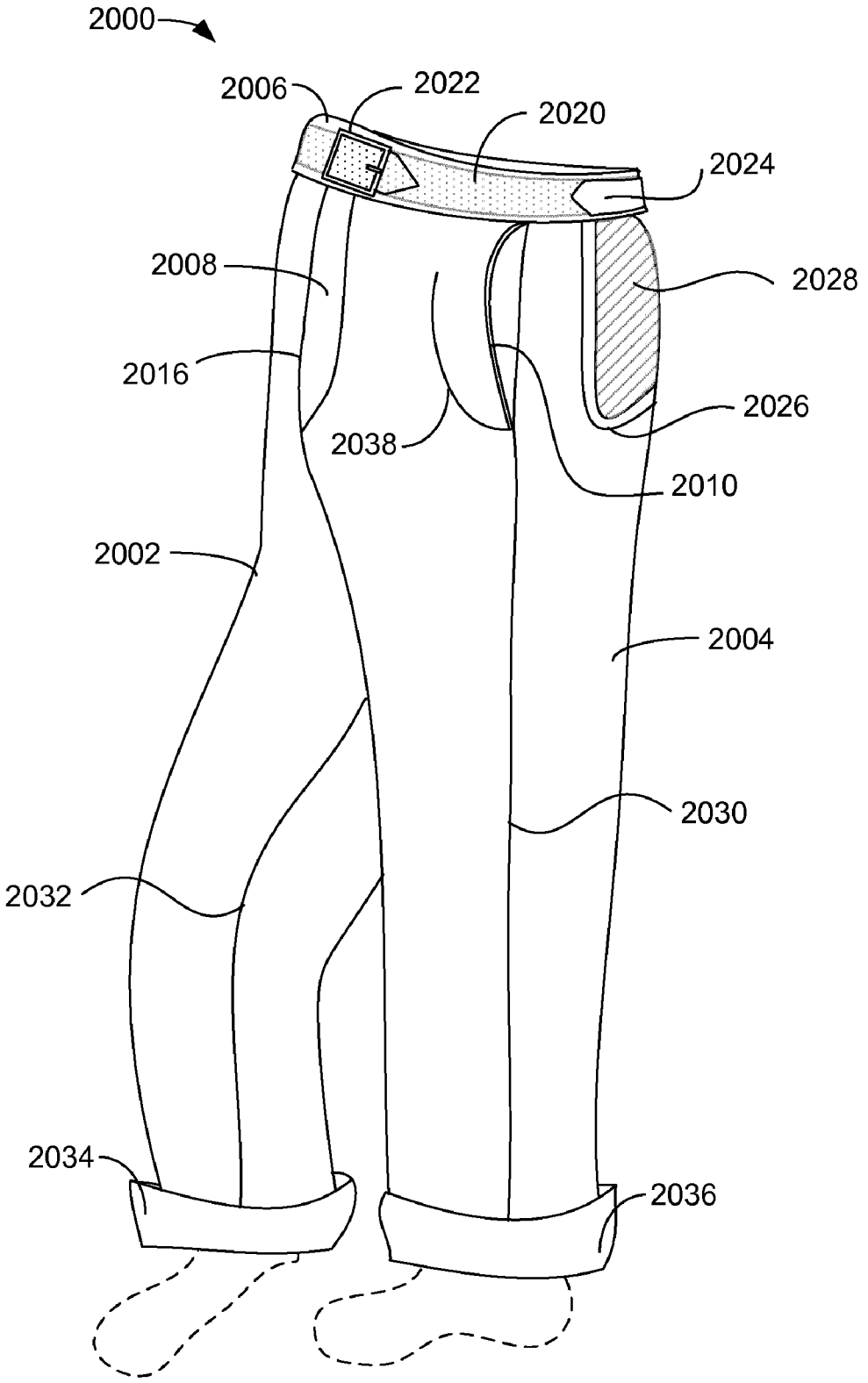
2000
2006
2022
2020
2024
2008
2028
2016
2026
2038
2010
2002
2004
2030
2032
2034
2036

FIG. 20

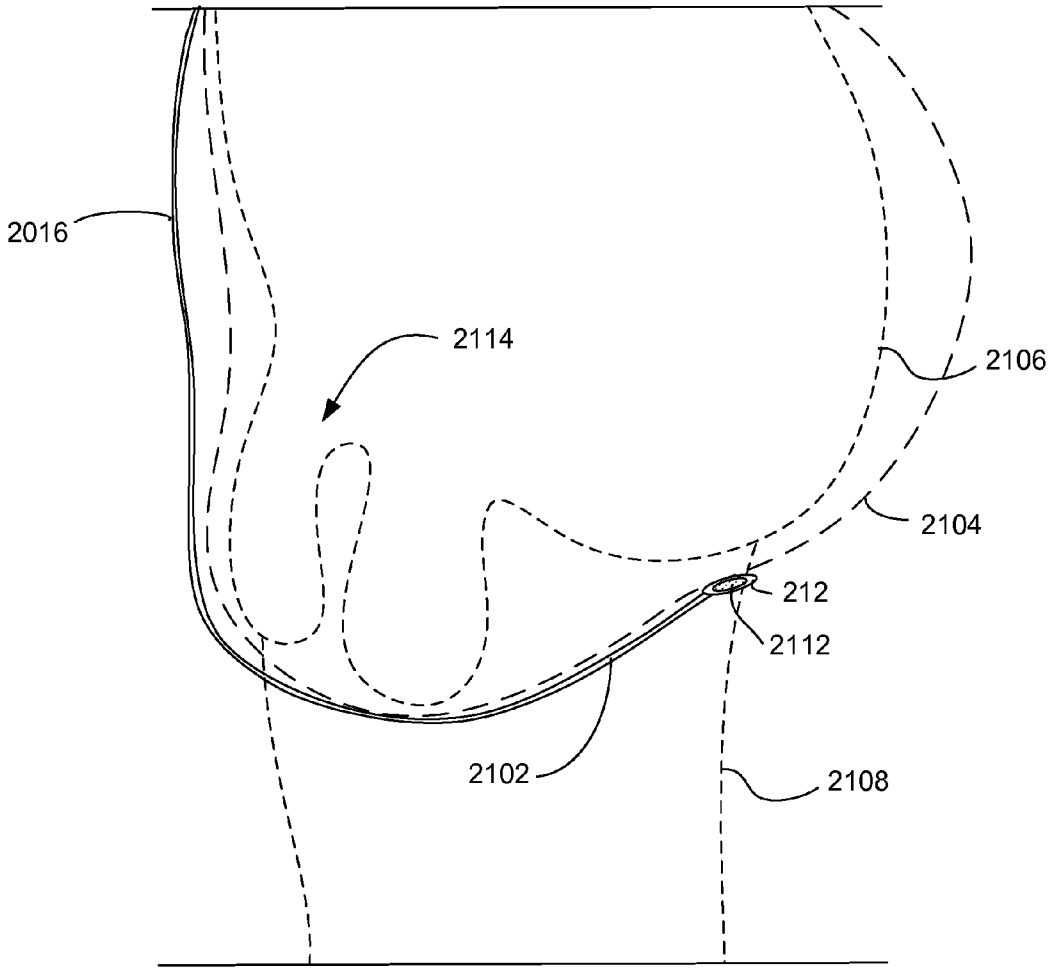

FIG. 21

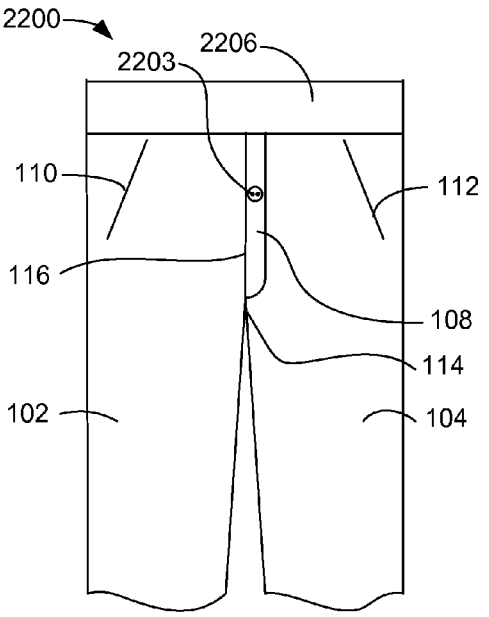

FIG. 22

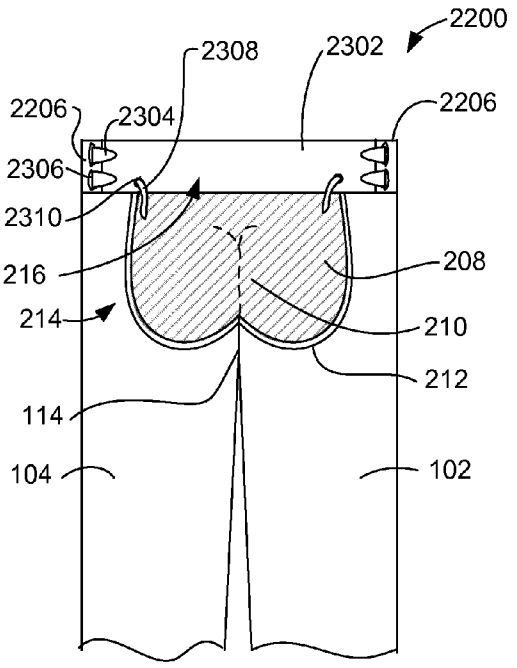

FIG. 23

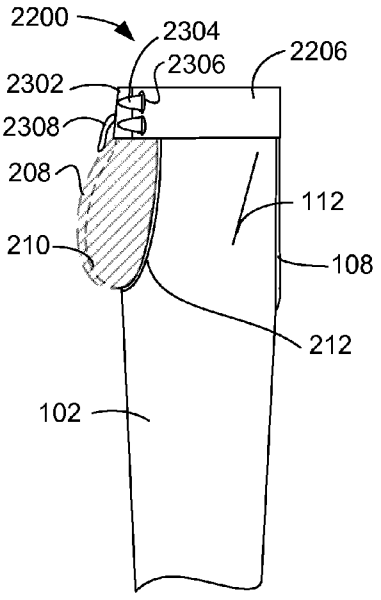

FIG. 24

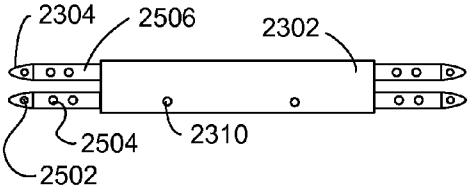

FIG. 25

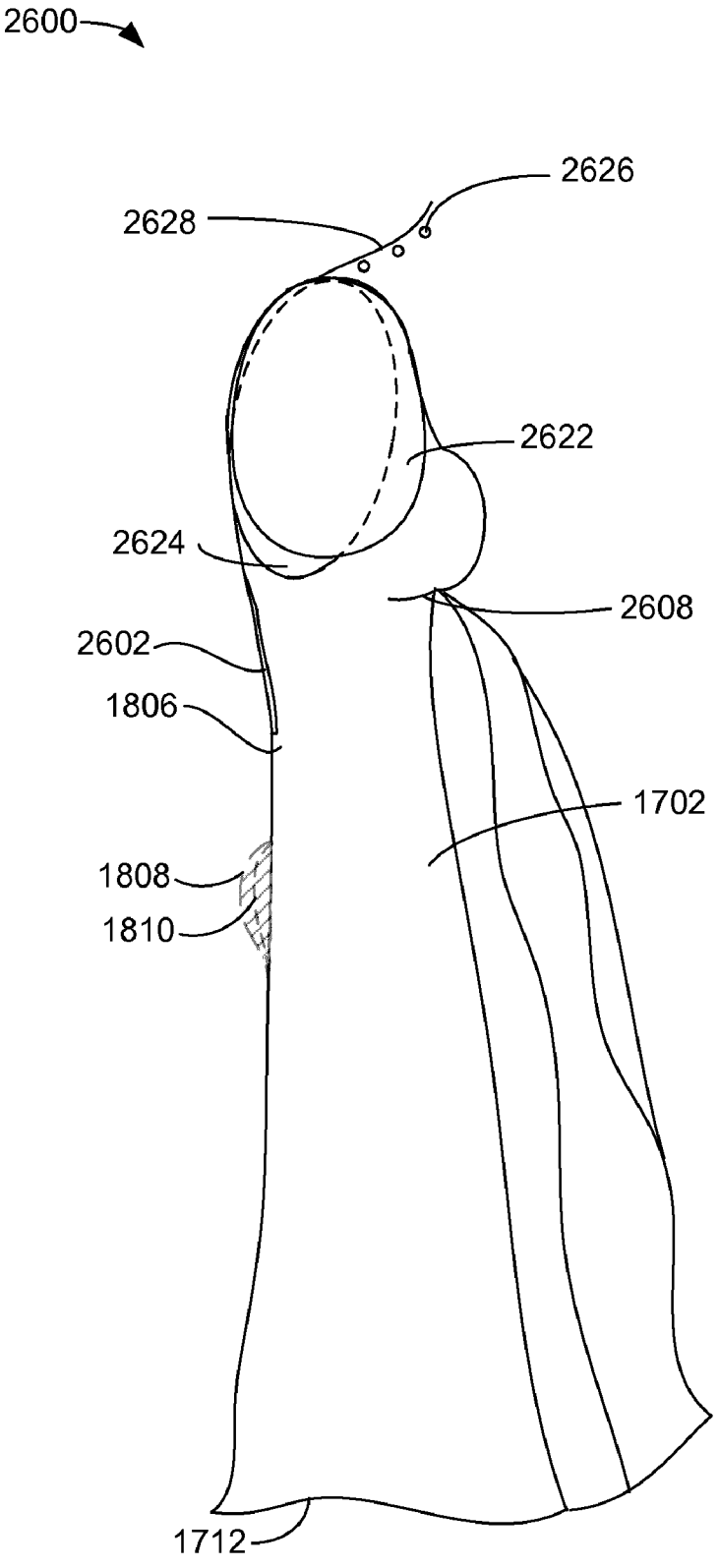

FIG. 26

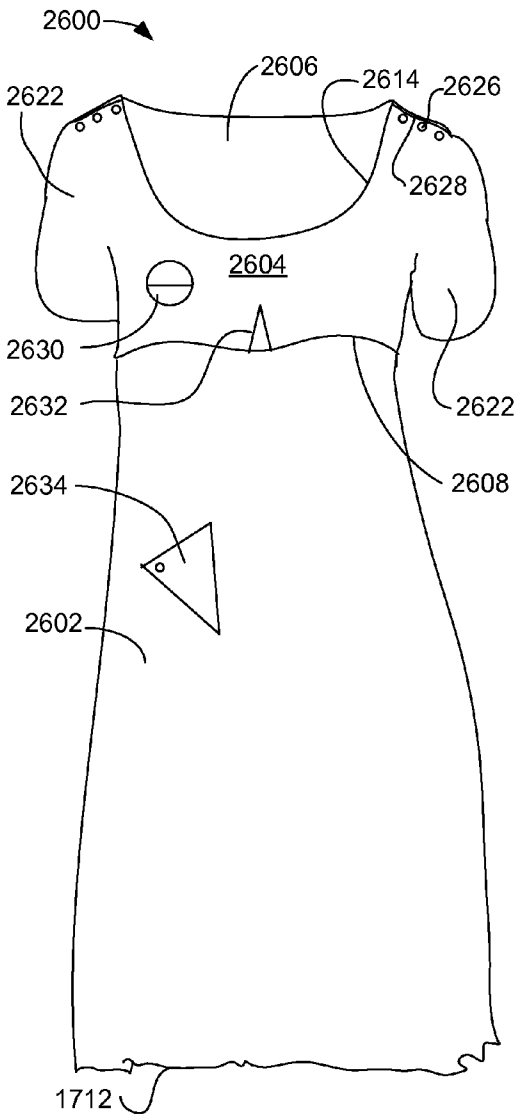
2600
2606
2614
2626
2622
2628
2604
2630
2632
2622
2634
2608
2602
1712

FIG. 27

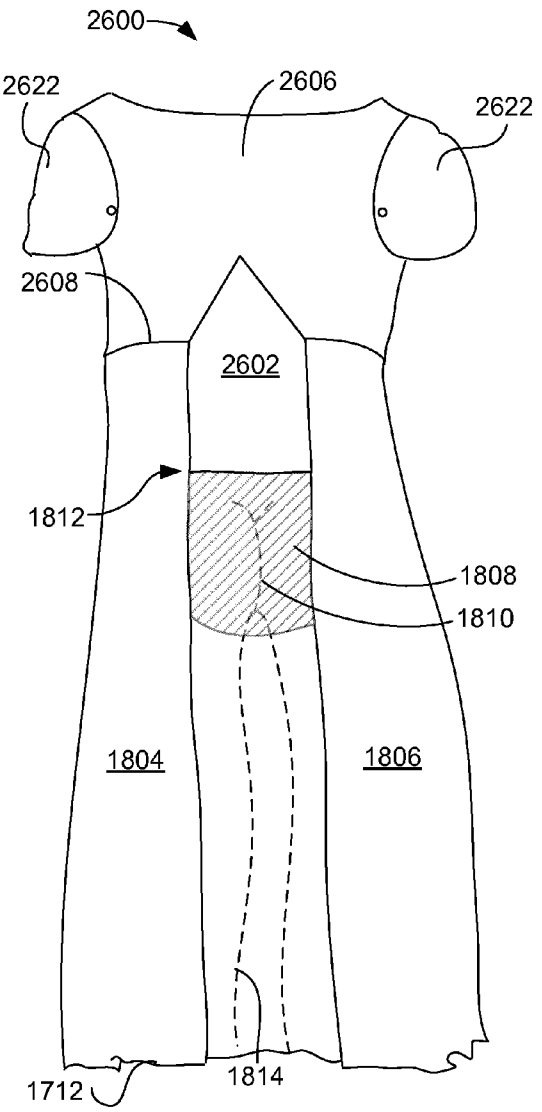
2600
2622
2606
2622
2608
2602
1812
1808
1810
1804
1806
1814
1712

FIG. 28

PATIENT CLOTHING SYSTEM FOR INCONTINENT INVALIDS

FIELD OF THE INVENTION

[0001] This invention relates to clothing for bedridden or wheelchair-bound patients with incontinency. This invention further relates to clothing for bariatric patients.

BACKGROUND

[0002] Incontinent invalids present hygiene challenges for nursing care personnel, whether in the home or in a nursing facility and this is especially true for bariatric (morbidly obese) patients. The challenges include access, and especially the amount of physical effort needed to move the patient, undress the patient, remove a soiled diaper, clean the patient, install a new diaper, and dress the patient. The nursing home staff engages significant risks of personal injury, especially back strains and the like, which translate into higher operational and insurance costs. Bariatric patients, for example, may range in weight from 300 to 1200 pounds. From the patient perspective, dignity is a serious issue. Hospital gowns and some functionally improved garments for invalid patients often do not provide a dignified appearance for the patient. There is a long-felt need for a solution that satisfies both the patient and the nursing staff.

[0003] The quest for the solution has produced several patented inventions. U.S. Pat. No. 4,651,346 to Hale for a LAP HUGGER teaches a frontal sheet tied at the waist on one side and having a back sheet on the lower portion of the front panel that has a vertical seam forming two leg sleeves. Hale does not teach the use of a diaper with the LAP HUGGER.

[0004] U.S. Pat. No. 4,383,335 to Slocum for a ROBE ADAPTED FOR INCONTINENT INDIVIDUALS teaches a robe having a full length front panel, a reclosable vertical opening in an upper rear panel between the neck and the waist, no covering for the buttocks, and wrap-around back bottom panels for leg coverings.

[0005] U.S. Pat. No. 2,010,483 to Goodman for an UNDERGARMENT FOR WOMEN teaches and open-crotch undergarment with a rear flap for sitting.

[0006] U.S. Pat. No. 5,283,909 to Hill for a LAP HUGGER teaches a single cavity for covering both legs, with the legs covered not quite to the buttocks in the rear and the cover coming all the way to the waist in front. Wings on either side of the front panel are wrapped around the sides for privacy.

[0007] Therefore, a need exists for clothing for both men and women who are incontinent invalids that provides ease in undressing, accommodates a diaper, protects patient privacy in a bed or a wheelchair, preserves the patient's dignity, endures industrial washing machines at nursing homes, and looks, to a guest or visitor, just like regular cloths.

OBJECTS AND FEATURES OF THE INVENTION

[0008] A primary object and feature of the present invention is to overcome the above-mentioned problems and fulfill the above-mentioned needs.

[0009] Another object and feature of the present invention is to provide a clothing system for men and women who are incontinent invalids that preserves the patients dignity in a wheelchair or a bed. Another object and feature of the present invention is to provide such a clothing system that makes nursing care of incontinent invalids easier for the care giver. Another object and feature of the present invention is to provide such a clothing system that accommodates a diaper. Another object and feature of the present invention is to provide such a clothing system that looks like ordinary clothing to a casual observer of the patient in a wheelchair or a bed.

[0010] It is an additional primary object and feature of the present invention to provide an egg spinner that is efficient, inexpensive, easy to clean, and handy. Other objects and features of this invention will become apparent with reference to the following descriptions.

SUMMARY OF THE INVENTION

[0011] In accordance with a preferred embodiment hereof, this invention provides clothing for men and women who are incontinent invalids. Such clothing provides ease in undressing, accommodates a diaper, protects patient privacy in a bed or a wheelchair, preserves the patient's dignity, endures industrial washing machines at nursing homes, and looks, to a guest or visitor, just like regular cloths.

[0012] A garment for wear by a human incontinent invalid, including: a diaper opening in the seat of the garment able to accommodate partial exposure of a seat portion of a diaper there through, where the diaper opening has a top edge near a waist-engageable portion of the garment, where the waist-engageable portion is able to engage a waist of such wearer; elastic fabric able to extend across at least a middle portion of the back of the garment near the waist-engageable portion; and fabric extending outwardly from a second portion of the diaper opening and able to form a covering for a left side, a right side, and a front of the wearer's legs and a front of such wearer's crotch when the garment is being worn by the wearer in a seated or reclined position. The garment, where the garment includes a pant. The garment, where the elastic fabric includes an elastic belt having first and second releasably fastenable belt ends, and where the first releasably fastenable belt end is able to releasably fasten to one of a right side and a left side of the pants near the waist of the pant and the second releasably fastenable belt end is able to releasably fasten to one of the left side and the right side, respectively, of the pants near the waist of the pant. The garment, further including a diaper opening hem on a portion of a perimeter of the diaper opening. The garment, where the diaper opening hem encloses elastic material. The garment, where the pant includes a fly having a fly seam, where the fly seam extends into a crotch seam that extends to the diaper opening hem. The garment, further including a pocket; a fake pocket opening; a pant fly; a fake pant fly; a pant cuff; a front fake belt portion; and/or a front fake belt buckle. The garment, where the garment includes a dress. The garment, where the elastic fabric includes a sewn-in elastic panel above a waist-engageable portion of the dress and extending a third of the way to a neck line of the dress. The garment, where the diaper opening extends the length of the dress below the waist-engageable portion of the dress. The garment, where the dress has an empire waist. The garment, further including: sleeves; two-petal sleeves, a collar; a hem; a pocket; a faux pocket providing a concealed opening through the dress; and/or a fake pocket opening.

[0013] A garment for wear by a human incontinent invalid, including: a diaper opening in the seat of the garment able to accommodate partial exposure of a seat portion of a diaper there through, where the diaper opening has a top edge near a waist-engageable portion of the garment, where the waist-engageable portion is able to engage a waist of such wearer; elastic fabric able to extend across at least a middle portion of

the back of the garment near the waist-engageable portion; fabric extending outwardly from a second portion of the diaper opening and able to form a covering for a left side, a right side, and a front of the wearer's legs and a front of such wearer's crotch when the garment is being worn by the wearer in a seated or reclined position; and the garment is one of a pant and a dress. The garment, where the elastic fabric able to extend across at least a middle portion of the back of the garment near the waist-engageable portion includes: an elastic belt having first and second releasably fastenable belt ends; and/or a sewn-in elastic panel above a waist-engageable portion of the garment. The garment, where the fabric extending outwardly from a second portion of the diaper opening includes one of: a crotch seam of a pant or a front panel of a dress. The garment, where the diaper opening includes a hem. The garment, where the diaper opening hem encloses elastic material. The garment, further including: a pocket; a fake pocket opening; a pant fly; a fake pant fly; a pant cuff; a front fake belt portion; a front fake belt buckle; sleeves; two-petal sleeves; a faux pocket providing a concealed opening through the garment; a collar; an elastic belt having two ends, where each end is fastenable to a waist band of the garment; a hem; and/or an empire waist. The garment, where the garment is sized, shaped, and arranged for a bariatric patient.

[0014] A garment for wear by a human incontinent invalid, including: a diaper opening in the seat of the garment able to accommodate partial exposure of a seat portion of a diaper there through, where the diaper opening has a top edge near a waist-engageable portion of the garment, where the waist-engageable portion is able to engage a waist of such wearer; elastic fabric able to extend across at least a middle portion of the back of the garment near the waist-engageable portion; fabric extending outwardly from a second portion of the diaper opening and able to form a covering for a left side, a right side, and a front of the wearer's legs and a front of such wearer's crotch when the garment is being worn by the wearer in a seated or reclined position; the garment is one of a pant and a dress and is sized, shaped, and arranged for a bariatric patient; where the elastic fabric able to extend across at least a middle portion of the back of the garment near the waist-engageable portion includes one of: an elastic belt having first and second releasably fastenable belt ends; and a sewn-in elastic panel above a waist-engageable portion of the garment; where the pant includes: a fly seam assisting in joining left and right legs of the pant; a diaper opening in a seat of the pant, the diaper opening having a diaper opening hem on a perimeter of the diaper opening below a top edge of the diaper opening; and/or a crotch seam extending from the fly seam to the diaper opening hem, where the diaper opening hem encloses an elastic band; where the dress includes: the elastic fabric able to extend across at least a middle portion of the back of the garment near the waist-engageable portion including a sewn-in elastic panel above the waist-engageable portion of the dress and extending at least a third of the way to a neck line of the dress and a third of the width of a back of such user; and an empire waist.

BRIEF DESCRIPTION OF THE DRAWINGS

[0015] The above and other objects and advantages of the present invention will become more apparent from the following description taken in conjunction with the following drawings in which:

[0016] FIG. **1** is a front elevation view illustrating an exemplary pair of pants for an incontinent invalid, according to a preferred embodiment of the present invention;

[0017] FIG. **2** is a rear elevation view illustrating the exemplary pair of pants for an incontinent invalid, according to the preferred embodiment of FIG. **1**;

[0018] FIG. **3** is a right side elevation view illustrating the exemplary pair of pants for an incontinent invalid, according to the preferred embodiment of FIG. **1**;

[0019] FIG. **4** is a left side elevation view illustrating the exemplary pair of pants for an incontinent invalid, according to the preferred embodiment of FIG. **1**;

[0020] FIG. **5** is a front elevation view illustrating a second exemplary pair of pants for an incontinent invalid, according to a preferred embodiment of the present invention;

[0021] FIG. **6** is a rear elevation view illustrating the exemplary pair of pants for an incontinent invalid, according to the preferred embodiment of FIG. **5**;

[0022] FIG. **7** is a right side elevation view illustrating the exemplary pair of pants for an incontinent invalid, according to the preferred embodiment of FIG. **5**;

[0023] FIG. **8** is a left side elevation view illustrating the exemplary pair of pants for an incontinent invalid, according to the preferred embodiment of FIG. **5**;

[0024] FIG. **9** is a front elevation view illustrating an exemplary pair of shorts for an incontinent invalid, according to a preferred embodiment of the present invention;

[0025] FIG. **10** is a rear elevation view illustrating the exemplary pair of shorts for an incontinent invalid, according to the preferred embodiment of FIG. **9**;

[0026] FIG. **11** is a right side elevation view illustrating the exemplary pair of shorts for an incontinent invalid, according to the preferred embodiment of FIG. **9**;

[0027] FIG. **12** is a left side elevation view illustrating the exemplary pair of shorts for an incontinent invalid, according to the preferred embodiment of FIG. **9**;

[0028] FIG. **13** is a front elevation view illustrating a second exemplary pair of shorts for an incontinent invalid, according to a preferred embodiment of the present invention;

[0029] FIG. **14** is a rear elevation view illustrating the exemplary pair of shorts for an incontinent invalid, according to the preferred embodiment of FIG. **13**;

[0030] FIG. **15** is a right side elevation view illustrating the exemplary pair of shorts for an incontinent invalid, according to the preferred embodiment of FIG. **13**;

[0031] FIG. **16** is a left side elevation view illustrating the exemplary pair of shorts for an incontinent invalid, according to the preferred embodiment of FIG. **13**;

[0032] FIG. **17** is a front elevation view illustrating an exemplary dress for an incontinent invalid, according to a preferred embodiment of the present invention;

[0033] FIG. **18** is a rear elevation view illustrating the exemplary dress for an incontinent invalid, according to the embodiment of FIG. **17**;

[0034] FIG. **19** is a side elevation view illustrating the exemplary dress for an incontinent invalid, according to the embodiment of FIG. **17**;

[0035] FIG. **20** is a front-side perspective view illustrating another exemplary embodiment of pants, according to a preferred embodiment of the present invention;

[0036] FIG. **21** is a bilateral cross-sectional view through the crotch seam illustrating according to a preferred embodiment of the present invention;

[0037] FIG. **22** is a front elevation view illustrating an exemplary pair of pants for an incontinent invalid, according to another preferred embodiment of the present invention;

[0038] FIG. **23** is a rear elevation view illustrating the exemplary pair of pants for an incontinent invalid, according to the preferred embodiment of FIG. **22**;

[0039] FIG. **24** is a right side elevation view illustrating the exemplary pair of pants for an incontinent invalid, according to the preferred embodiment of FIG. **22**;

[0040] FIG. **25** is a rear elevation view illustrating an exemplary wide elastic belt, for use with the pants of FIG. **22**, for an incontinent invalid, according to the preferred embodiment of FIG. **22**;

[0041] FIG. **26** is a side elevation view illustrating the exemplary dress for an incontinent invalid, according to another preferred embodiment of the present invention;

[0042] FIG. **27** is a front elevation view illustrating an exemplary dress for an incontinent invalid, according to the preferred embodiment of FIG. **26**; and

[0043] FIG. **28** is a rear elevation view illustrating the exemplary dress for an incontinent invalid, according to the embodiment of FIG. **26**.

DETAILED DESCRIPTION OF THE BEST MODES AND PREFERRED EMBODIMENTS OF THE INVENTION

[0044] FIG. **1** is a front elevation view illustrating an exemplary pair of pants **100** for an incontinent invalid, according to a preferred embodiment of the present invention. Pants **100** have a right leg **102** (from the wearer's perspective) and a left leg **104** joined by a waist band **106**, a crotch seam **114**, and a fly **108**. In an alternate embodiment, waist band **106** may have belt loops (not shown). Fly **108** may be a functioning fly **108** (such as with a zipper, buttons, hook and loop fasteners, or the like) or may be a fake fly **108** that does not open. Fake fly seam **116** joins legs **102** and **104** together and extends to become crotch seam **114**. Right pocket **110** and left pocket **112** may be real or fake pockets **110**, **112**. The pockets **110**, **112** may be of any known design, but are preferably large enough to accommodate the hands and reach of bariatric patients. An essential feature of pants **100** is that they appear, from frontal view, to be normal pants **100**. Crotch seam **114**, which assists in joining legs **102** and **104** together, extends back far enough that when the patient is seated with legs apart, the patient's crotch is covered from frontal view by the pants **100**.

[0045] The materials for pants **100** should be selected for durability in industrial laundering processes, for the application of the invention to institutional environments, such as hospitals. Denim and canvas fabrics are preferred. Colored and patterned fabrics are useful for improving the patient's state of mind, and so are preferred.

[0046] FIG. **2** is a rear elevation view illustrating the exemplary pair of pants **100** for an incontinent invalid, according to the preferred embodiment of FIG. **1**. Pants **100** have an opening **216** to accommodate partial exposure of a diaper **208** that covers, among other things, the patient's buttocks **210**. Opening **214** is bounded below and on the sides by diaper opening hem **212** and is bounded on the top when elastic belt **202** is fastened in place. In a particular embodiment, diaper opening hem **212** encloses a strip of elastic material, that is biased to constrain diaper opening hem **212** when elastic belt **202** is attached to waist band **106**. Crotch seam **114** ends at diaper opening hem **212**. Elastic belt **202** has first and second releasably fastenable belt ends **204** and **206** which attach to waist band **106**, preferably by hook and loop fasteners. The first and second releasably fastenable belt ends **204**, **206** assist in removing the pants **100** for changing a diaper, as the elastic belt **202** can be disconnected at both ends with little or no side-to-side rolling of the patient. Reduced rolling reduces the care-giver workload and the risk of back injuries to the staff. In a particular embodiment, legs **102** and **104** may be hemmed.

[0047] FIG. **3** is a right side elevation view illustrating the exemplary pair of pants **100** for an incontinent invalid, according to the preferred embodiment of FIG. **1**. The side view of the patient standing will reveal part of the diaper **208**, but bariatric invalids do not stand. When reclining on a bed, the diaper **208** and buttocks **210** are pressed, by the weight of the patient, into the mattress sufficiently to conceal the diaper **208**. Pocket **112** and/or **110** may have a closure (not shown) for retaining elastic belt **202** during laundering.

[0048] FIG. **4** is a left side elevation view illustrating the exemplary pair of pants **100** for an incontinent invalid, according to the preferred embodiment of FIG. **1**. The right and left side views of the exemplary pair of pants **100** are preferably symmetrical. When the wearer is seated in a wheel chair, the diaper **208** is concealed from side and rear view. When the wearer is seated with legs apart, pants **100** cover the wearer's crotch from frontal view.

[0049] FIG. **5** is a front elevation view illustrating a second exemplary pair of pants **500** for an incontinent invalid, according to a preferred embodiment of the present invention. Pants **500** have right cuff **502** and left cuff **504**. Cuffs **502**, **504** may be of any conventional design. While the legs **102** and **104** are exemplified in the illustration as mildly tapered, other shapes are possible. For example and without limitation, the legs **102** and **104** may be un-tapered, reverse tapered, tapered below the knee, or bell bottoms.

[0050] FIG. **6** is a rear elevation view illustrating the exemplary pair of pants **500** for an incontinent invalid, according to the preferred embodiment of FIG. **5**. The shape of opening **214** is exemplary, and variations in the shape are within the scope of the present invention, within the constraints that the crotch seam **114** extends sufficiently behind the wearer's genitals to provide coverage while sitting or reclining with legs apart, that the sides of the wearer's legs are covered and the diaper **208** is concealed when the wearer is seated or reclined, and that the pants **100**, **500** remain removable after detachment of elastic belt **202** with little or no side-to-side rolling of the patient.

[0051] FIG. **7** is a right side elevation view illustrating the exemplary pair of pants **500** for an incontinent invalid, according to the preferred embodiment of FIG. **5**. Leg **102** is shown tapered in side aspect. Various shapes, discussed above, are within the scope of the present invention.

[0052] FIG. **8** is a left side elevation view illustrating the exemplary pair of pants **500** for an incontinent invalid, according to the preferred embodiment of FIG. **5**. Cuffs **502** and **504** may be larger than illustrated in the example, and may have various shapes, according to fashion preferences.

[0053] FIG. **9** is a front elevation view illustrating an exemplary pair of shorts **900** for an incontinent invalid, according to a preferred embodiment of the present invention. Legs **902** and **904** are shorter than legs **102** and **104**, respectively. Various lengths of legs **902** and **904** are within the scope of the present invention. The bottoms of legs **902** and **904** are preferably hemmed.

[0054] FIG. **10** is a rear elevation view illustrating the exemplary pair of shorts **900** for an incontinent invalid, according to the preferred embodiment of FIG. **9**. Other than the length of legs **902** and **904**, the shorts **900** have similar features, and variations thereof, as pants **100** and **500**. In all embodiments **100**, **500**, **900**, and **1300**, elastic belt **202** may be secured to the pants **100**, **500**, **900**, and **1300**, respectively, by a lanyard (not shown) to retain the belt with the pants **100**, **500**, **900**, and **1300** during laundering.

[0055] FIG. **11** is a right side elevation view illustrating the exemplary pair of shorts **900** for an incontinent invalid, according to the preferred embodiment of FIG. **9**. The range of sizes for pants **100**, **500**, **900**, and **1300** include sizes beyond those normally found on a rack at a department store, in order to accommodate bariatric patients up to twelve hundred pounds. Variations in shape to accommodate the unique body shapes of bariatric patients are within the scope of the present invention. Preferably, first and second releasably fastenable belt ends **204** and **206** are accessible to the care-giving staff with little rolling of the patient. More preferably, first and second releasably fastenable belt ends **204** and **206** are accessible to the care-giving staff with no rolling of the patient.

[0056] FIG. **12** is a left side elevation view illustrating the exemplary pair of shorts **900** for an incontinent invalid, according to the preferred embodiment of FIG. **9**. With releasably fastenable belt ends **204** and **206** released from the pants **100**, **500**, **900**, or **1300**, the pants **100**, **500**, **900**, and **1300** can be peeled downward toward the wearer's ankles to a position that enables changing the diaper **208**.

[0057] FIG. **13** is a front elevation view illustrating a second exemplary pair of shorts **1300** for an incontinent invalid, according to a preferred embodiment of the present invention. Shorts **1300** have right and left cuffs **1302** and **1304**, respectively, and are otherwise the same as shorts **900**.

[0058] FIG. **14** is a rear elevation view illustrating the exemplary pair of shorts **1300** for an incontinent invalid, according to the preferred embodiment of FIG. **13**. Stitching for pants **100**, **500**, **900**, and **1300** should be to industrial standards. Rough edges on seams and hems should be avoided, especially where contact with the plastic covering of the diaper **208** is concerned.

[0059] FIG. **15** is a right side elevation view illustrating the exemplary pair of shorts **1300** for an incontinent invalid, according to the preferred embodiment of FIG. **13**. The variations in size and shape, discussed above, apply to shorts **1300**.

[0060] FIG. **16** is a left side elevation view illustrating the exemplary pair of shorts **1300** for an incontinent invalid, according to the preferred embodiment of FIG. **13**. The variations in size and shape, discussed above, apply to shorts **1300**.

[0061] FIG. **17** is a front elevation view illustrating an exemplary dress **1700** for an incontinent invalid, according to a preferred embodiment of the present invention. Front panel **1702** preferably extends from an approximately ankle-length hem **1712** to an empire waist seam **1708**. In various alternate embodiments, various lengths of front panel **1702** may be used, within the constraint of having a length that will cover the crotch of the wearer when the wearer is seated or reclined. Bodice **1704** covers the front of the patient from the empire waist seam **1708** to the neck line **1714**. Exemplary sleeves **1710** are illustrated as full length, although sleeves of various lengths are within the scope of the invention. For changing the patient's cloths, shorter sleeves **1710** than those illustrated are preferred. The inside of back panel **1706** is visible.

[0062] FIG. **18** is a front elevation view illustrating the exemplary dress **1700** for an incontinent invalid, according to the embodiment of FIG. **17**. Back panel **1706** extends from the rear of neckline **1714** to the rear portion of the empire waist **1708**, and around side seams (not shown) with front panel **1704**. Sleeves **1710** extend from both front panel **1704** and back panel **1706**. Lower back side panels **1804** and **1806** may meet front panel **1702** at side seams (not shown) or may be extensions of front panel **1702**. Elastic panel **1802** extends downward from the empire waist seam **1708** to approximately the wearer's waist**1812**. Elastic panel **1802** also extends between left lower back side panel and right lower back side panel, for at least one-third of the width of the wearer's back, and preferably one-half the width (or more) of the wearer's back. Diaper **1808** covers, among other things, the wearer's buttocks **1810**. The diaper **1808** and the wearer's legs **1814** would be visible from the rear when standing, but not when the wearer is seated or reclined. Choice of materials and variations in shape and size are as varied as discussed above in regard to pants **100**, **500**, **900**, and **1300**.

[0063] In use, the front panel **1702** and back side panels **1804** and **1806** are pulled up toward the wearer's head to enable changing the diaper **1808**. Elastic panel **1802** simplifies removal of the dress **1700** for laundering and simplifies putting the dress on after laundering.

[0064] FIG. **19** is a side elevation view illustrating the exemplary dress **1700** for an incontinent invalid, according to the embodiment of FIG. **17**. While the side view is illustrated for a person of normal proportions, it should be understood that variations in size and shape for the unique sizes and shapes of bariatric patients are within the scope of the present invention. While the diaper **1808** is exposed in a standing side view, it is not visible when the wearer is seated or reclined.

[0065] FIG. **20** is a front-side perspective view illustrating another exemplary embodiment of pants **2000**, according to a preferred embodiment of the present invention. Waistband **206** supports fake belt **2020** with fake belt buckle **2022**. Releasably fastenable belt end **2024** fastens to fake belt **2020**, preferably by hook and loop fasteners. Right leg **2002** shows right leg inner side seam **2032** and cuff **2034**. The right leg outer side seam for leg **2002** is not visible in this view, but exists. Left leg **2004** shows left leg outer side seam **2030** and cuff **2036**. The left leg inner side seam for leg **2004** is not visible in this view, but exists. Fly **2008** is preferably fake and decorative. Pocket edge hem **2010** and outer side seam **2030** define a pocket opening. Pocket seam **2038** defines the extent of the pocket. Diaper opening hem **2026** preferably encloses an elastic band. Choice of materials and variations in shape and size are as varied as discussed above in regard to pants **100**, **500**, **900**, and **1300**.

[0066] FIG. **21** is a partial bilateral cross-sectional view through the crotch seam **2102** illustrating a feature of pants **100**, **500**, **900**, **1300**, and **2000**, according to preferred embodiments of the present invention. Crotch seam **2102**, **114** is an extension of fake fly seam **2016**, **116** and extends around a front portion of diaper **2104**, past genitals **2114**, to diaper opening hem **212** which encloses elastic band **2112**. Buttocks **2106** and leg **2108** are included for reference.

[0067] FIG. **22** is a front elevation view illustrating an exemplary pair of pants **2200** for an incontinent invalid, according to another preferred embodiment of the present invention. This embodiment features a wide (vertically) waist band **2206** and a button **2203**, which may be part of a button closure or may be decorative.

[0068] FIG. **23** is a rear elevation view illustrating the exemplary pair of pants **2200** for an incontinent invalid, according to the preferred embodiment of FIG. **22**. Wide waist band **2206** is sized to extend partially around the sides of the wearer and features button-hole-like openings **2306** (one of four labeled) near each end of the wider waist band **2206**. Wide elastic belt **2302** is wider than elastic belt **202**, and has straps **2506** (see FIG. **25**, one of four labeled) ending in tabs **2304** (one of four labeled). Elastic belt **2302** also has openings **2310** (one of two labeled) for extension of elastic filament **2308** (one of two ends labeled) which is threaded through hem **212**. Access to the ends of elastic filament **2308** enables the caregiver to adjust the tension on the elastic filament **2308** for buttocks **210** of various sizes.

[0069] FIG. **24** is a right side elevation view illustrating the exemplary pair of pants **2200** for an incontinent invalid, according to the preferred embodiment of FIG. **22**. Wide elastic belt **2202** fits underneath the ends of wide waistband **2206**, and the tabs **2304** are manually threaded through buttonholes **2306** and fastened in place, as will be discussed further below.

[0070] FIG. **25** is a rear elevation view illustrating an exemplary wide elastic belt **2302**, for use with the pants **2200** of FIG. **22**, for an incontinent invalid, according to the preferred embodiment of FIG. **22**. Wide elastic belt **2302** has two pairs of straps **2506** ending in tabs **2304**, which may be one piece with the strap **2506**. Each tab **2304** has a first fastener part **2502** (one of four labeled) adapted to fasten to second fastener part **2504**, one of eight labeled. Fasteners **2502**/**2504** may be of any two-part type, such as snaps or hook and loop fasteners. In an alternate embodiment, second fastener parts **2504** may on the wide elastic belt **1302** proper. A plurality of aligned second fastener parts **2504** enables adjustment of the effective length of the wide elastic belt **2302**. The straps **2506** may be one piece with the wide elastic belt **2302**.

[0071] FIG. **26** is a side elevation view illustrating the exemplary dress **2600** for an incontinent invalid, according to another preferred embodiment of the present invention. Dress **2600** features two-part sleeves **2622**, **2644**, two-part bodice **2604**, **2606**, and a triangular extension of rear elastic panel **2602**. Each sleeve has a front petal **2622** and a rear petal **2624**. In operation, the rear petal **2624** is wrapped forward over the patient's upper arm and the front petal **2622** is wrapped rearward over the rear petal **2624** and fastened in the back. Two-petal sleeves are particularly useful for patients who cannot lift their arms over their head, and for providing easy access for installing or maintaining a picc line in the patient.

[0072] FIG. **27** is a front elevation view illustrating an exemplary dress **2600** for an incontinent invalid, according to the preferred embodiment of FIG. **26**. Front bodice section **2604** is sewn to the back bodice section **2606** along the sides but not at the shoulders. At the shoulders, front bodice **2604** is fastenable to rear bodice **2606** using fasteners **2626** (one of six labeled) to form releasable seam **2628** (one of two labeled). In operation, the releasable shoulder seams **2828** are initially open as the dress **2600** is pulled down over the patient's head, upper body, and arms. The dress **2600** is then raised under the patient's non-moving arms, and the releasable shoulder seams **2628** are closed to form the bodice **2604**, **2606**. The remainder of the dress **2600** can then be pulled down over the patient using partial rolling techniques known in the art.

[0073] Pocket **2630** provides access for various medical equipment, as it opens through the dress **2600**, as do pockets **2632** and **2634**.

[0074] FIG. **28** is a rear elevation view illustrating the exemplary dress for an incontinent invalid, according to the embodiment of FIG. **26**. The upper triangular portion of elastic panel **2602** considerable eases dressing the patient. The upper triangular portion of the rear elastic panel **2602** extends above the empire waist **2608** of the dress **2600**.

[0075] While the present invention is primarily for bedridden invalids, it is also useful for wheelchair-bound patients. The garments of the present invention may be made in various sizes, colors, and fashions to suit various patients' needs. For example, fashions popular with teenagers may be applied to the present invention for a wheelchair-bound teenager.

[0076] The illustrations are of exemplary embodiments and do not limit the claims below. Although applicant has described applicant's preferred embodiments of this invention, it will be understood that the broadest scope of this invention includes modifications such as diverse shapes, sizes, and materials. Such scope is limited only by the below claims as read in connection with the above specification. Further, many other advantages of applicant's invention will be apparent to those skilled in the art from the above descriptions and the below claims.

What I claim is:

1. A garment for wear by a human incontinent invalid, comprising:

a. a diaper opening in the seat of said garment operable to accommodate partial exposure of a seat portion of a diaper there through, wherein said diaper opening has a top edge proximate a waist-engageable portion of said garment, wherein said waist-engageable portion is operable to engage a waist of such wearer;

b. elastic fabric operable to extend across at least a middle portion of the back of said garment proximate said waist-engageable portion; and

c. fabric extending outwardly from a second portion of said diaper opening and operable to form a covering for a left side, a right side, and a front of said wearer's legs and a front of such wearer's crotch when said garment is being worn by said wearer in a seated or reclined position.

2. The garment of claim **1**, wherein said garment comprises a pant.

3. The garment of claim **2**, wherein said elastic fabric comprises an elastic belt having first and second releasably fastenable belt ends, wherein:

a. said first releasably fastenable belt end is operable to releasably fasten to one of a right side and a left side of said pants proximate said waist of said pant and

b. said second releasably fastenable belt end is operable to releasably fasten to one of said left side and said right side, respectively, of said pants proximate said waist of said pant.

4. The garment of claim **2**, further comprising a diaper opening hem on a portion of a perimeter of said diaper opening.

5. The garment of claim **4**, wherein said diaper opening hem encloses elastic material.

6. The garment of claim **4**, wherein said pant comprises a fly having a fly seam, wherein said fly seam extends into a crotch seam that extends to said diaper opening hem.

7. The garment of claim **2**, further comprising at least one of:
a. at least one pocket;
b. at least one fake pocket opening;
c. a pant fly;
d. a fake pant fly;
e. at least one pant cuff;
f. a front fake belt portion; and
g. a front fake belt buckle.

8. The garment of claim **1**, wherein said garment comprises a dress.

9. The garment of claim **8**, wherein said elastic fabric comprises a sewn-in elastic panel above a waist-engageable portion of said dress and extending at least one third of the way to a neck line of said dress.

10. The garment of claim **8**, wherein said diaper opening extends the length of said dress below the waist-engageable portion of said dress.

11. The garment of claim **8**, wherein said dress has an empire waist.

12. The garment of claim **8**, further comprising at least one of:
a. sleeves;
b. two-petal sleeves;
c. a collar;
d. a hem;
e. a pocket;
f. a faux pocket providing a concealed opening through said dress; and
g. a fake pocket opening.

13. A garment for wear by a human incontinent invalid, comprising:
a. a diaper opening in the seat of said garment operable to accommodate partial exposure of a seat portion of a diaper there through, wherein said diaper opening has a top edge proximate a waist-engageable portion of said garment, wherein said waist-engageable portion is operable to engage a waist of such wearer;
b. elastic fabric operable to extend across at least a middle portion of the back of said garment proximate said waist-engageable portion;
c. fabric extending outwardly from a second portion of said diaper opening and operable to form a covering for a left side, a right side, and a front of said wearer's legs and a front of such wearer's crotch when said garment is being worn by said wearer in a seated or reclined position; and
d. said garment is one of a pant and a dress.

14. The garment of claim **13**, wherein said elastic fabric operable to extend across at least a middle portion of the back of said garment proximate said waist-engageable portion comprises one of:
a. an elastic belt having first and second releasably fastenable belt ends; and
b. a sewn-in elastic panel above a waist-engageable portion of said garment.

15. The garment of claim **13**, wherein said fabric extending outwardly from a second portion of said diaper opening comprises one of:
a. a crotch seam of a pant; and
b. a front panel of a dress.

16. The garment of claim **13**, wherein said diaper opening comprises a hem.

17. The garment of claim **16**, wherein said diaper opening hem encloses elastic material.

18. The garment of claim **13**, further comprising at least one of:
a. at least one pocket;
b. at least one fake pocket opening;
c. a pant fly;
d. a fake pant fly;
e. at least one pant cuff;
f. a front fake belt portion;
g. a front fake belt buckle;
h. sleeves;
i. two-petal sleeves;
j. a faux pocket providing a concealed opening through said garment;
k. a collar;
l. an elastic belt having two ends, wherein each end is fastenable to a waist band of said garment;
m. a hem; and
n. an empire waist.

19. The garment of claim **13**, wherein said garment is sized, shaped, and arranged for a bariatric patient.

20. A garment for wear by a human incontinent invalid, comprising:
a. a diaper opening in the seat of said garment operable to accommodate partial exposure of a seat portion of a diaper there through, wherein said diaper opening has a top edge proximate a waist-engageable portion of said garment, wherein said waist-engageable portion is operable to engage a waist of such wearer;
b. elastic fabric operable to extend across at least a middle portion of the back of said garment proximate said waist-engageable portion;
c. fabric extending outwardly from a second portion of said diaper opening and operable to form a covering for a left side, a right side, and a front of said wearer's legs and a front of such wearer's crotch when said garment is being worn by said wearer in a seated or reclined position;
d. said garment is one of a pant and a dress and is sized, shaped, and arranged for a bariatric patient;
e. wherein said elastic fabric operable to extend across at least a middle portion of the back of said garment proximate said waist-engageable portion comprises one of:
i. an elastic belt having first and second releasably fastenable belt ends; and
ii. a sewn-in elastic panel above a waist-engageable portion of said garment;
f. wherein said pant comprises:
i. a fly seam assisting in joining left and right legs of said pant;
ii. a diaper opening in a seat of said pant, said diaper opening having a diaper opening hem on a perimeter of said diaper opening below a top edge of said diaper opening;
iii. a crotch seam extending from said fly seam to said diaper opening hem, wherein said diaper opening hem encloses an elastic band;
g. wherein said dress comprises:
i. said elastic fabric operable to extend across at least a middle portion of the back of said garment proximate said waist-engageable portion comprising a sewn-in elastic panel above said waist-engageable portion of said dress and extending at least one third of the way to a neck line of said dress and at least one-third of the width of a back of such user; and
ii. an empire waist.

* * * * *