Feb. 24, 1931. J. W. MYERS 1,793,954

THERMOSTATIC APPARATUS

Filed May 16, 1927

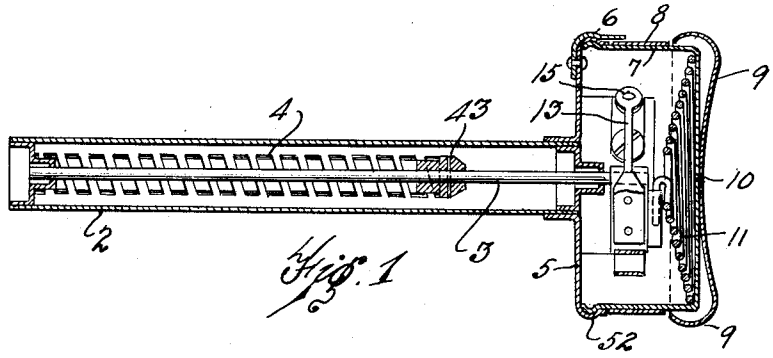

Fig. 1

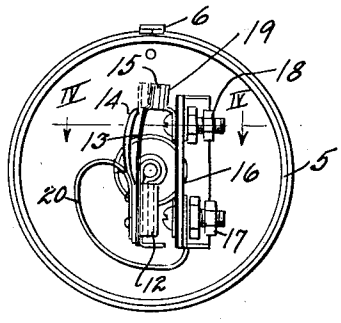

Fig. 3

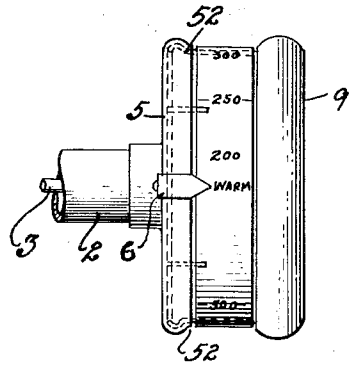

Fig. 2

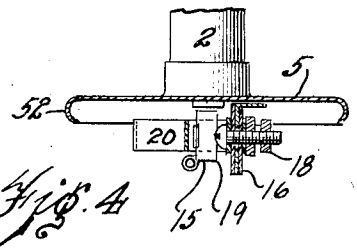

Fig. 4

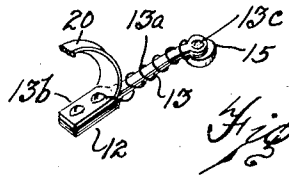

Fig. 5

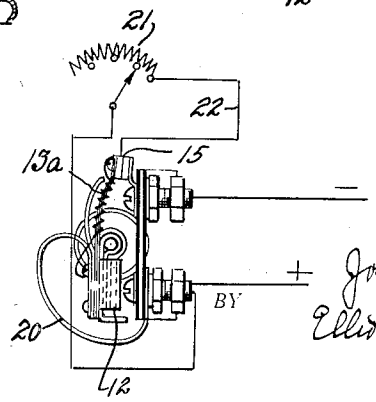

Fig. 6

INVENTOR.
Joseph W. Myers
BY
Elliott Woodward
ATTORNEY.

Patented Feb. 24, 1931 1,793,954

UNITED STATES PATENT OFFICE

JOSEPH W. MYERS, OF JACKSON, MICHIGAN

THERMOSTATIC APPARATUS

Application filed May 16, 1927. Serial No. 191,621.

My invention relates to a thermostatic apparatus, and an object of my improvements is to provide a simple and easily adjusted apparatus that is inexpensive to manufacture, that shall positively, certainly and effectively make a circuit at one prescribed temperature and break it at another prescribed temperature. I secure this object in the device illustrated in the accompanying drawing, in which:

Figure 1 is a longitudinal sectional view of an apparatus embodying my invention.

Figure 2 is a side elevation of the right hand portion of the same.

Figure 3 is an elevation, looking from the right of Figure 1, with parts removed to show the interior construction.

Figure 4 is a sectional plan view of the construction of Figure 3.

Figure 5 is a perspective view of a part of the device detached, illustrating a modified construction.

Figure 6 is a diagram illustrating a modification of the construction.

2 is a cylindrical casing. 3 is a rod located within the casing 2 coaxial therewith and adapted to be rotated therein. The rod 3 extends through the right hand end of the casing 2 in a joint permitting it to freely rotate. 4 is a bimetallic strip wound in the form of a spiral surrounding the rod 3 attached to the casing 2 at its left hand end and to the rod 3 at 43 at its right hand end. The strip 4 will be acted upon by a change of temperature to rotate the rod 3.

5 is a plate secured to the right hand end of the casing 2 and having its periphery turned to form a coaxial flange 52, making of the plate 5 with its upturned flange a cup like construction opening away from the casing 2. 7 is a cylinder closed at its right hand end and having its open left hand end fitted and beaded into the flange 52 so as to be rotatable therein, but held from axial motion relative thereto. 8 is a metal band, having a scale on its outer surface fitting around the periphery of the cylinder 7. 6 is a pointer secured to the plate 5 and having its end extending over the scale band 8. 9 is a plate riveted to the cylinder 7 coaxial therewith at its center and bending away from said cylinder and around the edge thereof. The plate 9 serves for a handle for rotating the cylinder 7, which will keep cooler than said cylinder and present a convenient periphery to be grasped by the hand. 11 is a conical torsional spring, one end of which is secured to the cylinder 7 and the other end to the right hand end of the rod 3. Thus by setting the cylinder 7 at different angular positions corresponding torsional forces are applied through said spring to the rod 3.

12 is a base plate secured to the right hand end of the rod 3. 13 is an arm of bimetalic metal extending from the plate 12 and having a contact piece 15 at its outer end. 14 is a rigid guard plate secured to the base plate 12 and adapted to limit the outward movement of the arm 13. 16 is a stationary plate secured to the plate 5 and provided with insulated binding posts 17 and 18. 19 is a contact plate extending from the binding post 18 and adapted to be contacted by the plate 15. 20 is a flexible conducting connection between the binding post 17 and the arm 13. The binding posts 17 and 18 are connected in the usual way in a circuit, which is made and broken by the contact and separating of the contacts 15 and 19.

The operation of the above described device is as follows:

If we assume that the contacts 15 and 19 are separated and we wish them to close at a certain temperature, the plate 9 is turned by the operator until the pointer 6 indicates the selected temperature on the scale of the plate 8. When the temperature has fallen sufficiently the spiral 4 acts upon the rod 3 to twist the same against the reaction of the spring 11 and bring the contact 15 in contact with 19, thus completing the circuit. The current passing through the arm 13 heats up said arm to a certain extent which causes it to tend to bend inward pressing the contact 15 harder against the contact 19. When the temperature rises, acting upon the strip 4 so as to tend to separate the contact plates 15 and 19, the separation of said plates takes place after the extra pressure, due to the bending of the arm 13 by its increased tem-

perature, has been overcome. The contacts 15 and 19 are then positively separated and the circuit is broken interrupting the current passing through the arm 13. Which is no longer heated thereby and therefore its temperature falls bending the arm outward to its first position.

Instead of passing the current directly through the metal of the arm 13 it may be passed through a coil of special metal 13*a* surrounding said arm and acting to heat the same, as shown in Figure 5, and in either case a short circuit 22 may be provided having a rheostat 21 therein, which may be adjusted to regulate the amount of current passing through the arm 13 with which it is in parallel circuit or through the coil 13*a*, as the case may be, to regulate the amount of flexing of said arm by the passing current.

What I claim is:

1. The combination of an electric circuit, coacting contacts in said circuit, a thermostat adapted to actuate said contacts to make and break said circuit and a part adapted to be heated by the current in said circuit when said contacts are in engagement so as to complete said circuit and adapted to be actuated by a changing of its temperature due to the current in said circuit, and to act to press said contacts together when heated by said current.

2. The combination of an electric circuit, coacting contacts in said circuit, a thermostat adapted to actuate said contacts to make and break said circuit and a part adapted to be heated by the current in said circuit when said contacts are in engagement so as to complete said circuit and adapted to be actuated by a changing of its temperature due to the current in said circuit, and to act to press said contacts together when heated by said current, and means for regulating the current heating said part whereby the temperature at which separation of the contacts occur is determined.

3. The combination of an electric circuit, coacting contacts in said circuit, a thermostat, a bimetallic arm adapted to be flexed by a change in its temperature due to the current in said circuit, said thermostat being adapted to actuate said arm to bring said contacts together, and separate the same, to make and break said circuit, a part of said circuit being adapted to heat said arm when said circuit is complete and said contacts are engaged and cause it to bend to press one contact towards the other whereby the temperature at which separation of the contacts occur is determined.

4. In combination with an electric circuit, a contact, a pivoted arm, a thermostat adapted to turn said arm about its pivot, a second contact carried by said arm adapted to cooperate with the first named contact, a torsion spring tending to turn said arm in the direction opposite to that of said thermostat and means adapted to be set to apply a required torsional stress to said spring.

5. The combination of a rod 3, an arm carried by said rod, a thermostat adapted to rotate said rod, a stationary contact, a cooperating contact carried by said arm, a casing enclosing said rod and arm, a part of the wall of said casing coaxial with said rod adapted to be set at various angular positions and a torsion spring secured to said rod and said part of the wall coaxial therewith.

6. The combination of a rod 3, a cylindrical casing enclosing said rod, a spiral thermostat surrounding said rod and secured thereto at one end and secured to the casing at the other end, a stationary contact, a cooperating contact carried by said rod, a rotatable part frictionally engaging said casing and forming an end thereof and a torsional spring engaging said rod and said part substantially as and for the purpose described.

In testimony whereof, I sign this specification.

JOSEPH W. MYERS.