(12) INTERNATIONAL APPLICATION PUBLISHED UNDER THE PATENT COOPERATION TREATY (PCT)

(19) World Intellectual Property Organization
International Bureau

(43) International Publication Date
2 October 2014 (02.10.2014)

WIPO | PCT

(10) International Publication Number
WO 2014/155347 A1

(51) International Patent Classification:
H05K 1/02 (2006.01) *F21K 99/00* (2010.01)

(21) International Application Number:
PCT/IB2014/060247

(22) International Filing Date:
28 March 2014 (28.03.2014)

(25) Filing Language: English

(26) Publication Language: English

(30) Priority Data:
PCT/CN2013/073500 29 March 2013 (29.03.2013) CN

(71) Applicant: **KONINKLIJKE PHILIPS N.V.** [NL/NL]; High Tech Campus 5, NL-5656 AE Eindhoven (NL).

(72) Inventors: **HSIAO, Ya-Kuang**; c/o High Tech Campus, Building 5, NL-5656 AE Eindhoven (NL). **LIU, Hai Tao**; c/o High Tech Campus, Building 5, NL-5656 AE Eindhoven (NL). **SUI, Lei**; c/o High Tech Campus, Building 5, NL-5656 AE Eindhoven (NL).

(74) Agents: **VAN EEUWIJK, Alexander Henricus Walterus** et al.; High Tech Campus Building 5, NL-5656 AE Eindhoven (NL).

(81) Designated States *(unless otherwise indicated, for every kind of national protection available)*: AE, AG, AL, AM, AO, AT, AU, AZ, BA, BB, BG, BH, BN, BR, BW, BY, BZ, CA, CH, CL, CN, CO, CR, CU, CZ, DE, DK, DM, DO, DZ, EC, EE, EG, ES, FI, GB, GD, GE, GH, GM, GT, HN, HR, HU, ID, IL, IN, IR, IS, JP, KE, KG, KN, KP, KR, KZ, LA, LC, LK, LR, LS, LT, LU, LY, MA, MD, ME,

[Continued on next page]

(54) Title: PRINTED CIRCUIT BOARD FOR A LIGHT EMITTING DIODE MODULE

(57) Abstract: The present invention relates to a light emitting module (208) comprising a plurality of light emitting elements (206), and a printed circuit board (102, 104, 200) being of a substantially elongated shape, the printed circuit board (102, 104, 200) comprising at least a first section comprising electrical connections and being configured for receiving at least one of said plurality of light emitting elements (206), and at least a second section comprising electrical connections, wherein the first section is wider than the second section and the printed circuit board is bent laterally to form a predetermined shape.

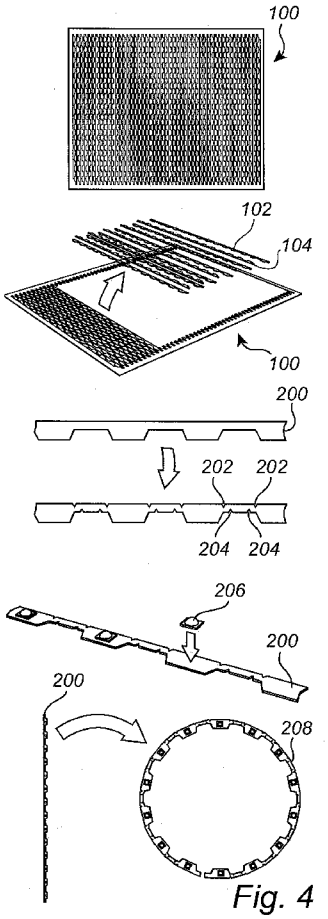

Fig. 4

WO 2014/155347 A1

MG, MK, MN, MW, MX, MY, MZ, NA, NG, NI, NO, NZ, OM, PA, PE, PG, PH, PL, PT, QA, RO, RS, RU, RW, SA, SC, SD, SE, SG, SK, SL, SM, ST, SV, SY, TH, TJ, TM, TN, TR, TT, TZ, UA, UG, US, UZ, VC, VN, ZA, ZM, ZW.

(84) Designated States *(unless otherwise indicated, for every kind of regional protection available)*: ARIPO (BW, GH, GM, KE, LR, LS, MW, MZ, NA, RW, SD, SL, SZ, TZ, UG, ZM, ZW), Eurasian (AM, AZ, BY, KG, KZ, RU, TJ, TM), European (AL, AT, BE, BG, CH, CY, CZ, DE, DK, EE, ES, FI, FR, GB, GR, HR, HU, IE, IS, IT, LT, LU, LV, MC, MK, MT, NL, NO, PL, PT, RO, RS, SE, SI, SK, SM, TR), OAPI (BF, BJ, CF, CG, CI, CM, GA, GN, GQ, GW, KM, ML, MR, NE, SN, TD, TG).

Declarations under Rule 4.17:

— *as to applicant's entitlement to apply for and be granted a patent (Rule 4.17(ii))*

— *as to the applicant's entitlement to claim the priority of the earlier application (Rule 4.17(iii))*

Published:

— *with international search report (Art. 21(3))*

PRINTED CIRCUIT BOARD FOR A LIGHT EMITTING DIODE MODULE

FIELD OF THE INVENTION

The invention relates to light emitting modules comprising printed circuit boards and light emitting elements, as well as a method for manufacturing light emitting modules comprising printed circuit boards and light emitting elements.

BACKGROUND OF THE INVENTION

Historically, most luminaires comprise conventional light sources such as incandescent light bulbs. However, nowadays many conventional light bulbs have been replaced with light emitting diodes (LED) in order to decrease energy consumption and environmental impact. The cost for a large luminaire, used in e.g. office and industry settings, with LEDs becomes significant partly due to the cost of the included printed circuit boards (PCBs). State of the art provides means for decreasing the cost of large LED luminaires by e.g. using low cost PCB materials such as CEM1 or using large PCBs to decrease the number of PCBs required in a luminaire, in turn reducing the amount of cables and connections between the PCBs. However, using large PCBs is also a cost driver.

In other PCB applications, there are examples of how a PCB panel can be efficiently utilized for creating a plurality of PCBs. One example, as shown in DE19712879, is to design a PCB with apertures, where the apertures can be used for another PCB. However, when it comes to luminaires, the light distribution is important, which is usually not a parameter to consider in other technologies. Accordingly, this complicates designing the PCB to be included in such a luminaire. Thus, it is desirable to decrease costs for PCBs comprised in luminaires.

SUMMARY OF THE INVENTION

The object of the invention is to decrease costs for a light emitting module, for example to be included in a luminaire, comprising a printed circuit board and a plurality of light emitting elements arranged on the printed circuit board.

The invention is based on the inventors' realization that a plurality of printed circuit boards may be formed from a (larger) printed circuit board panel, by optimizing the form of the printed circuit boards such that the amount of unused areas of the printed circuit board panel may be reduced. Accordingly, it is possible to optimize the physical size of the printed circuit board such that the printed circuit board requires less printed circuit board

material area per light emitting element, thereby decreasing the cost of the overall printed circuit board.

According to a first aspect of the invention, there is provided a light emitting module comprising a plurality of light emitting elements and a printed circuit board being of a substantially elongated shape, the printed circuit board comprising at least a first section comprising electrical connections and being configured for receiving at least one of the plurality of light emitting elements, and at least a second section comprising electrical connections, wherein the first section is wider than the second section and the printed circuit board is bent laterally to form a predetermined shape.

The purpose of the light emitting module may typically be to be used in a lighting application used in human environments, both indoors and outdoors, and the light emitting elements are the main components for providing light. The printed circuit board is preferably of a substantially elongated shape, having electrical connections and a designated area on which the light emitting elements are to be arranged. Accordingly, the printed circuit board comprises at least a first section comprising electrical connection and being configured to receive at least one light emitting element and at least a second section comprising electrical connections. Thus, the first section is selected to be wider than the second section, which enables a light emitting element to be arranged on the first section, and the second section being thinner than the first section and typically only comprising similar electrical connections as is provided at the first section.

Furthermore, the wider first section (compared to the second section) enables a pair of printed circuit boards to be arranged in a shifted manner relative to each other, and as such cover a substantially rectangular area of a larger printed circuit board, thereby enabling the use of a much larger portion of the larger printed circuit board panels when producing and separating printed circuit boards. The light emitting elements will, in use, produce heat to be transferred to (at least) the first wider section and will thus advantageously enable a relatively large area close to the light emitting elements to dissipate heat to the surrounding.

Moreover, according to the invention the printed circuit board is bent laterally, laterally meaning that the elongated printed circuit board is bent along the width i.e. perpendicular to the elongated direction. Bending the printed circuit board laterally will ensure that the light emitting elements are facing the same direction and will thereby provide sufficient light for lighting applications.

Preferably, the printed circuit board is bent laterally to a predetermined shape, where the predetermined shape will be decided by each application in which the light

emitting module will be used. Accordingly, one non-specific example could be to bend the printed circuit board such that the light emitting module would fit, by its final bent dimensions, into an ordinary office lighting fixture. Accordingly, in a preferred embodiment there is provided at least three first sections and at least three second sections, from which a relatively large degree of bending may be achieved such that the light emitting module is adaptable to many applications.

According to one embodiment of the invention, the first and the second sections may be provided alternating along the length of the elongated printed circuit board. Alternating the first and the second sections along the length of the printed circuit board will ensure that a similar bending angle is present along the length of the elongated printed circuit board. Furthermore, alternating the first and the second section will enable a uniform distribution of light emitting elements along the length of the elongated printed circuit board.

According to another embodiment of the invention, the predetermined shape comprises an arc portion. An arc portion means that a portion of the predetermined shape has the same radius of curvature. Different portions of the predetermined shape can have differing radiuses of curvature. Bending the printed circuit board into a predetermined shape such as a circular or an elliptical shape will produce an arc portion of the predetermined shape, for the circular shape the entire predetermined shape will have the same radius of curvature and for the elliptical shape portions of the predetermined shape will have differing radiuses of curvature. Alternatively shapes where the radius of curvature is the same but change sign can also be produced, i.e. a predetermined shape may be provided in meandering manner where the radius of curvature is the same for each portion but is alternating between being positive or negative.

According to another embodiment of the invention, the at least one of the plurality of light emitting elements is arranged on the at least first section on the concave side of the bent printed circuit board. Arranging the light emitting elements on a concave side of the printed circuit board will enable the light emitting module to be arranged with a convex side in close proximity to other light emitting modules with a minimal thermal coupling in between.

According to one embodiment of the invention, at least one v-shaped cut-out is formed at an outer edge of the second sections prior to the printed circuit board being bent. According to another embodiment of the invention, at least one v-shaped cut-out is formed at an inner edge of the second sections prior to the printed circuit board being bent. Forming v-

shaped cut-outs at the outer or inner edges of the second section will facilitate the bending of the printed circuit board.

According to another embodiment of the invention, the printed circuit board may comprise a metal-core printed circuit board (MCPCB). The number of light emitting elements used for the light emitting module could be large; hence a MCPCB which is able to convey a large amount of electrical power may preferably be used.

According to one embodiment of the invention, the at least one light emitting element may be distributed so that the light emitting elements form a uniform pattern. According to another embodiment of the invention, the at least one light emitting element may be distributed so that the light emitting elements form a non-uniform pattern. By arranging the light emitting elements to form a uniform pattern, a uniform light distribution from the light emitting module may be achieved. A light emitting module with a uniform light distribution may be suitable to use for example in offices or other workplaces where direct lighting may cause stress or suboptimal conditions for humans in the area. Arranging the light emitting elements to form a non-uniform pattern will produce a light emitting module with a non-uniform light distribution, thereby providing a light emitting module which may be suitable for use in placed where direct lighting is desired such as workbenches and desks.

According to one embodiment of the invention, a light output device (such as for example a luminaire) may comprise at least one light emitting module, a light emitting element-driver, an optical cover, a cable electrically connected between the light emitting element-driver and the at least one light emitting module, and a housing. The advantages of such a light output device are largely analogous to the advantages as described above. Moreover, a light output device with few components and a low cost light emitting module component enables providing a light output device to a total low cost.

According to another aspect of the invention, there is provided a method for manufacturing at least one light emitting module from a printed circuit board panel, the method comprising providing the printed circuit board panel having a predefined area, separating a first elongated printed circuit board from the printed circuit board panel, the first elongated printed circuit board having at least a first section comprising electrical connections and being configured for receiving at least one light emitting element, and at least a second section comprising electrical connections, wherein the first section is wider than the second section, arranging at least one light emitting element on the first section of the first separated printed circuit board, and bending, laterally, a separated first printed circuit

board into a predetermined shape. Advantages and specifications are largely analogous to the previous aspect of the invention.

According to another embodiment of the invention, the method may further comprise separating a second elongated printed circuit board from the printed circuit board panel, the second elongated printed circuit board having a complimentary shape with respect to the first elongated printed circuit board, and is arranged in a shifted manner at the printed circuit board panel such that a first section of the first elongated printed circuit board is arranged to match a second section of the second elongated printed circuit board, thereby reducing unused areas of the printed circuit board panel, arranging at least one light emitting element on at least one first section of the second elongated printed circuit board, and, bending the second separated printed circuit boards laterally into a predetermined shape.

The second elongated printed circuit board, in this embodiment having a complimentary shape compared to the first elongated printed circuit board, will enable the possibility to arrange the first elongated printed circuit board and second elongated circuit board in a shifted manner relative to each other, whereby they as such cover a substantially rectangular area of the printed circuit board panel, thereby minimizing the amount of material wasted from the printed circuit board panel and decreasing the overall cost of producing a light emitting module.

Further features of, and advantages with, the present invention will become apparent when studying the appended claims and the following description. The skilled person realize that different features of the present invention may be combined to create embodiments other than those described in the following, without departing from the scope of the present invention.

BRIEF DESCRIPTION OF THE DRAWINGS

The invention, including its particular features and advantages, will be readily understood from the following detailed description and the accompanying drawings, in which:

Fig. 1 is a perspective view of a printed circuit board panel comprising printed circuit boards according to the present invention;

Fig. 2 is a plane view zoom of the printed circuit board panel in Fig. 1;

Fig. 3 is a flow chart of a method for manufacturing a light emitting module according to the present invention, and

Fig. 4 is perspective views of the components during the steps for manufacturing a light emitting module according to the present invention.

DETAILED DESCRIPTION

The present invention will now be described more fully hereinafter with reference to the accompanying drawings, in which preferred embodiments of the invention are shown. This invention may, however, be embodied in many different forms and should not be construed as limited to the embodiments set forth herein; rather, these embodiments are provided for thoroughness and completeness, and fully convey the scope of the invention to the skilled person. Like reference characters refer to like elements throughout.

Fig. 1 shows a perspective view of a printed circuit board panel 100, the printed circuit board panel 100 being substantially rectangular in shape, where the substantially rectangular shape for example may be an industrial standard. Thus, the length and width of a printed circuit board panel 100 may, for example, be 500 mm and 600 mm, respectively. The printed circuit board panel 100 comprises at least a first printed circuit board 102 and a second printed circuit board 104, where both the first printed circuit board 102 and the second printed circuit board 104 are substantially elongated. The first printed circuit board 102 and the second printed circuit board 104 comprise alternating first and second sections along their length, where the first section is wider compared to the second section. The first wider section comprises electrical connections and is configured to receive at least one light emitting element, whereas the second thinner section (typically) only comprises electrical connections (i.e. being too thin to receive a light emitting element). Preferably, the printed circuit board panel 100 is a metal core printed circuit board (MCPCB).

In Fig. 2, a plane view zoom of the printed circuit board panel 100 is shown, where a first printed circuit board 102 and a second printed circuit board 104 are marked by different shadings. It should be noted that the second printed circuit board 104 is essentially a mirror (shape) of the first printed circuit board 102 and arranged in a shifted manner in such a way that they together cover an essentially rectangular shape of the printed circuit board panel 100. The essentially rectangular shape covered by a first printed circuit board 102 and a second printed circuit board 104 is only broken by the end portions of either a first printed circuit board 102 or a second printed circuit board 104, due to the shifted manner in which they are arranged.

With reference to Fig. 3 and 4 in conjunction, a flowchart of a method for manufacturing at least one light emitting module from a printed circuit board panel 100 comprising a first elongated printed circuit board 102 and a second elongated printed circuit board 104, and a perspective view of the components of each step in the process is shown. In

step S1, a printed circuit board panel 100 is provided, and shapes corresponding to a first printed circuit board 102 and a second printed circuit board 104 are defined on the printed circuit board panel 100 as discussed above. Note that a large number of shapes corresponding to a first printed circuit board 102 and a second printed circuit board 104 may be defined on the printed circuit board panel 100 when defined according to the present invention. Then in step S2, a first elongated printed circuit board 102 and a second elongated printed circuit board 104 are separated from the printed circuit board panel 100. The separation can be performed by an ordinary method or tool for separating pieces of printed circuit board from a larger printed circuit board panel, such as for example by stamping or cutting.

The length of a first printed circuit board 102 and a second printed circuit board 104 is in an embodiment 470mm. The first and second printed circuit boards (102, 104) comprise alternating wider and thinner section as described earlier, where the width of the first wider section for example is 7mm and the width of the second thinner section typically is 3mm.

From step S3 and henceforth, the first printed circuit board 102 and the second printed circuit board 104 will be referred to as the printed circuit board 200, since they are at this point in the process for all intents and purposes interchangeable. In step S3, the printed circuit board 200 will further be formed by a plurality of v-shaped cut-outs on an outer edge 202 and a plurality of v-shaped cut-outs on an inner edge 204 of the second thinner section. The plurality of v-shaped cut-outs on the outer edge 202 and plurality of v-shaped cut-outs on the inner edge 204 will improve the possibility of bending the printed circuit board 200 in the later stages of the process. The number of v-shaped cut-outs shown in Fig. 3 is two, but fewer v-shaped cut-outs or a larger number of v-shaped cut-outs are possible. An example of the depth of the v-shaped cut-outs on the inner edge 202 and the v-shaped cut-outs on the outer edge 204 is 0.5mm.

In step S4, a plurality of light emitting elements 206 are arranged and mounted on the first wider sections of the printed circuit board 200. The wider sections will allow for different types of light emitting elements to be arranged and mounted, furthermore the larger area provided by the wider section will allow heat conduction through the printed circuit board 200 and thereby the possibility to dissipate heat produced, in use, by the light emitting elements 206.

Then in step S5, the printed circuit board 200 (now comprising light emitting elements 206) is bent laterally, that is along the printed circuit boards 200 width, in such a way that the light emitting elements 206 are arranged on an inner concave side of the bent

printed circuit board 206, now represented as light emitting module 208. The light emitting module 208 which is shown is bent into a ring-shape; a ring-shape will provide the possibility of a uniform light distribution from the light emitting module 208 comprising light emitting elements 206. The diameter of the ring shape typically is 130-150mm.

Even though the invention has been described with reference to specific embodiments thereof, many different alterations, modifications and the like will become apparent for those skilled in the art. For example, the PCBs may have fewer or more light emitting elements, or the physical dimension i.e. the size of all parts may be altered. Parts of the system may be omitted, interchanged or arranged in various ways, not affecting the general inventive concept. Further it is possible to bend the printed circuit board into other shapes than a ring, for example triangular or elliptical.

Additionally, variations to the disclosed embodiments can be understood and effected by the skilled person in practicing the claimed invention, from a study of the drawings, the disclosure, and the appended claims. In the claims, the word “comprising” does not exclude other elements or steps, and the indefinite article “a” or “an” does not exclude a plurality. The mere fact that certain measures are recited in mutually different dependent claims does not indicate that a combination of these measures cannot be used to advantage.

CLAIMS

1. A light emitting module (208), comprising:

- a plurality of light emitting elements (206), and

- a printed circuit board (102, 104, 200) being of a substantially elongated shape, the printed circuit board (102, 104, 200) comprising:

- at least a first section comprising electrical connections and being configured for receiving at least one of said plurality of light emitting elements (206), and

- at least a second section comprising electrical connections,

wherein the first section is wider than the second section and the printed circuit board is bent laterally to form a predetermined shape.

2. A light emitting module (208) according to claim 1, wherein the first and the second sections are provided alternating along the length of the elongated printed circuit board (102, 104, 200).

3. A light emitting module (208) according to claim 1 or 2, wherein the predetermined shape comprises an arc portion.

4. A light emitting module (208) according to any one of the preceding claims, wherein said at least one of said plurality of light emitting elements (206) is arranged on said at least first section on the concave side of said bent printed circuit board.

5. The light emitting module (208) according to any one of the preceding claims, wherein at least one v-shaped cut-out (202) is formed at an outer edge of the second sections.

6. The light emitting module (208) according to any one of the preceding claims, wherein at least one v-shaped cut-out (204) is formed at an inner edge of the second sections.

7. The light emitting module (208) according to any one of the preceding claims, wherein the printed circuit board (102, 104, 200) comprises a metal-core printed circuit board (MCPCB).

8. The light emitting module (208) according to any one of the preceding claims, wherein said light emitting elements (206) are distributed so that the light emitting elements form a uniform pattern.

9. The light emitting module (208) according to any one of claims 1 to 7, wherein said light emitting element (206) are arranged to form a non-uniform pattern.

10. Light output device, comprising:

- at least one light emitting module (208) according to any one of the preceding claims;
- a light emitting element-driver;
- an optical cover;
- a cable electrically connected between the light emitting element-driver and the at least one light emitting module, and
- a housing.

11. A method for manufacturing at least one light emitting module (208) from a printed circuit board panel, the method comprising:

- providing (S1) the printed circuit board panel (100) having a predefined area;
- separating (S2) a first elongated printed circuit board (102, 104, 200) from the printed circuit board panel (100), the first elongated printed circuit board (102, 104, 200) having at least a first section comprising electrical connections and being configured for receiving at least one light emitting element (206), and at least a second section comprising electrical connections, wherein the first section is wider than the second section;
- arranging (S4) at least one light emitting element (206) on the first section of said first separated printed circuit board (102, 104, 200), and
- bending (S5) a separated first printed circuit board (102, 104, 200) laterally into a predetermined shape.

12. The method according to claim 11, wherein the first and the second section are provided alternating along the first elongated printed circuit board (102, 104, 200).

13. The method according to any one of claim 11 or 12, further comprising:

- separating (S2) a second elongated printed circuit board (102, 104, 200) from the printed circuit board panel (100), the second elongated printed circuit board (102, 104, 200) having a complimentary shape with respect to the first elongated printed circuit board (102, 104, 200), and is arranged in a shifted manner at the printed circuit board panel (100) such that a first section of the first elongated printed circuit board (102, 104, 200) is arranged to match a second section of the second elongated printed circuit board (102, 104, 200), thereby reducing unused areas of the printed circuit board panel (100),

- arranging (S4) at least one light emitting element (206) on at least one first section of the second elongated printed circuit board (102, 104, 200), and;

- bending (S5) the second separated printed circuit board (102, 104, 200) laterally into a predetermined shape.

14. The method according to claim 11 to 13, wherein the predetermined shape comprises an arc portion.

15. The method according to any one of claims 11 to 13, further comprising:

- forming (S3) a plurality of v-shaped cut-outs (202) at an outer edge of the second sections, and/or;

- forming (S3) a plurality of v-shaped cut-outs (204) at an inner edge of the second sections.

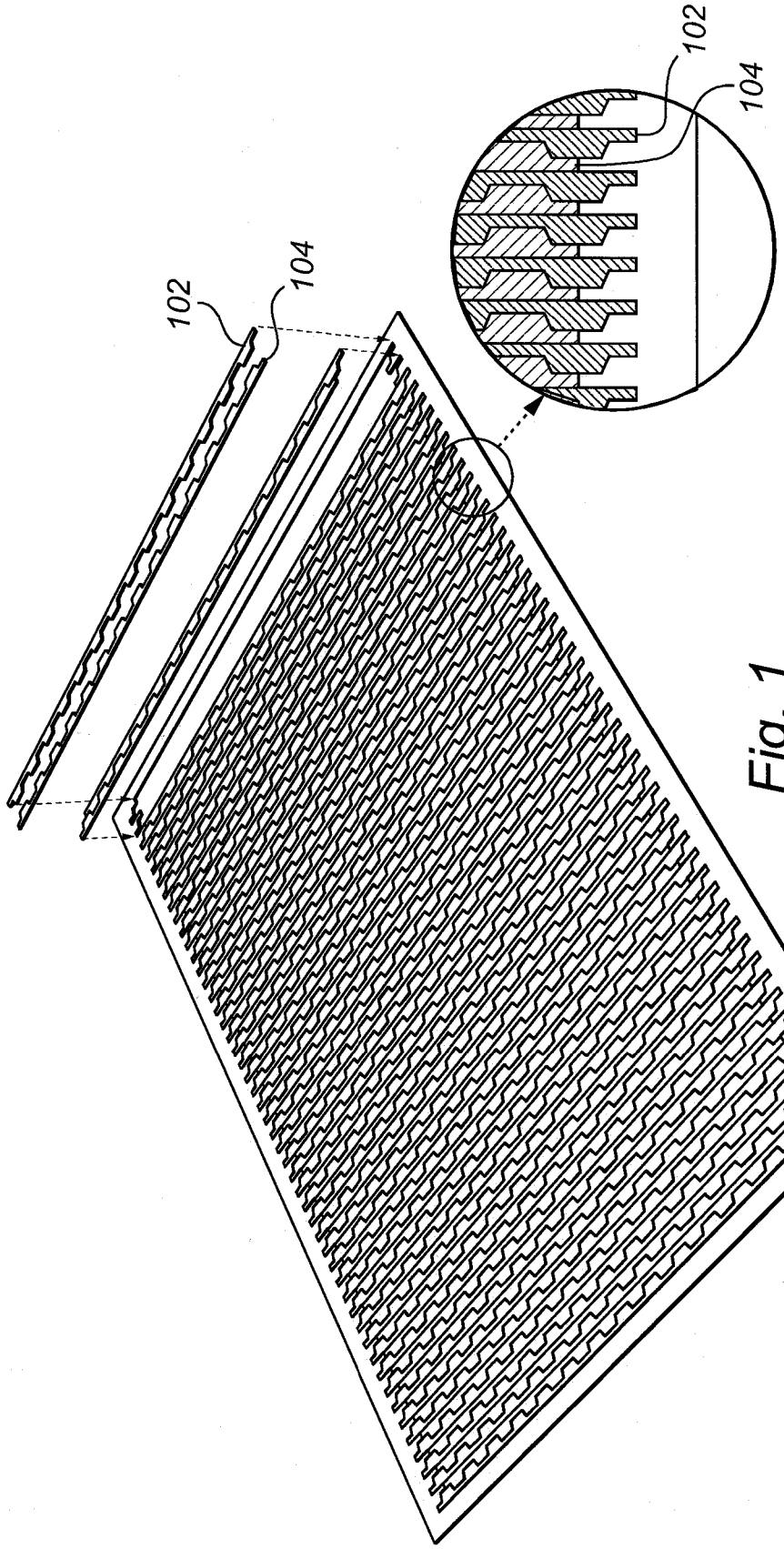

Fig. 1

Fig. 2

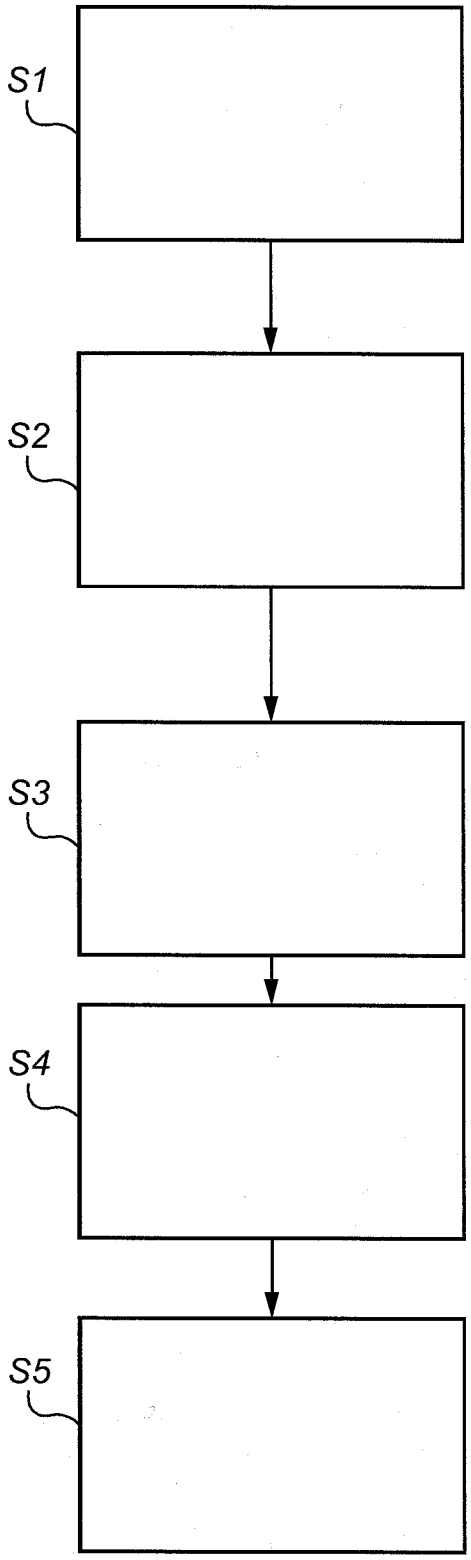

Fig. 3

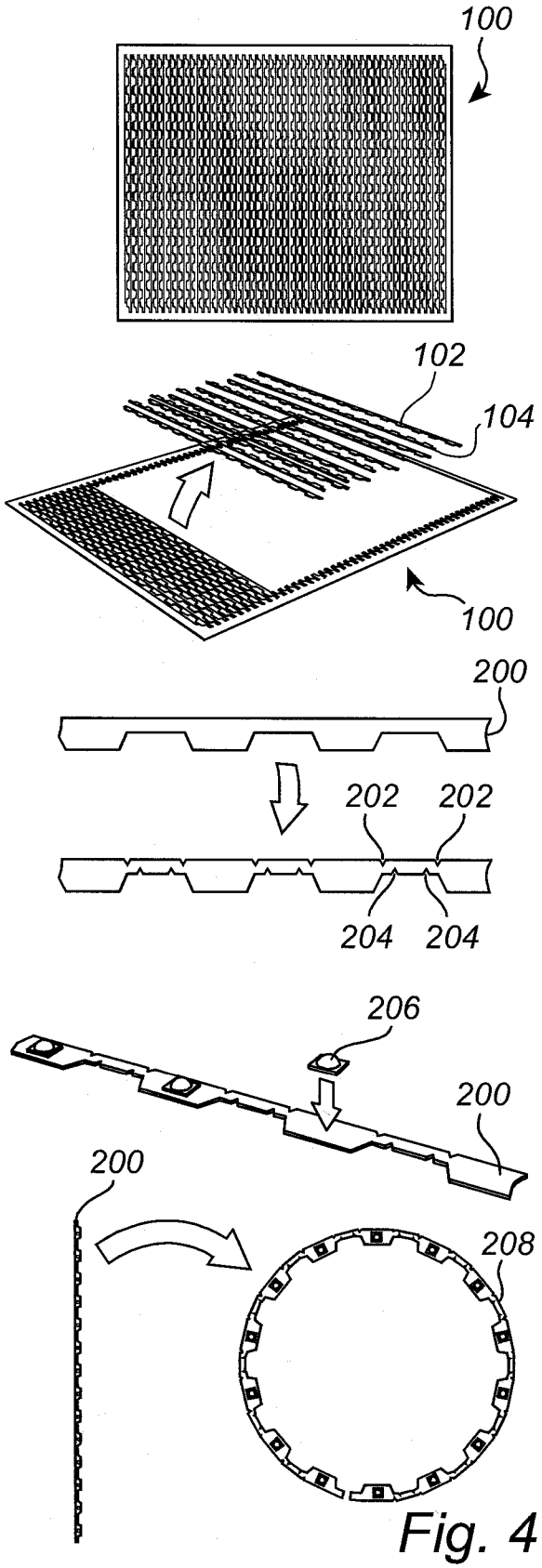

Fig. 4

INTERNATIONAL SEARCH REPORT

International application No
PCT/IB2014/060247

A. CLASSIFICATION OF SUBJECT MATTER
INV. H05K1/02 F21K99/00
ADD.

According to International Patent Classification (IPC) or to both national classification and IPC

B. FIELDS SEARCHED

Minimum documentation searched (classification system followed by classification symbols)
H05K F21K F21Y

Documentation searched other than minimum documentation to the extent that such documents are included in the fields searched

Electronic data base consulted during the international search (name of data base and, where practicable, search terms used)
EPO-Internal, INSPEC, WPI Data, COMPENDEX

C. DOCUMENTS CONSIDERED TO BE RELEVANT

Category*	Citation of document, with indication, where appropriate, of the relevant passages	Relevant to claim No.
X	US 2012/217520 A1 (BAIK SEONG GON [KR]) 30 August 2012 (2012-08-30) abstract; figures 1-4 paragraph [0021] -----	1-15
X	DE 10 2005 050254 A1 (LEBER DIETER [DE]) 26 April 2007 (2007-04-26) abstract; figures 3, 4 page 3/8, column 2, paragraph 16 -----	1-15
X	US 4 439 818 A (SCHEIB JOSEPH J [US]) 27 March 1984 (1984-03-27) abstract; figures 1-3 column 2 ----- -/--	1-15

[X] Further documents are listed in the continuation of Box C.

[X] See patent family annex.

* Special categories of cited documents :

"A" document defining the general state of the art which is not considered to be of particular relevance

"E" earlier application or patent but published on or after the international filing date

"L" document which may throw doubts on priority claim(s) or which is cited to establish the publication date of another citation or other special reason (as specified)

"O" document referring to an oral disclosure, use, exhibition or other means

"P" document published prior to the international filing date but later than the priority date claimed

"T" later document published after the international filing date or priority date and not in conflict with the application but cited to understand the principle or theory underlying the invention

"X" document of particular relevance; the claimed invention cannot be considered novel or cannot be considered to involve an inventive step when the document is taken alone

"Y" document of particular relevance; the claimed invention cannot be considered to involve an inventive step when the document is combined with one or more other such documents, such combination being obvious to a person skilled in the art

"&" document member of the same patent family

Date of the actual completion of the international search	Date of mailing of the international search report
3 July 2014	09/07/2014

Name and mailing address of the ISA/	Authorized officer
European Patent Office, P.B. 5818 Patentlaan 2 NL - 2280 HV Rijswijk Tel. (+31-70) 340-2040, Fax: (+31-70) 340-3016	Faderl, Ingo

INTERNATIONAL SEARCH REPORT

International application No
PCT/IB2014/060247

C(Continuation). DOCUMENTS CONSIDERED TO BE RELEVANT

Category*	Citation of document, with indication, where appropriate, of the relevant passages	Relevant to claim No.
X	WO 2012/176491 A1 (PANASONIC CORP [JP]; URANO YOJI; HATA HITOSHI; HIRATA YUTAKA; ENDO TET) 27 December 2012 (2012-12-27) abstract; figures 4b, 5	1
X	WO 2012/127355 A1 (KONINKL PHILIPS ELECTRONICS NV [NL]; COOIJMANS HUIB [NL]) 27 September 2012 (2012-09-27) abstract; figures 2-4	1
A	JP 2004 103993 A (ICHIKOH INDUSTRIES LTD) 2 April 2004 (2004-04-02) abstract; figures 1, 3	1-15
A	NL 9 000 279 A (ERICSSON TELECOMMUNICATIE BV) 2 September 1991 (1991-09-02) abstract; figures 1-3	1-15
A	US 2012/081630 A1 (YOKOTA MASASHI [JP]) 5 April 2012 (2012-04-05) abstract; figures 9, 10, 13, 17	1-15

INTERNATIONAL SEARCH REPORT

Information on patent family members

International application No
PCT/IB2014/060247

Patent document cited in search report	Publication date	Patent family member(s)	Publication date
US 2012217520 A1	30-08-2012	CN 102484187 A	30-05-2012
		DE 112010004244 T5	31-10-2012
		JP 2012523130 A	27-09-2012
		KR 200448772 Y1	17-05-2010
		US 2012217520 A1	30-08-2012
		WO 2011052885 A2	05-05-2011
DE 102005050254 A1	26-04-2007	NONE	
US 4439818 A	27-03-1984	NONE	
WO 2012176491 A1	27-12-2012	JP 5011445 B1	29-08-2012
		JP 2013008721 A	10-01-2013
		WO 2012176491 A1	27-12-2012
WO 2012127355 A1	27-09-2012	CN 103460813 A	18-12-2013
		EP 2689642 A1	29-01-2014
		JP 2014512093 A	19-05-2014
		US 2014001498 A1	02-01-2014
		WO 2012127355 A1	27-09-2012
JP 2004103993 A	02-04-2004	NONE	
NL 9000279 A	02-09-1991	NONE	
US 2012081630 A1	05-04-2012	CN 102449379 A	09-05-2012
		US 2012081630 A1	05-04-2012
		WO 2010146919 A1	23-12-2010