Oct. 12, 1948. G. M. O'REAR 2,450,910

AERIAL BOMB

Filed Oct. 7, 1938

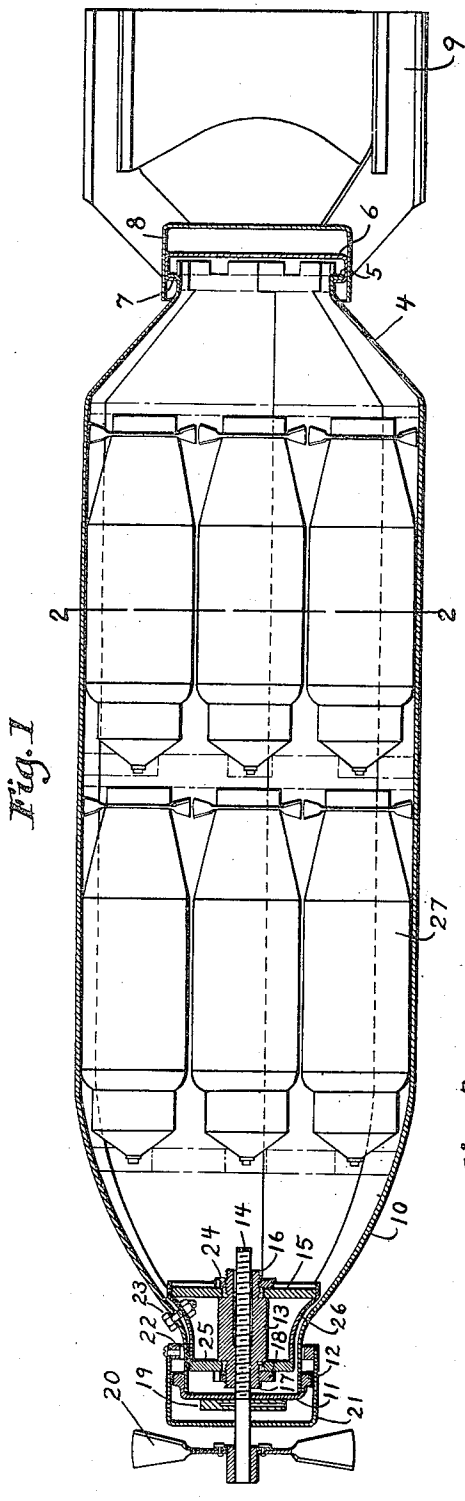

Fig. 1

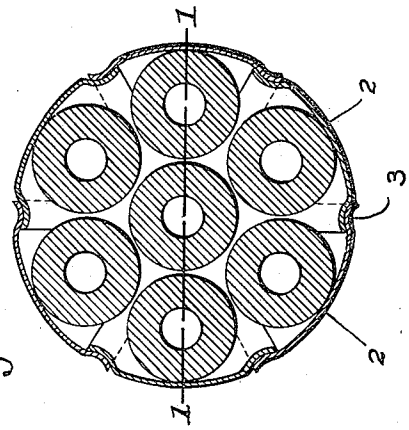

Fig. 2

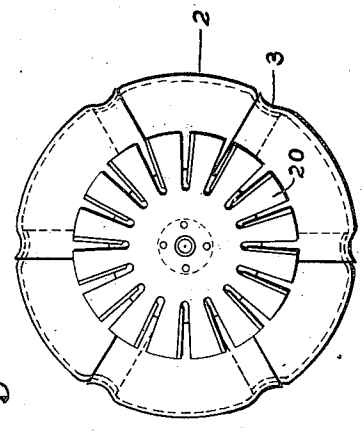

Fig. 3

Inventor:
George M. O'Rear
by Ransom K. Davis
Attorney

Patented Oct. 12, 1948

2,450,910

UNITED STATES PATENT OFFICE

2,450,910

AERIAL BOMB

George M. O'Rear, United States Navy

Application October 7, 1938, Serial No. 233,775

1 Claim. (Cl. 102—7.2)

(Granted under the act of March 3, 1883, as amended April 30, 1928; 370 O. G. 757)

1

This invention relates to a bomb assembly comprising a casing adapted to contain a number of miniature bombs or other missiles and provided with means to cause it to fall apart a predetermined time after launching to effect the release of the contents.

It is one of the objects of this invention to provide a means for the transporting and launching by aircraft of the miniature anti-aircraft bombs when attacking enemy plane formations by either horizontal or dive bombing attacks.

Another object of the invention is to provide adequate weather protection for miniature bombs whose fuses are usually not entirely weathertight.

It is a further object of the invention to afford a means whereby sensitive fuses can be assembled in miniature bombs at the place of manufacture or at an ammunition depot, enclosed in the larger case and shipped to the plane base or carrier. In accomplishing this the sensitive fuses will be subject to minimum handling.

It is a further object of the invention to afford a simple and safe means of loading ammunition on planes by ground or carrier crews where in wartime fully trained men may not be available.

It is a still further object of this invention to provide a means of obtaining a salvo of bombs of considerable pattern size not readily obtainable when bombs are launched individually.

With the foregoing and other objects in view, the invention consists in the construction, combination and arrangement of parts hereinafter described and illustrated in the drawings, in which:

Fig. 1 is a longitudinal, axial, sectional view through a bomb assembly, taken on line 1—1 of Fig. 2;

Fig. 2 is a transverse sectional view taken along line 2—2 of Fig. 1; and

Fig. 3 is an elevational view, showing the exterior of the nose end of the bomb.

The lateral walls of the bomb-case are composed of a number of staves 2 having overlapping portions 3, which portions are dished inwardly in order to prevent lateral movement of the staves. The rear portions of the staves converge inwardly at 4 to form a conical tail. At the extreme rear end of each stave a lip 5 is bent outwardly to form a retaining means for a cup-shaped disk 6 formed with an inwardly directed flange 7 which cooperates with the lips 5 to retain the stave ends in place. Secured to the cup-shaped disk 6 is a cup 8 to which is rigidly secured a guide

2

fin assembly 9. The forward ends of the staves converge inwardly at 10, the extreme forward ends thereof being retained by a cup 11 fitted thereover. The cup 11 is provided with a lip formed with an outwardly directed flange 12.

Carried within the forward end of the casing is a fuse assembly comprising an internally threaded member 13 into which is screwed a threaded shaft 14 carrying a fan 20 secured on its outer end for rotation therewith. The member 13 has reduced threaded ends 16 and 17 over which are freely passed disks 15 and 25. These disks are seated against the shoulders formed at the bases of the reduced portions of member 13 and held thereagainst by nuts or keepers 18 and 24. A flared sleeve 26 is held with its smaller end against disk 25 by the action of disk 15 which seats itself inside the flared end of the sleeve. A bolt 23 secures the sleeve to one of the staves 2. A disk 19 is rigidly secured to shaft 14 adjacent the outer side of cup 11. A deep cup 21 is positioned with its side walls enclosing cup 11. About its lip is secured an inwardly directed flange 22 which when the cup 21 is moved outwardly from the bomb will engage with the outwardly directed flange 12 on cup 11.

The cup 21 is provided with a centrally located hole in its bottom through which shaft 14 freely passes. Inside the bomb casing is arranged a plurality of miniature bombs 27 or other missiles.

When the bomb assembly is ready for launching it is in the condition shown in Fig. 1. The disk 19 prevents any accidental removal of cup 11 which might be caused by a shock to the assembly resulting from dropping or careless handling. Upon launching, the fan 20 is rotated by the action of the air thereon and the disk 19 is gradually moved away from the bottom of cup 11. As the disk 19 continues to move outwardly it engages the bottom of cup 21 and pushes it in the same direction. The flange 22 of cup 21 engages flange 12 of cup 11 and pushes it off the ends of staves 2. As soon as the ends of the staves clear flange 22, the staves are forced apart by the relative movement of the miniature bombs which tend to creep forward in the casing due to lack of air resistance to their falling. The air, gaining entrance to the assembly by this means, quickly spreads apart the staves 2, which drop away from the tail assembly, leaving the miniature bombs to fall as individual missiles.

The time of operation of the main fuse may be varied by screwing the shaft 14 outwardly to a desired extent before firing. So long as the disk

19 does not move outwardly a greater distance than the depth of the side walls of cup 11 the bomb remains in a safe condition for handling.

Other modifications and changes in the proportions and arrangements of the parts may be made by those skilled in the art without departing from the nature of the invention, within the scope of what is hereinafter claimed.

The invention described herein may be manufactured and used by or for the Government of the United States of America for governmental purposes without the payment of any royalties thereon or therefor.

Having thus set forth and disclosed the nature of this invention, what is claimed is:

A bomb assembly adapted to contain a plurality of individual missiles, comprising a plurality of staves which normally form the side walls of a bomb container, means closing one end of said container and releasably holding the staves in their assembled state at that end, and a second means closing the other end of said container and releasably holding the staves in their assembled state at that end, a fuse assembly located at said other end of said container, said assembly comprising an internally threaded member, a shaft threaded therein, a wind operated fan fixed to said shaft, a collar rigidly secured to said shaft and normally preventing removal of said second stave holding means, and means engageable and movable by said collar after a predetermined rotation of said fan, said means when moved a sufficient distance being adapted to remove said second stave holding means whereby said staves are released and said container will fall apart in flight.

GEO. M. O'REAR.

REFERENCES CITED

The following references are of record in the file of this patent:

UNITED STATES PATENTS

Number	Name	Date
37,771	Perley	Feb. 24, 1863
1,111,054	Bonneville	Sept. 22, 1914
1,145,801	Schaeneman	July 6, 1915
1,281,967	Irwin	Oct. 15, 1918
1,313,940	Du Mazuel	Aug. 26, 1919
1,365,865	Svejda	Jan. 18, 1921
1,367,938	Bettica	Feb. 8, 1921
1,529,962	Pantoflicek	Mar. 17, 1925
1,534,126	Lucas	Apr. 21, 1925