May 17, 1927. 1,628,723

R. E. HALL

RELAY

Filed May 31, 1922

Fig. 1

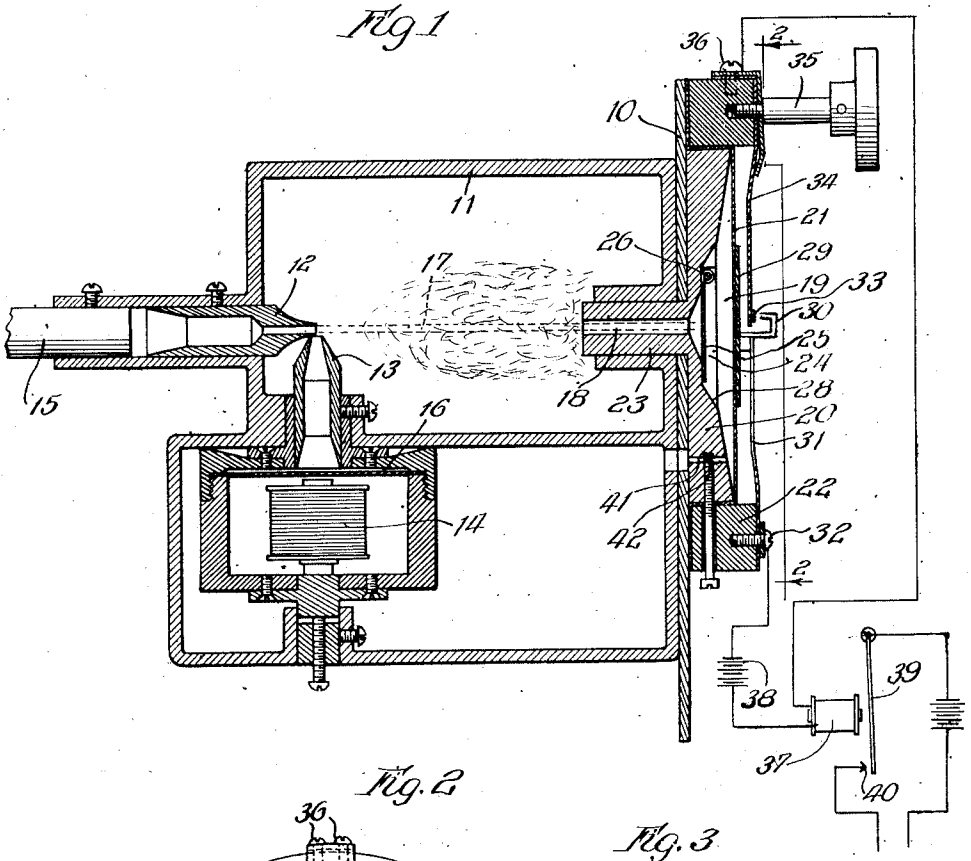

Fig. 2

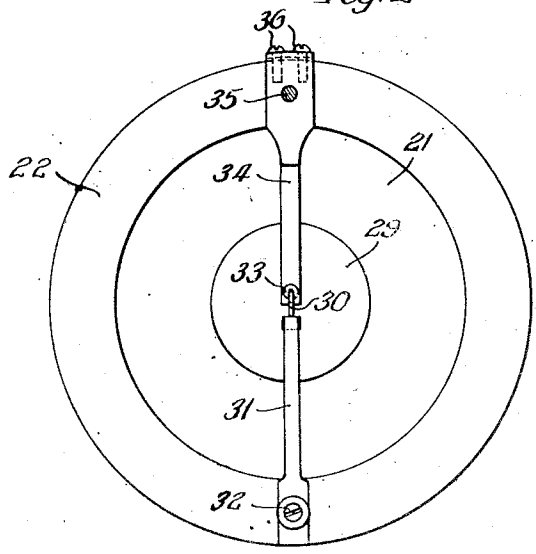

Fig. 3

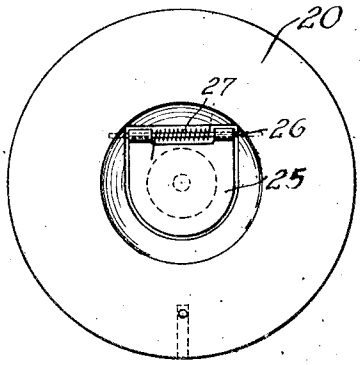

Inventor:
Ray E. Hall
By: Wm. O. Belt Atty.

Patented May 17, 1927. 1,628,723

UNITED STATES PATENT OFFICE.

RAY E. HALL, OF ROCK ISLAND, ILLINOIS, ASSIGNOR TO HALL RESEARCH CORPORATION, OF CHICAGO, ILLINOIS, A CORPORATION OF DELAWARE.

RELAY.

Application filed May 31, 1922. Serial No. 564,981.

The object of this invention is to provide a relay that will require a signal of long duration to close contact, but which will open quickly upon a break in the signal.

A further object of the invention is to provide a jet relay in which the movable medium will respond quickly to the action of the normal jet and will react slowly when the jet assumes an abnormal phase due to the action of sound waves set up by the incoming signal.

A further object of the invention is to produce a call for wireless telephones that will not be affected by telegraph signals or other electrical disturbances of short duration.

Further objects of the invention will become apparent as the description is read in connection with the accompanying drawing illustrating a selected embodiment of the invention and in which

Fig. 1 is a sectional view of a jet relay showing one application of the invention;

Fig. 2 is a section on line 2—2 of Fig. 1; and

Fig. 3 is a plan view of the diaphragm chamber with the diaphragm removed.

The relay is shown supported by a plate 10 which may be secured to any suitable casing, or the like. Mounted on the plate is a frame 11 in which are arranged the nozzle 12, funnel 13 and the telephone 14. The nozzle 12 communicates through the pipe 15 with a suitable source of fluid under proper pressure. The funnel 13 communicates with the diaphragm chamber 16 of the telephone 14. Preferably the nozzle and funnel are adjustably mounted so as to permit them to be accurately arranged in the particular relation required.

The jet 17 issuing from the nozzle 12 passes through a passage 18 into a diaphragm chamber 19 formed in the face of a disk 20 and supported on the plate 10. The diaphragm 21 forming a wall of the chamber is laid over the disk 20 and secured against the plate 10 by a ring 22 which may be made fast by screws or the like. The passage 18 is formed in a tube 23 integral with the disk 20 and at its end communicates with a valve chamber 24 forming a part of the diaphragm chamber 19. A flap valve 25 is pivotally mounted in this chamber on a pintle 26 and a light spring 27 (Fig. 3) tends to keep the valve seated. In order to provide free communication the sides of the valve chamber are sharply inclined as indicated at 28.

The diaphragm carries a disk 29 fixed to a contact 30 carried by the end of a resilient arm 31 fastened to the ring 22 as indicated at 32. Co-operating with the contact 30 is a contact 33 carried by an arm 34 which may be adjusted by a thumb screw 35. The arm 34 is secured to the ring 22 by a screw 36 similar to that illustrated at 32 and these screws may serve as binding posts to connect the contacts 30 and 33 in the circuit of a magnet 37 which includes a battery or the like 38. The magnet 37 when energized will move an armature 39 to close a circuit with the contact 40 to ring a bell or perform any suitable operation.

The nozzle 12 is constructed to deliver a jet of substantially uniform size and direct it through the passage 18 and the valve chamber 24 against the diaphragm 21. The spring 27 being light, the jet easily raises the valve 25 and the fluid pressure developed in the diaphragm chamber 19 will move the diaphragm to the right in Fig. 1, taking the contact 30 away from the contact 33, and then the fluid may pass out of the chamber through a by-pass 41. When a signal operates the diaphragm in the telephone 14 it will set up sound waves that will pass the funnel 13 and act upon the jet at the mouth of the nozzle 12 and cause it to assume varying phases in which a small portion only will enter passage 18. Consequently, the pressure within the diaphragm chamber and the spring 27 will close the valve 25 preventing the ready relief of pressure in the diaphragm chamber and holding the diaphragm distended. By providing the by-pass 41 leading from the diaphragm chamber to the atmosphere and adjusting the area thereof as by a screw 42, the time necessary to permit the diaphragm to react and close the contact 30 with the con-

tact 33 can be adjusted to any suitable period. In applying the invention to a call for wireless telephones, a by-pass that will require approximately 10 seconds to permit the contacts to close will prevent telegraph signals, static discharges and practically all other electrical disturbances likely to be found under present conditions from operating the relay. By varying the by-pass, however, the period necessary for the escape of the trapped fluid within the diaphragm chamber can be regulated to suit particular conditions and the relay can be made to operate for any desired period. Consequently, the relay can be adjusted so that it will not be affected by static discharges or telegraph signals of any intensity, wave length or pitch and will be operated only by a signal of long duration which is predetermined.

If a signal of short duration operates the telephone 14, the jet 17 will be modified for only a corresponding period during which the fluid within the diaphragm chamber will hold the contacts open. Immediately upon the cessation of the signal, the jet will assume its normal phase, open the valve 25 and continue to apply fluid to the diaphragm chamber with usual pressure. Any number of short signals can be received without affecting the relay. When a long signal produces any deformation of the jet, the diaphragm 21 will react sufficiently to close the contact and operate the leaf 39 or other detector.

I am aware that changes may be made in the form, construction and arrangement of the invention, as set forth in the selected embodiment herein, without departing from the scope or sacrificing any of its material advantages, and I therefore reserve the right to make all such changes as fairly fall within the scope of the following claims.

I claim:

1. The combination of means to produce a jet of fluid, means to impress vibrations on said jet to make it assume varying phases, a resilient medium adapted to move in one direction when acted upon by the jet and to react in the opposite direction when the action of the jet is abated, and fluid vent means to adjust the reaction of said resilient medium.

2. The combination of means for producing a jet of fluid, means for impressing waves on said jet, a resilient medium adapted to move in one direction under the action of the jet and to react in the opposite direction when the action of the jet is abated, means to retard the reaction of said resilient medium and means to permit the medium to react slowly.

3. The combination of means to produce a jet of fluid, means for impressing vibrations on said jet, a diaphragm adapted to be acted upon by said jet, a normally closed valve in the path of said jet, and a by-pass permitting escape of the fluid after it has acted on said diaphragm.

4. The combination of means for producing a jet of fluid, means for impressing vibrations on said jet, a diaphragm chamber, a normally closed valve in the path of said jet controlling egress of fluid from said chamber, a diaphragm forming a wall of said chamber and a by-pass connecting said chamber with the atmosphere.

5. The combination of means for producing a jet of fluid, means for impressing waves on said jet, a diaphragm in the path of said jet, a chamber over which said diaphragm extends and into which said jet is directed, a check valve controlling the escape of fluid from said chamber, and a by-pass communicating with said chamber.

6. The combination of a diaphragm, a chamber having one wall thereof formed by said diaphragm, a contact movable with said diaphragm, a relatively fixed contact, means for directing a jet of fluid into said chamber to move said diaphragm in one direction, a valve controlling egress from said chamber, and a by-pass communicating with said chamber.

7. The combination of a diaphragm, separable contacts operated by said diaphragm, a fluid chamber having a wall formed by said diaphragm, a passage communicating with said chamber, a normally closed valve controlling said passage, means for directing a jet of fluid through said passage into said chamber, means for impressing waves on said jet, and means for permitting the escape of fluid from said chamber.

8. The combination including separable contacts, a resilient medium adapted to open and close said contacts, means to bias said medium in a direction to separate said contacts, means to abate the action of the last named means, and fluid vent means to retard the reaction of said medium.

9. The combination including separable contacts, a diaphragm for controlling said contacts, means for producing a fluid jet to bias said diaphragm, means for abating the force of said jet, means for automatically checking the reaction of said diaphragm, and means to slowly relieve said diaphragm.

10. The combination of relatively movable contacts, a resilient medium for operating said contacts, means to bias said medium in one direction to open said contacts, means to abate the action of the last named means, and independent means to retard the reaction of said medium to prevent closing the contacts for a relatively long period.

11. The combination of relatively movable contacts, a resilient medium adapted to control said contacts, means to bias said

medium to open said contacts, means to abate the action of the last named means, means to block the reaction of said resilient medium, and independent means to relieve the medium slowly.

12. The combination of relatively movable contacts, a diaphragm for opening and closing said contacts, means for directing a jet into a chamber adjacent to said diaphragm, a check valve controlling the entrance to said chamber, means for abating the action of said jet, and means to slowly relieve the pressure in said chamber.

RAY E. HALL.