US010585127B2

(12) **United States Patent**
Gabrielsson et al.

(10) **Patent No.: US 10,585,127 B2**
(45) **Date of Patent: *Mar. 10, 2020**

(54) **RESIDUAL CURRENT DETECTING (RCD) AND GROUND IMPEDANCE MONITORING TRANSFORMER AND CONTROL METHODS**

(71) Applicant: **AeroVironment, Inc.**, Monrovia, CA (US)

(72) Inventors: **Peter Gabrielsson**, Sierra Madre, CA (US); **Albert Joseph Flack**, Garden Grove, CA (US); **Scott Berman**, Los Angeles, CA (US)

(73) Assignee: **WEBASTO CHARGING SYSTEMS, INC.**, Simi Valley, CA (US)

(*) Notice: Subject to any disclaimer, the term of this patent is extended or adjusted under 35 U.S.C. 154(b) by 0 days.

This patent is subject to a terminal disclaimer.

(21) Appl. No.: **15/947,322**

(22) Filed: **Apr. 6, 2018**

(65) **Prior Publication Data**

US 2018/0224488 A1 Aug. 9, 2018

Related U.S. Application Data

(63) Continuation of application No. 15/614,059, filed on Jun. 5, 2017, now Pat. No. 9,964,574.
(Continued)

(51) **Int. Cl.**
H02H 7/04 (2006.01)
G01R 27/18 (2006.01)
(Continued)

(52) **U.S. Cl.**
CPC ***G01R 27/18*** (2013.01); ***B60L 3/0069*** (2013.01); ***B60L 53/60*** (2019.02); ***G01R 15/185*** (2013.01);
(Continued)

(58) **Field of Classification Search**
USPC 361/35, 36, 38
See application file for complete search history.

(56) **References Cited**

U.S. PATENT DOCUMENTS

4,274,051 A 6/1981 Condon
4,278,940 A 7/1981 Milkovic
(Continued)

FOREIGN PATENT DOCUMENTS

DE 3940932 A1 6/1991
EP 0137347 A1 4/1985
(Continued)

OTHER PUBLICATIONS

International Search Report for Serial No. PCT/US17/35951 dated Aug. 29, 2017.
(Continued)

Primary Examiner — Danny Nguyen
(74) *Attorney, Agent, or Firm* — Brooks Acordia IP Law, PC; Michael Zarrabian

(57) **ABSTRACT**

Systems, devices, and methods for a transformer including: a first drive winding (206) wound on a first core; a second drive winding wound on a second core; a sense winding wound across the first and second cores; and a compensation winding wound across the first and second cores; where one or more utility lines are threaded through a middle of the first and second cores, a common mode current in the one or more utility lines causes one or more pulses to appear on the sense winding, a current on the compensation winding is adjusted until the one or more pulses on the sense winding are cancelled out, and the common mode current on the one or more utility lines is the adjusted current on the compensation winding multiplied by a turn ratio between the compensation winding and the sense winding.

20 Claims, 18 Drawing Sheets

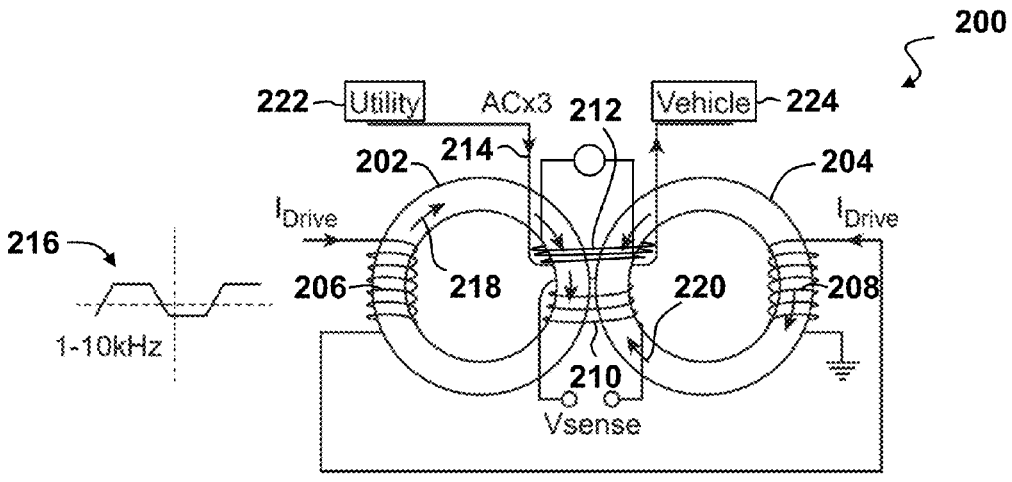

Related U.S. Application Data

(60) Provisional application No. 62/346,287, filed on Jun. 6, 2016.

(51) **Int. Cl.**

H02H 3/33	(2006.01)
G01R 15/18	(2006.01)
B60L 53/60	(2019.01)
B60L 3/00	(2019.01)
G01R 31/00	(2006.01)
H02H 3/04	(2006.01)
H02H 7/045	(2006.01)

(52) **U.S. Cl.**

CPC ***G01R 31/006*** (2013.01); ***H02H 3/044*** (2013.01); ***H02H 3/338*** (2013.01); *H02H 7/04* (2013.01); *H02H 7/045* (2013.01)

(56) **References Cited**

U.S. PATENT DOCUMENTS

4,616,174	A	10/1986	Jorgensen
4,742,294	A	5/1988	Gallios
5,327,065	A	7/1994	Bruni et al.
8,896,315	B1	11/2014	Davies
9,964,574	B2 *	5/2018	Gabrielsson H02H 3/338

FOREIGN PATENT DOCUMENTS

EP	2749891	A1	7/2014
EP	2924450	A1	9/2015
FR	2987515	A1	8/2013
WO	2006048020	A1	5/2006
WO	2012160233	A2	11/2012

OTHER PUBLICATIONS

European Search Report for EP 17810786, dated Jan. 7, 2020.

Zhigang Zhao et al: "The optimization of dual-core closed-loop fluxgate technology in precision current sensor", Journal of Applied Physics, Mar. 7, 2012.

* cited by examiner

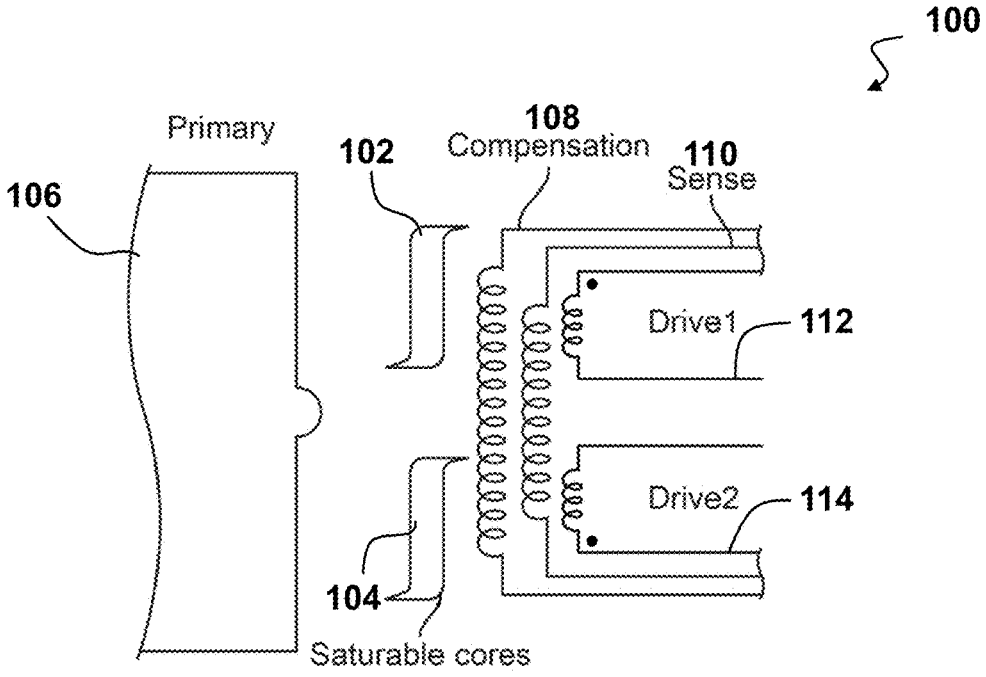

FIG. 1

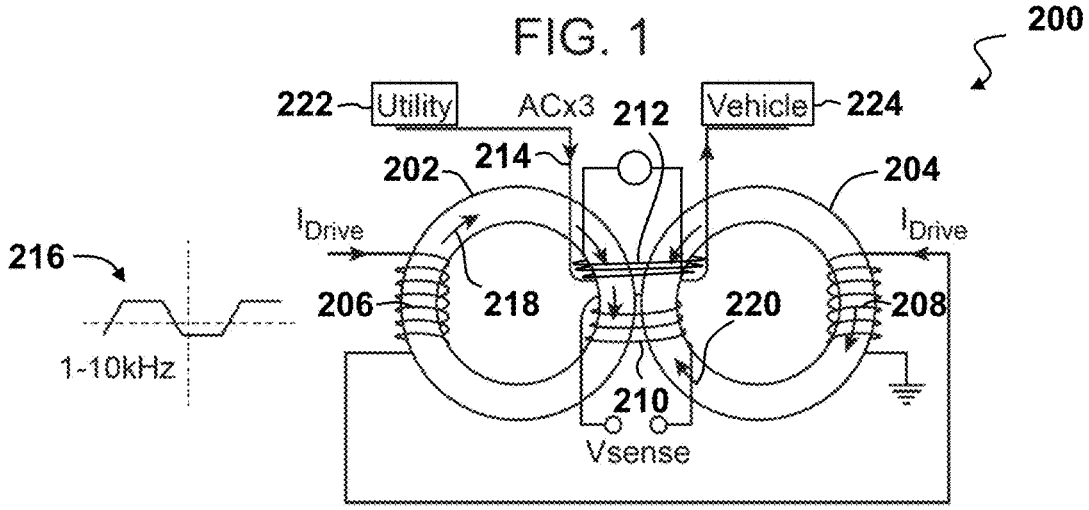

FIG. 2

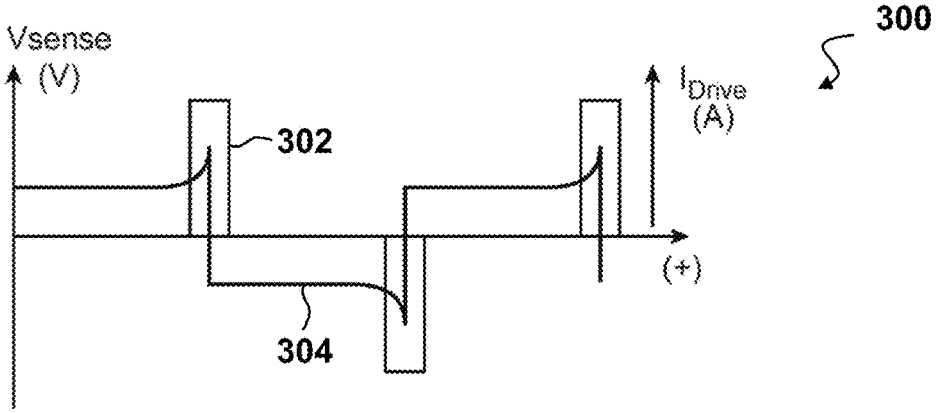

FIG. 3

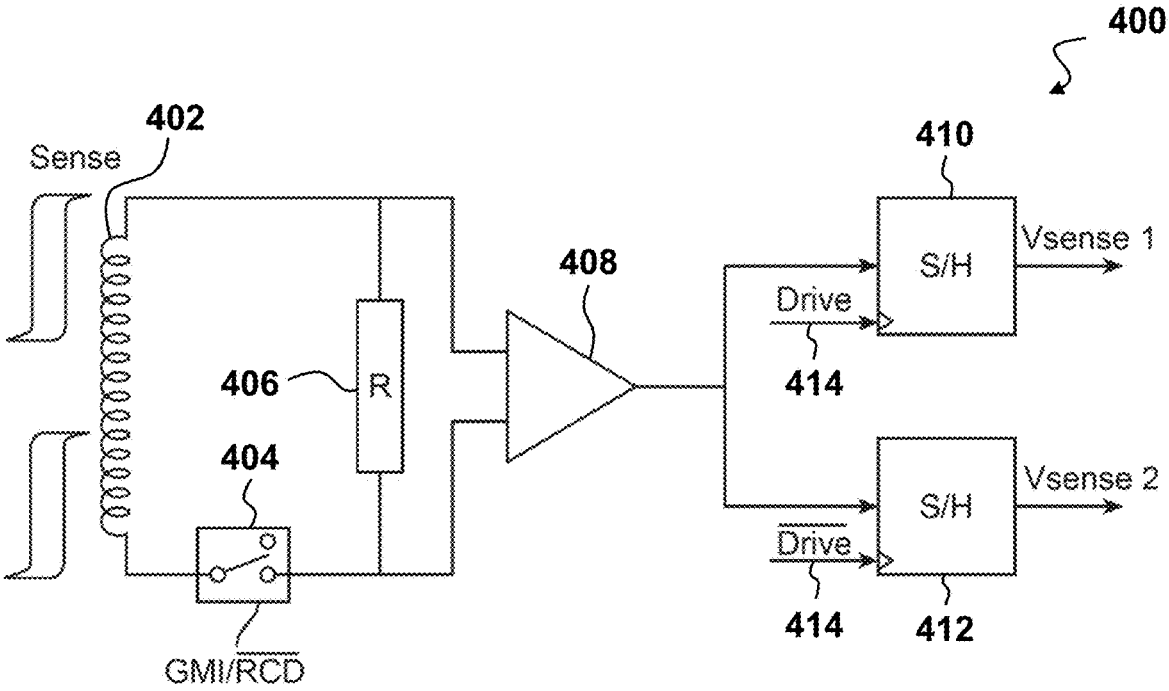
400
402
Sense
410
Vsense 1
S/H
408
Drive
414
406
R
404
Vsense 2
S/H
Drive
414
412
GMI/RCD

FIG. 4

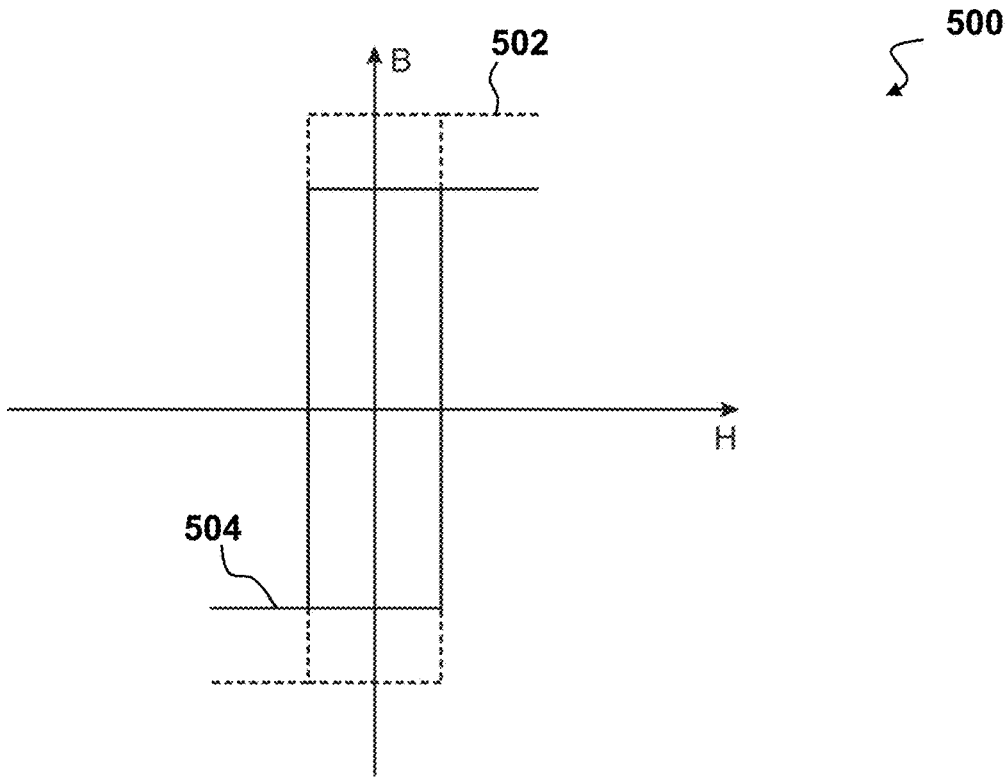
500
502
B
H
504

FIG. 5

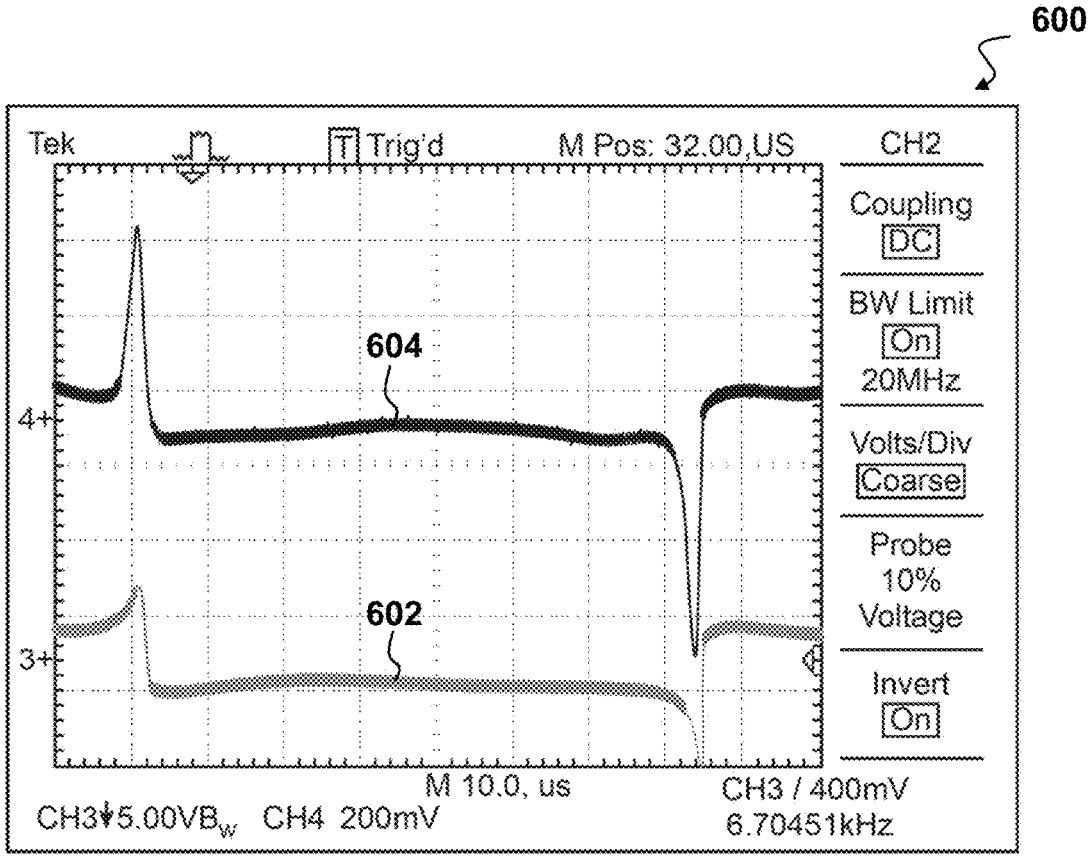
600
Tek
Trig'd
M Pos: 32.00,US
CH2
Coupling
DC
BW Limit
On
20MHz
Volts/Div
Coarse
Probe
10%
Voltage
Invert
On
604
602
4+
3+
M 10.0, us
CH3 / 400mV
CH3 5.00VBW CH4 200mV
6.70451kHz

FIG. 6

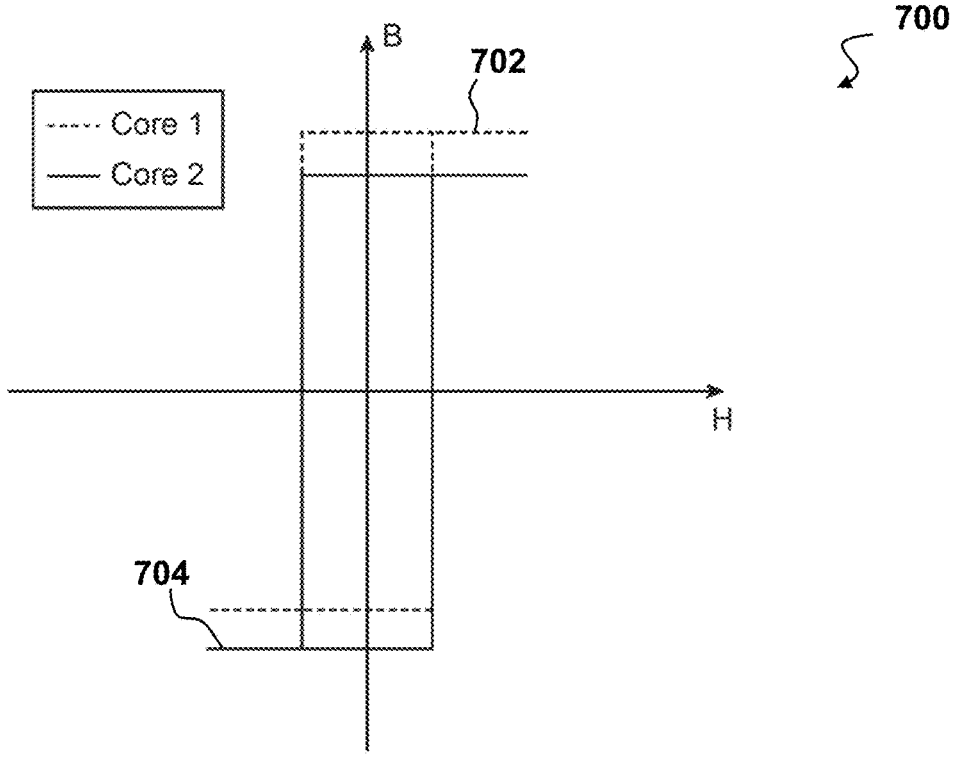
700
B
H
Core 1
Core 2
702
704

FIG. 7

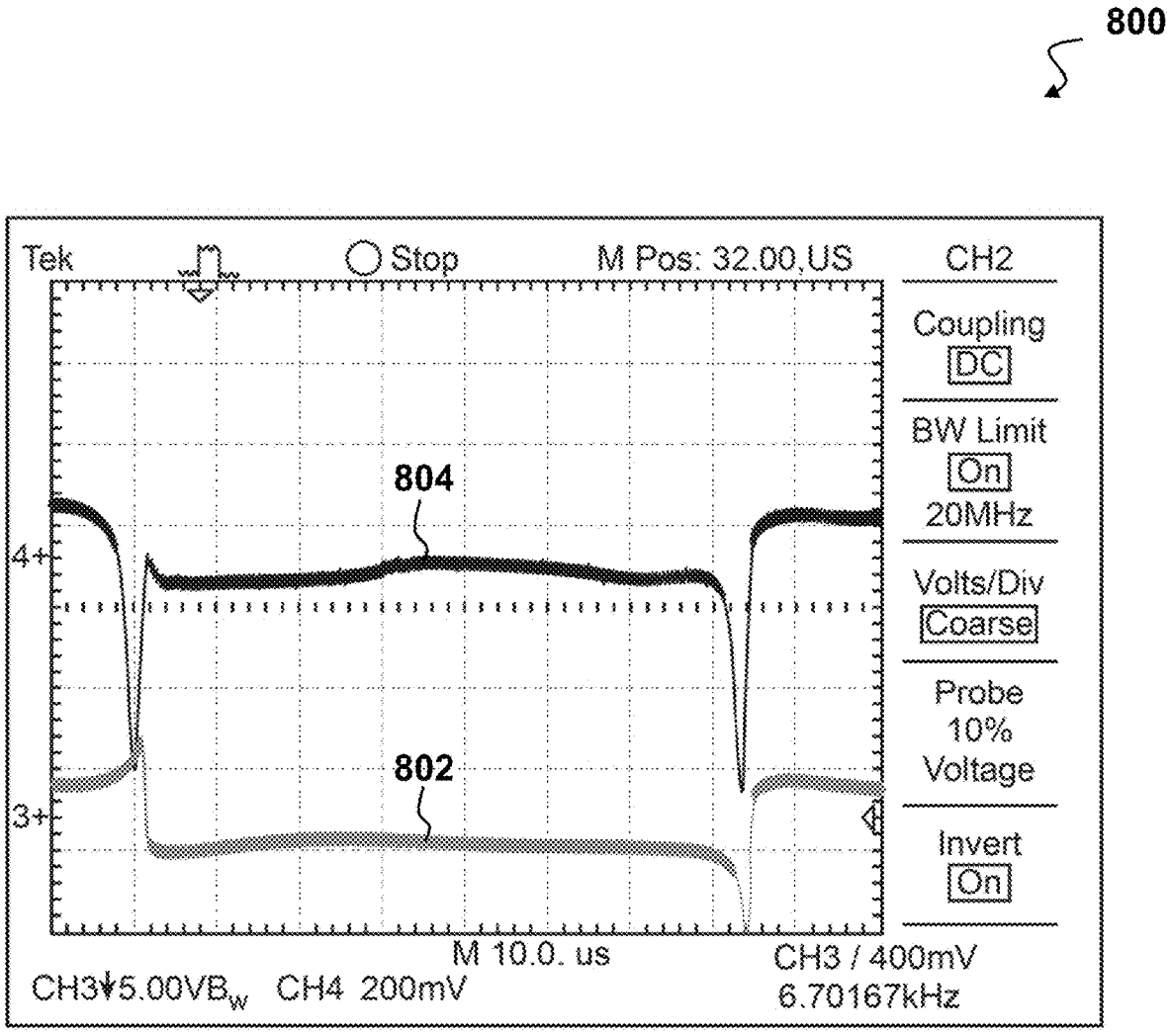
800
Tek
Stop
M Pos: 32.00,US
CH2
Coupling
DC
BW Limit
On
20MHz
Volts/Div
Coarse
Probe
10%
Voltage
Invert
On
804
802
4+
3+
M 10.0. us
CH3 / 400mV
CH3 5.00VBW CH4 200mV
6.70167kHz

FIG. 8

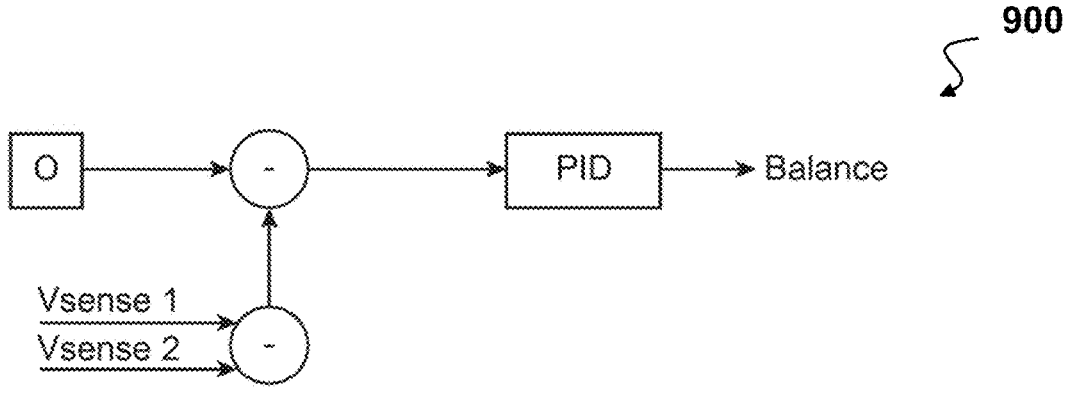
900
O
-
PID
Balance
Vsense 1
Vsense 2
-

FIG. 9

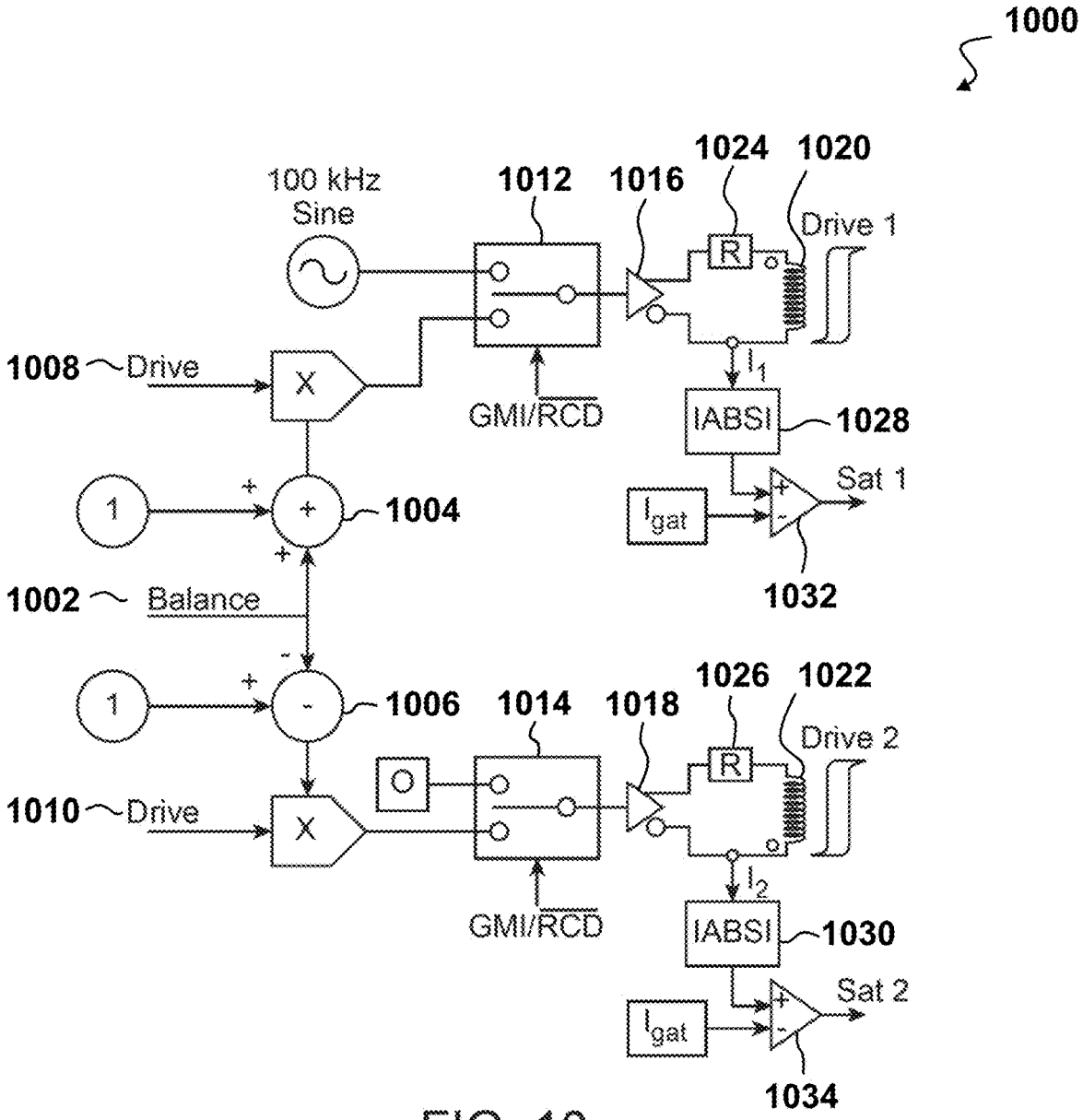
1000
100 kHz
Sine
1012
1016
1024
1020
Drive 1
R
1008
Drive
X
GMI/RCD
I1
IABSI
1028
Sat 1
1
+
1004
Igat
1032
1002
Balance
1026
1022
Drive 2
1006
1014
1018
O
1010
Drive
GMI/RCD
I2
IABSI
1030
Sat 2
Igat
1034

FIG. 10

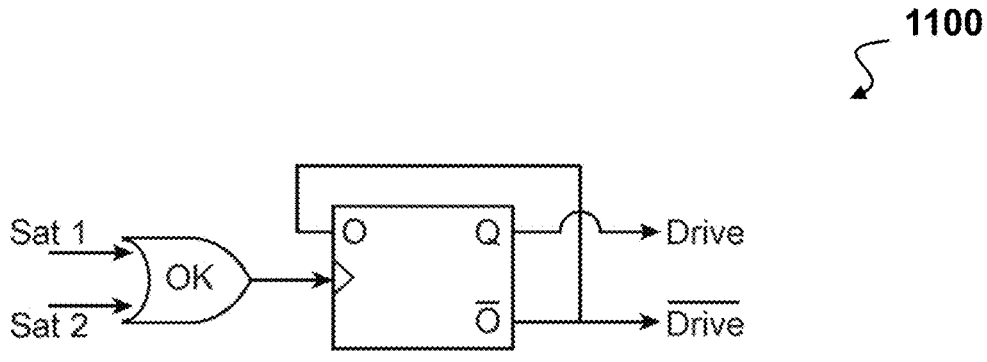
1100
Sat 1
Sat 2
OK
O
Q
Drive
Drive

FIG. 11

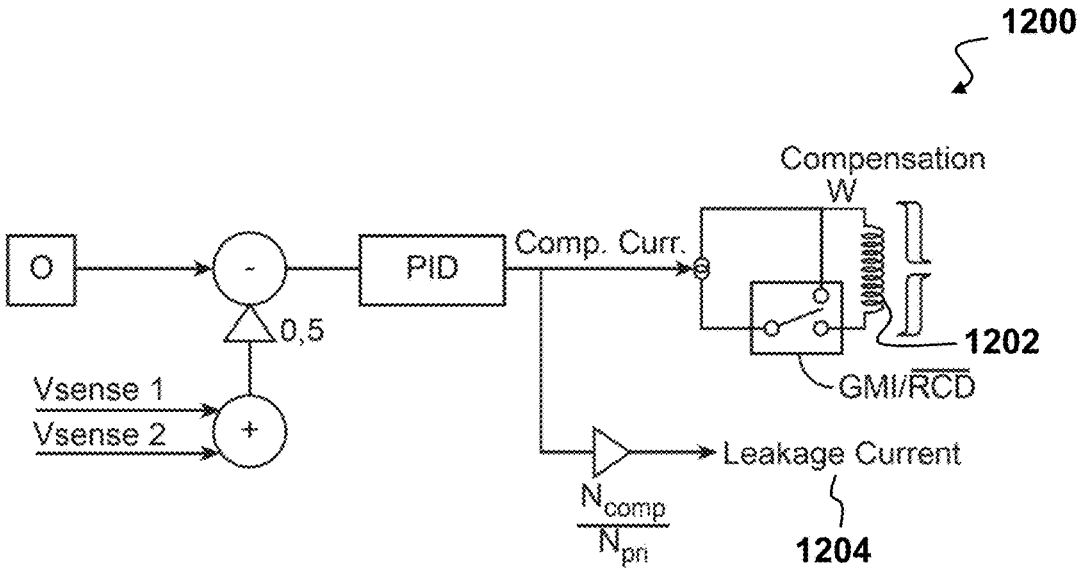

FIG. 12

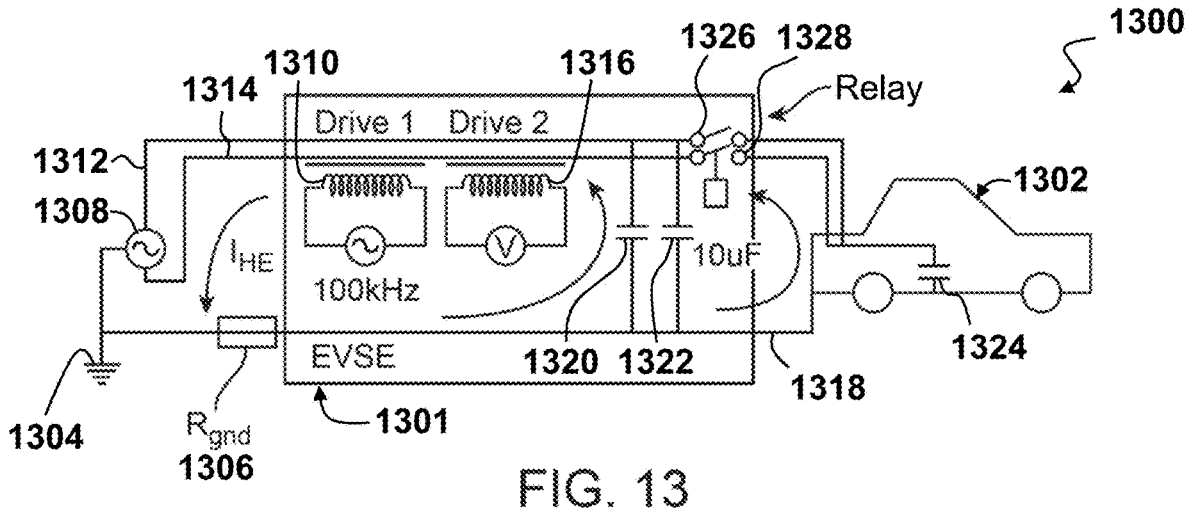

FIG. 13

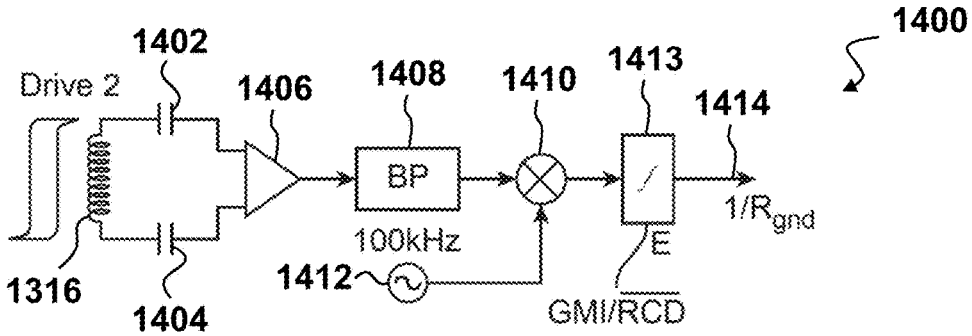

FIG. 14

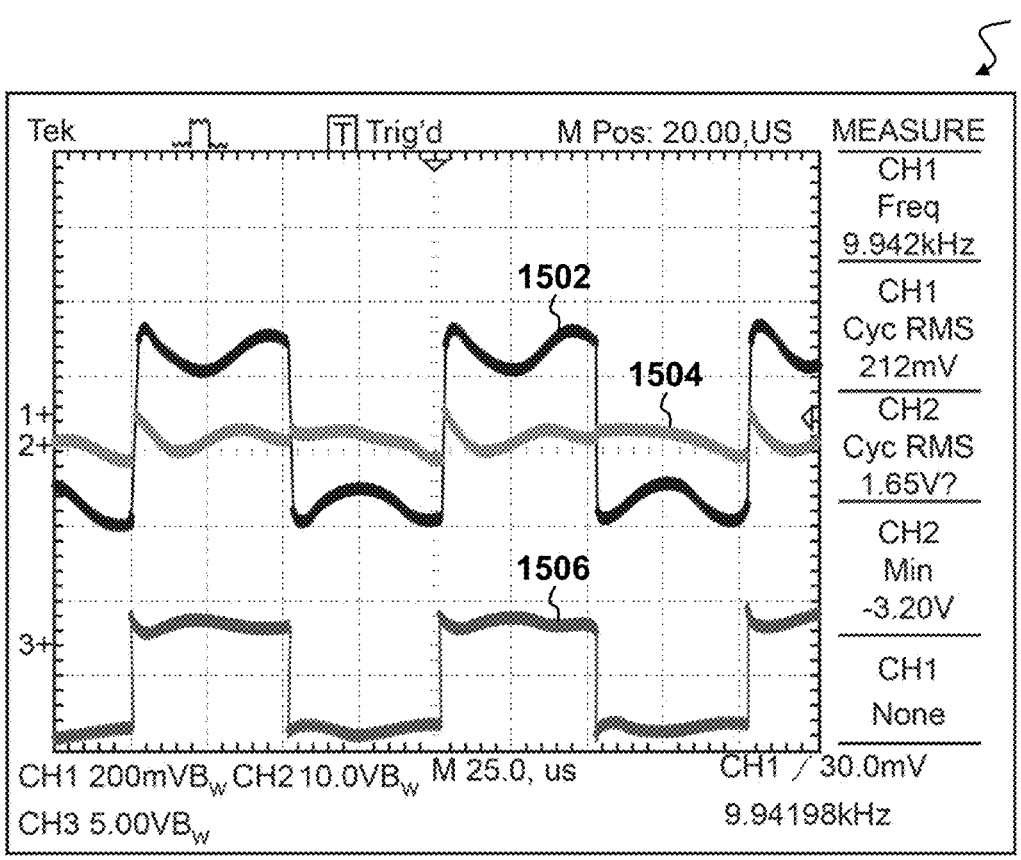
1500
Tek
Trig'd
M Pos: 20.00,US
MEASURE
CH1
Freq
9.942kHz
CH1
Cyc RMS
212mV
CH2
Cyc RMS
1.65V?
CH2
Min
-3.20V
CH1
None
1502
1504
1506
1+
2+
3+
CH1 200mVBw CH2 10.0VBw M 25.0, us
CH1 ∕ 30.0mV
CH3 5.00VBw
9.94198kHz

FIG. 15

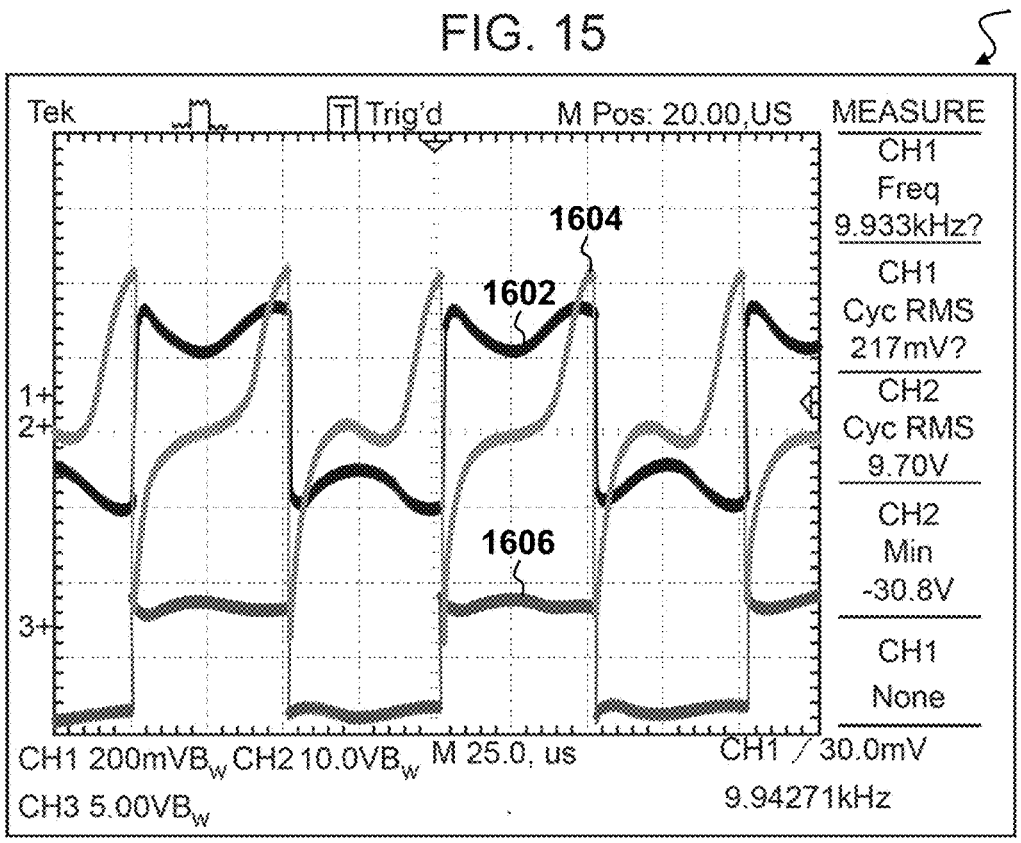
1600
Tek
Trig'd
M Pos: 20.00,US
MEASURE
CH1
Freq
9.933kHz?
CH1
Cyc RMS
217mV?
CH2
Cyc RMS
9.70V
CH2
Min
-30.8V
CH1
None
1604
1602
1606
1+
2+
3+
CH1 200mVBw CH2 10.0VBw M 25.0, us
CH1 ∕ 30.0mV
CH3 5.00VBw
9.94271kHz

FIG. 16

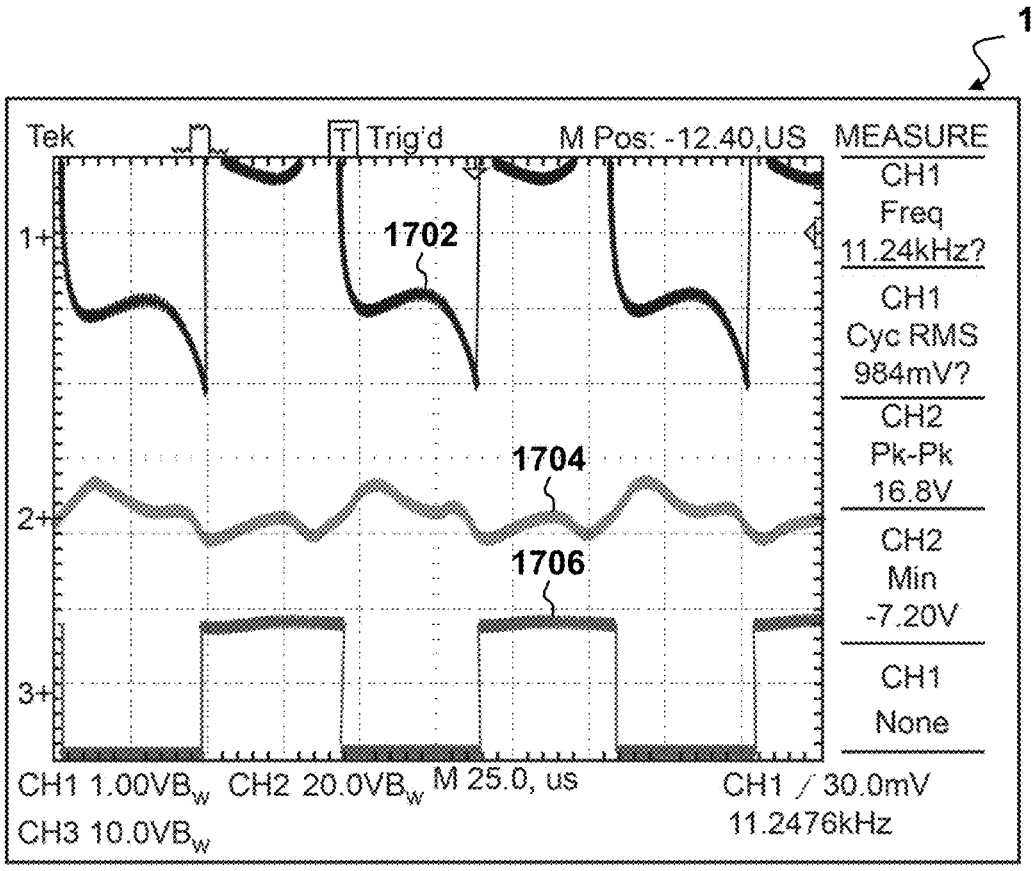
1700
Tek
Trig'd
M Pos: -12.40,US
MEASURE
CH1
Freq
11.24kHz?
CH1
Cyc RMS
984mV?
CH2
Pk-Pk
16.8V
CH2
Min
-7.20V
CH1
None
1702
1704
1706
1+
2+
3+
CH1 1.00VBW CH2 20.0VBW M 25.0, us
CH3 10.0VBW
CH1 / 30.0mV
11.2476kHz

FIG. 17

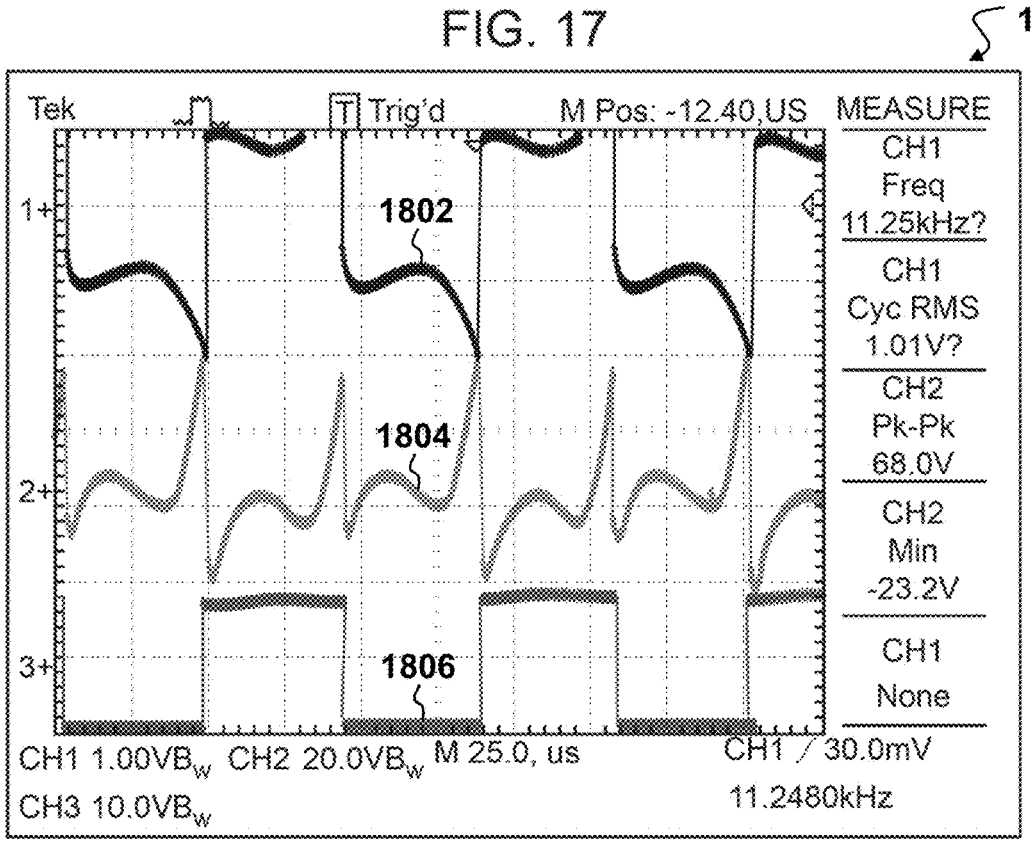
1800
Tek
Trig'd
M Pos: -12.40,US
MEASURE
CH1
Freq
11.25kHz?
CH1
Cyc RMS
1.01V?
CH2
Pk-Pk
68.0V
CH2
Min
-23.2V
CH1
None
1802
1804
1806
1+
2+
3+
CH1 1.00VBW CH2 20.0VBW M 25.0, us
CH3 10.0VBW
CH1 / 30.0mV
11.2480kHz

FIG. 18

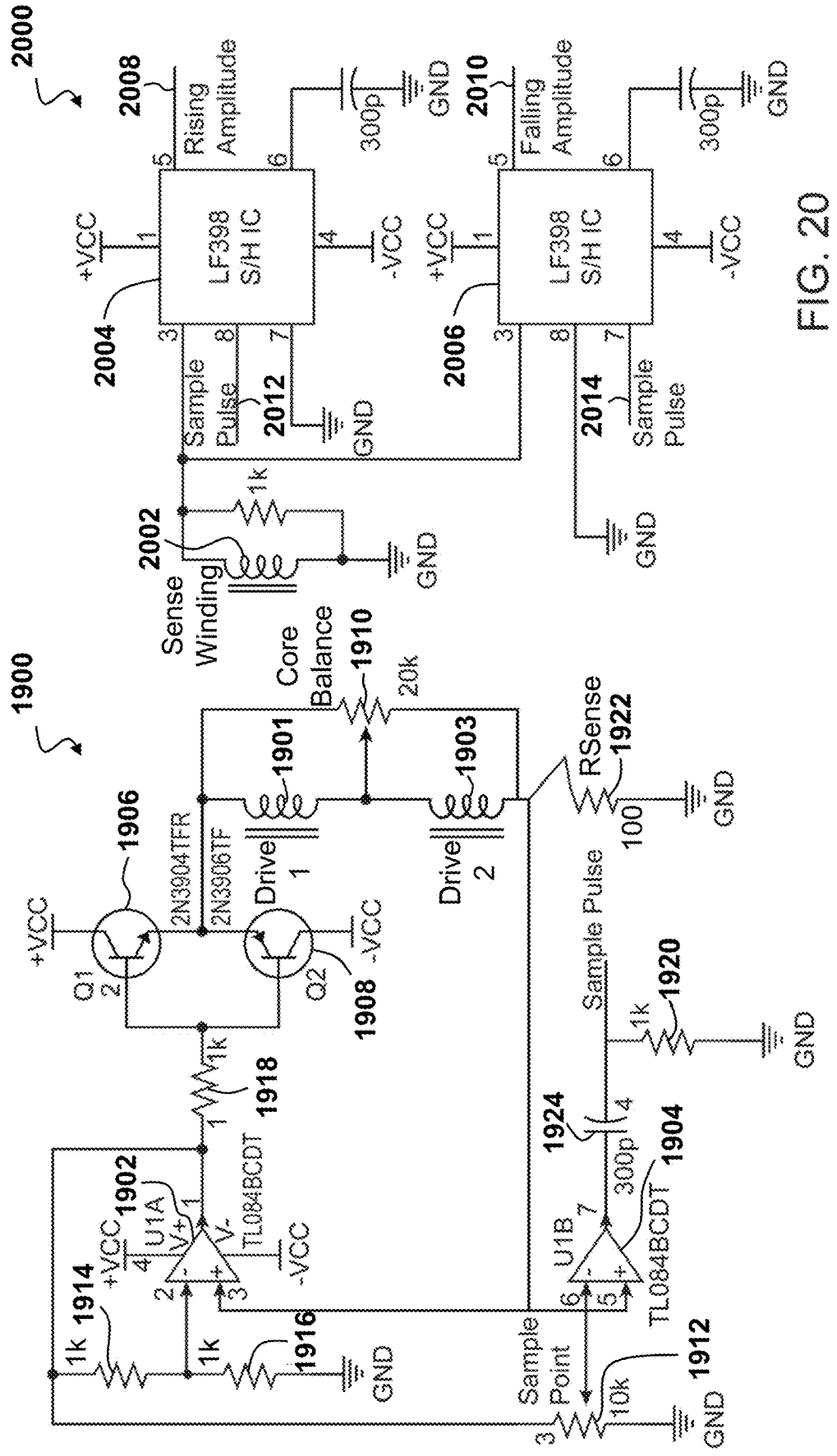
2000
2008
Rising Amplitude
2010
Falling Amplitude
LF398 S/H IC
+VCC
-VCC
GND
300p
2004
2006
Sample Pulse
2012
2014
2002
Sense Winding
1k
1900
Core Balance
1910
20k
1901
1903
Drive 1
Drive 2
2N3904TFR
2N3906TF
1906
1908
Q1
Q2
RSense
1922
100
Sample Pulse
1920
1918
1902
U1A
U1B
TL084BCDT
1924
1904
1914
1916
Sample Point
1912
10k

FIG. 20

FIG. 19

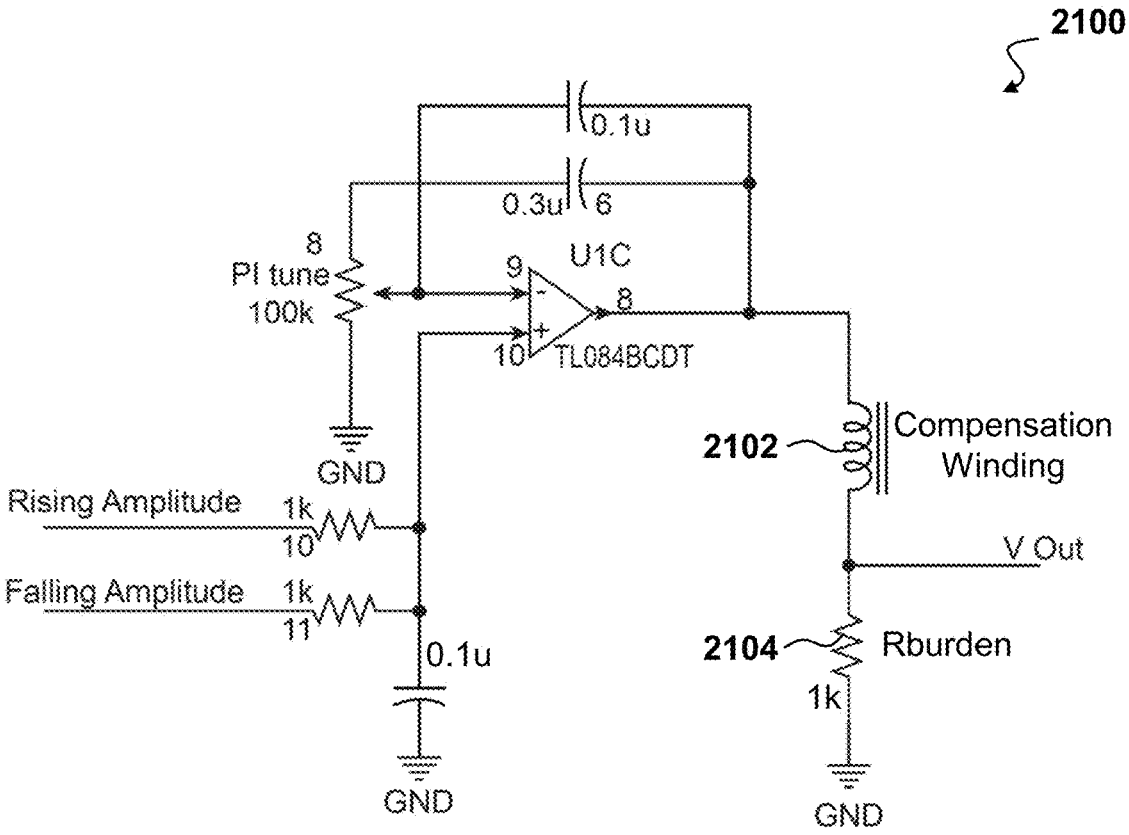

FIG. 21

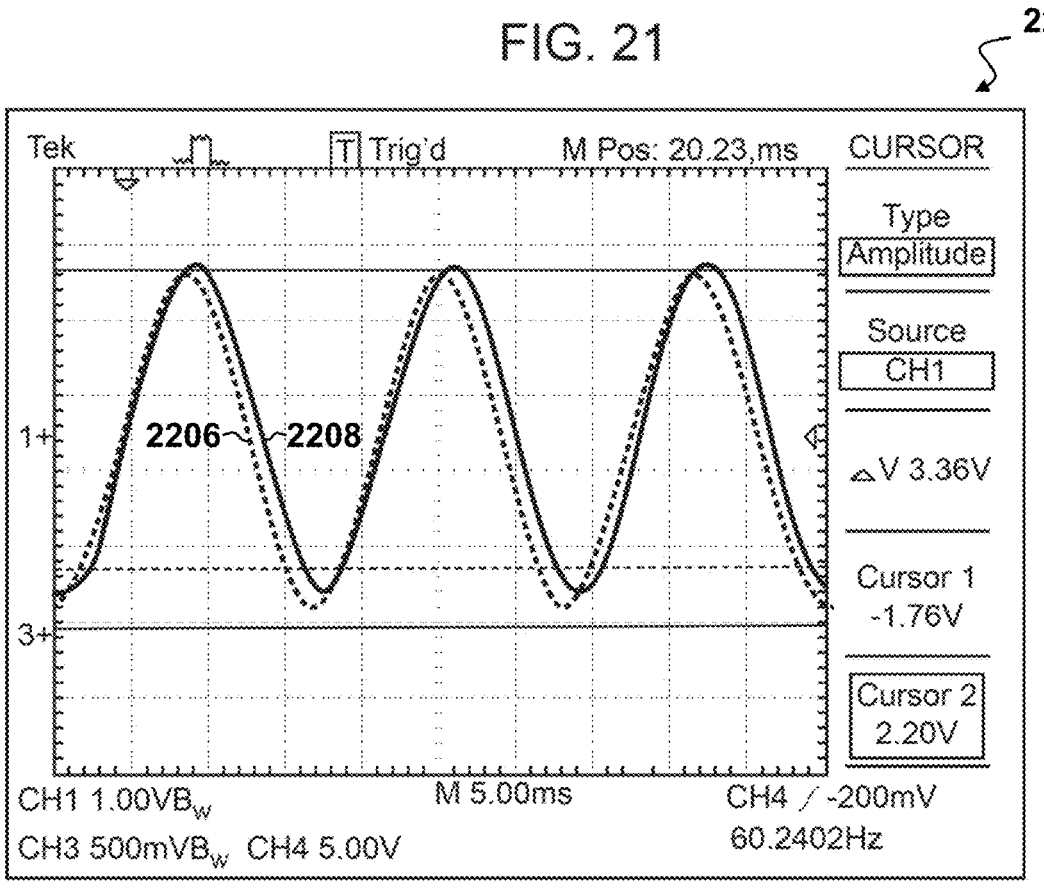

FIG. 22A

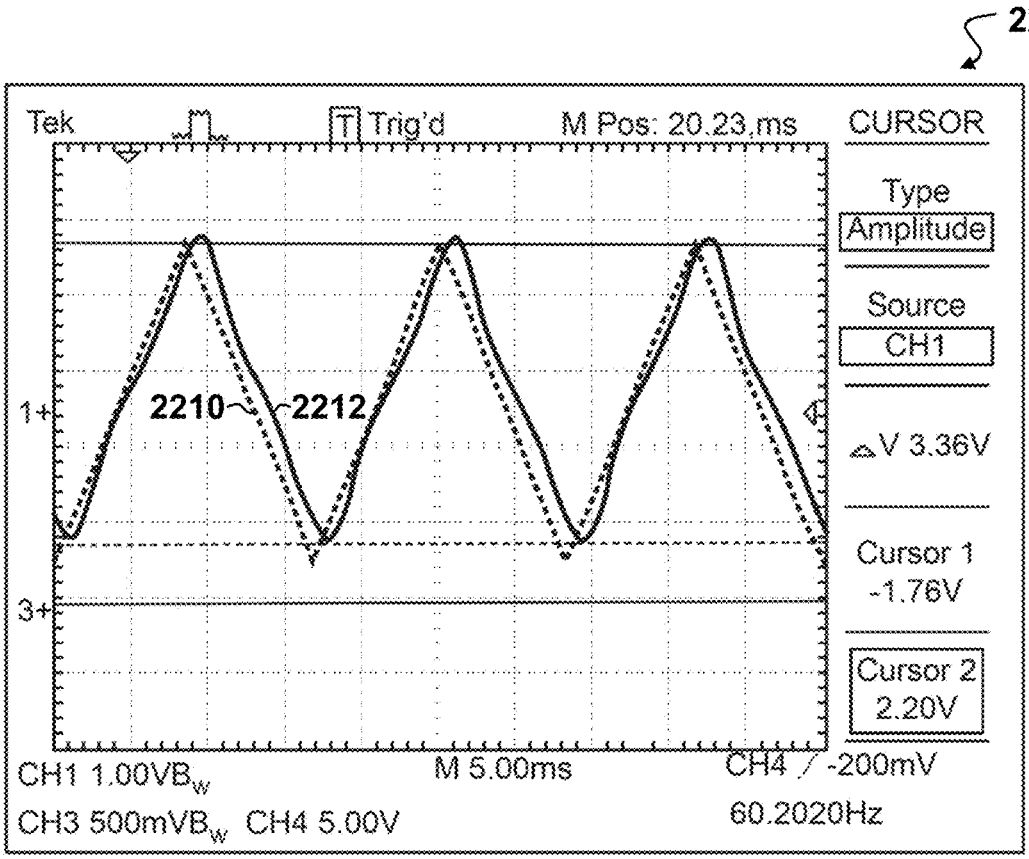

FIG. 22B

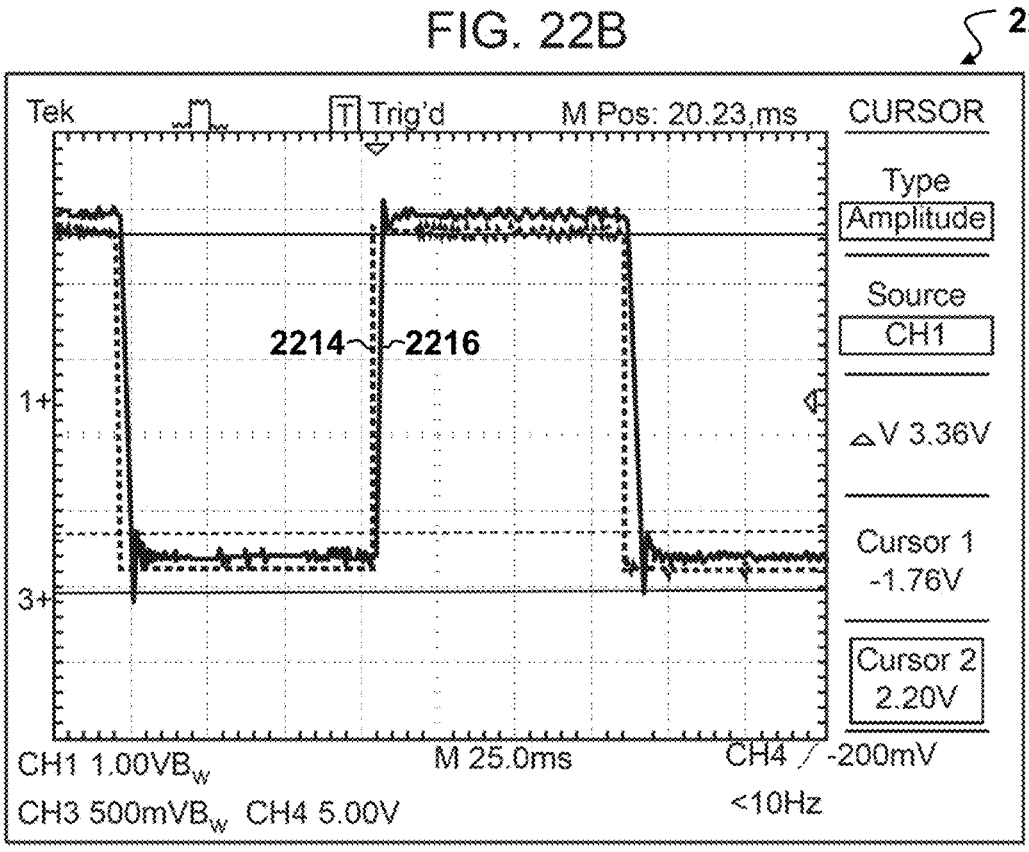

FIG. 22C

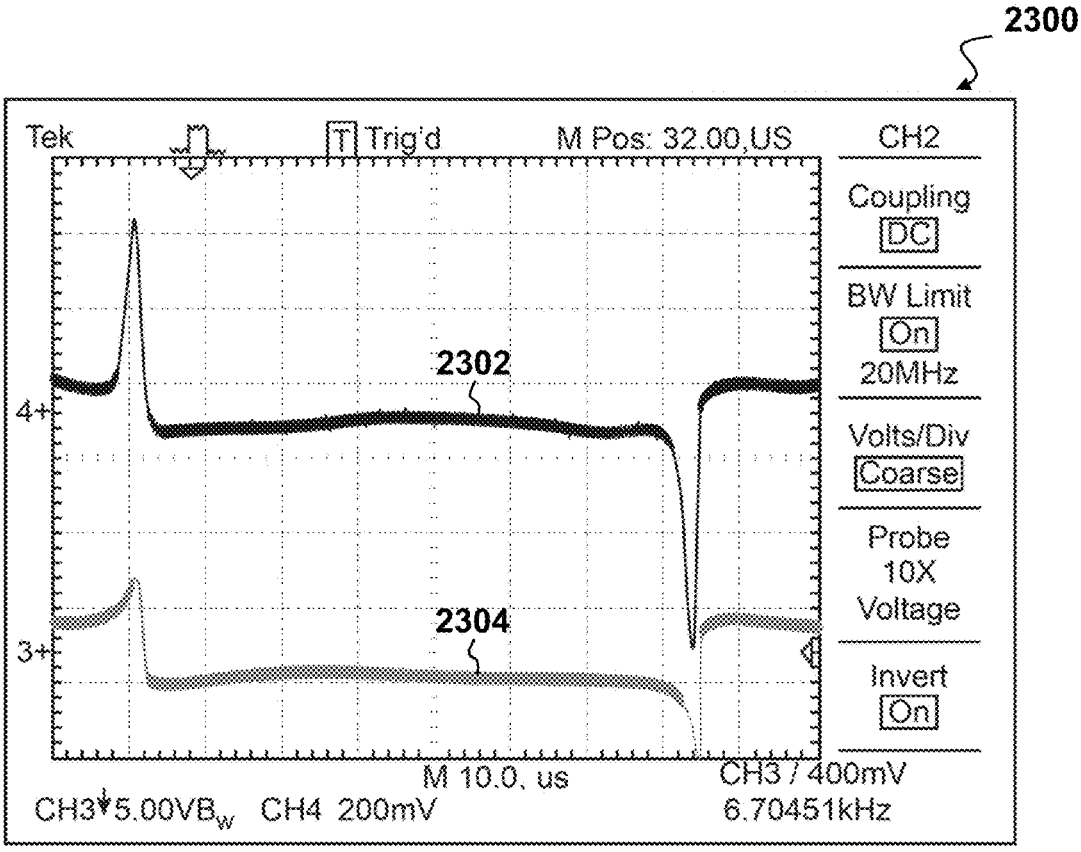
2300
Tek
Trig'd
M Pos: 32.00,US
CH2
Coupling
DC
BW Limit
On
20MHz
Volts/Div
Coarse
Probe
10X
Voltage
Invert
On
2302
2304
4+
3+
M 10.0, us
CH3 / 400mV
CH3 5.00VBW CH4 200mV
6.70451kHz

FIG. 23

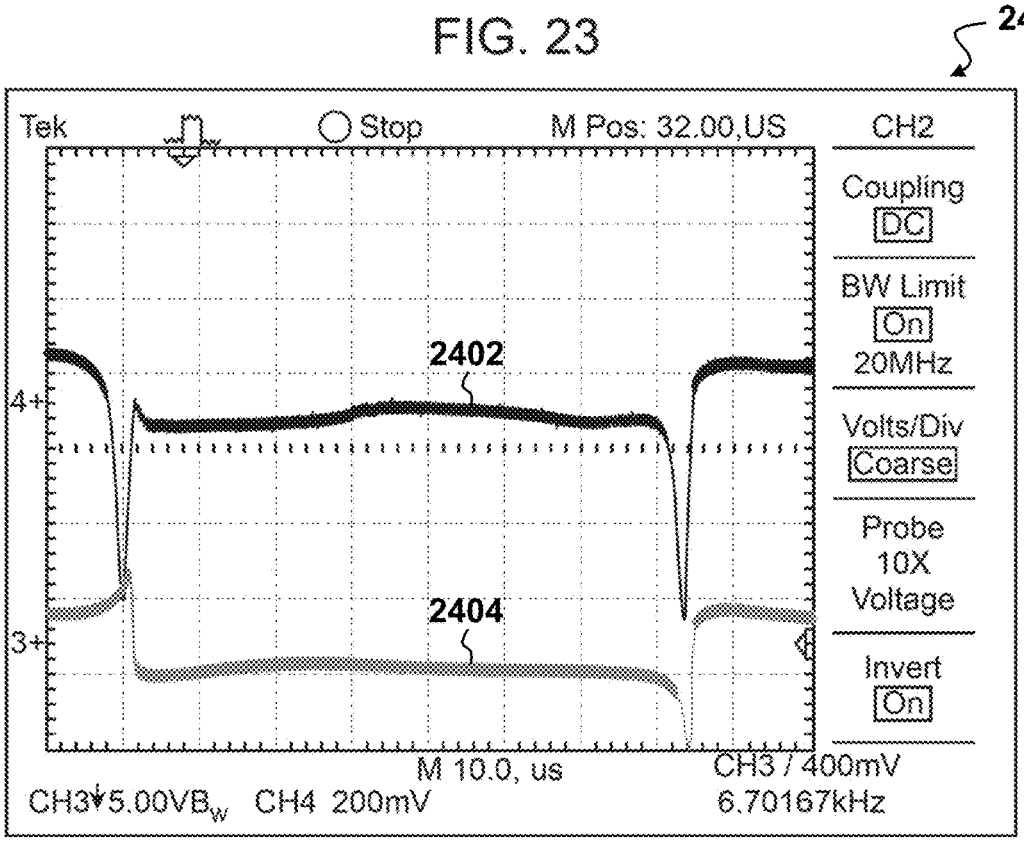
2400
Tek
Stop
M Pos: 32.00,US
CH2
Coupling
DC
BW Limit
On
20MHz
Volts/Div
Coarse
Probe
10X
Voltage
Invert
On
2402
2404
4+
3+
M 10.0, us
CH3 / 400mV
CH3 5.00VBW CH4 200mV
6.70167kHz

FIG. 24

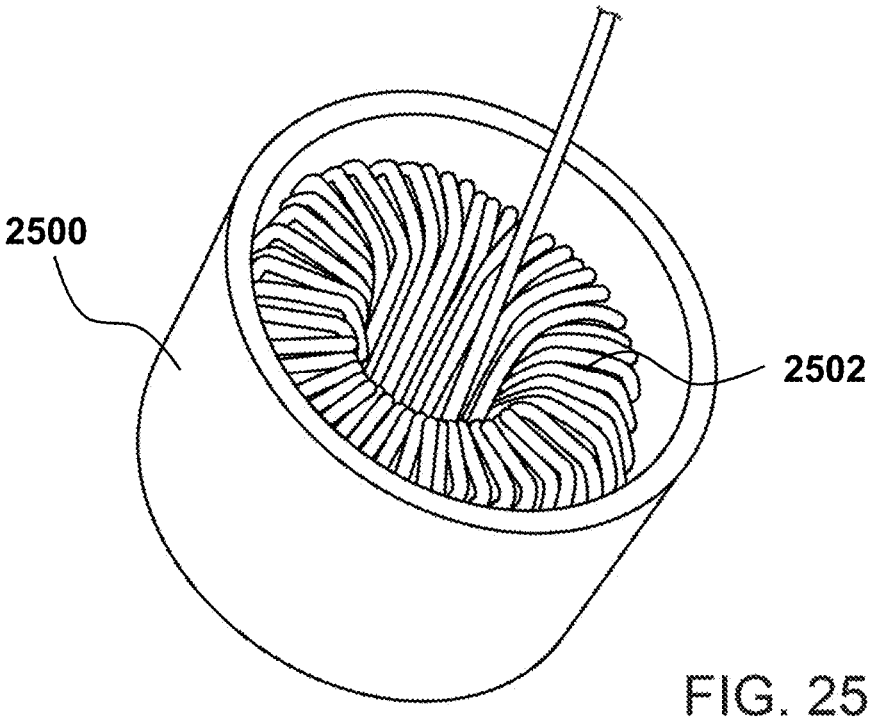

FIG. 25

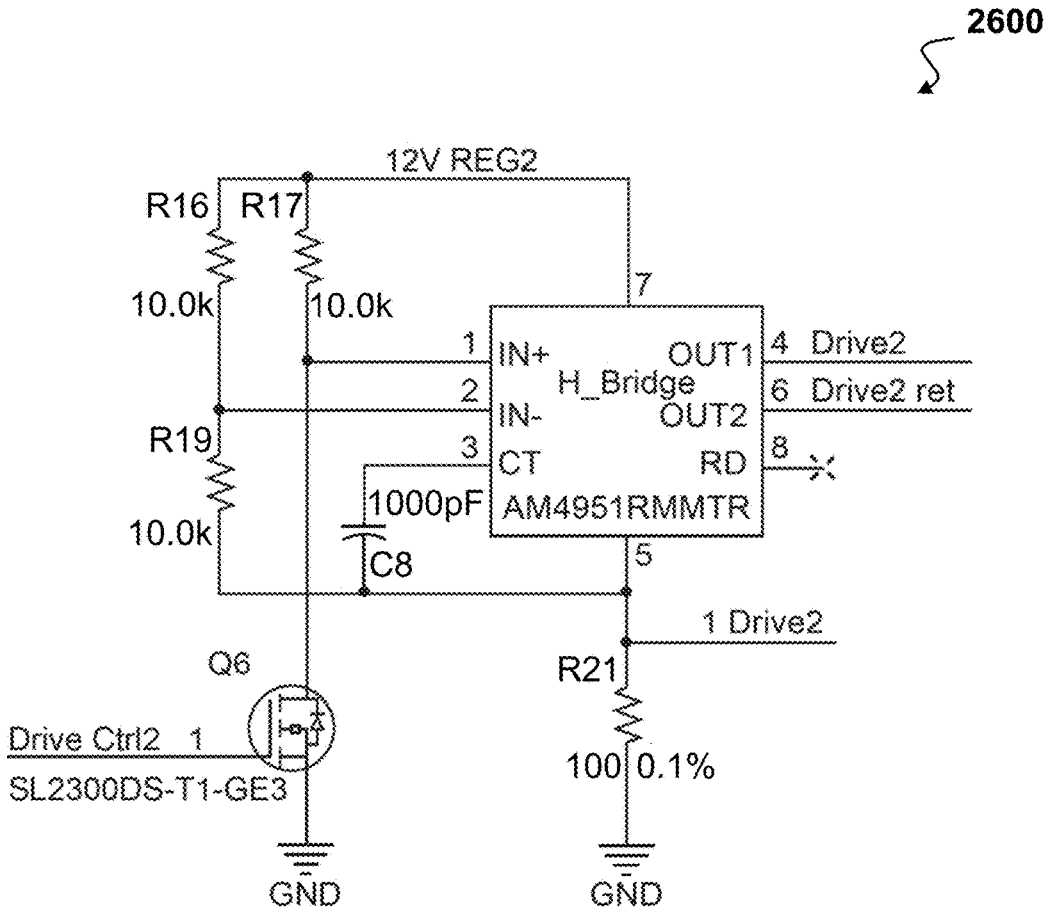
2600
12V REG2
R16
R17
10.0k
10.0k
7
1
IN+
OUT1
4 Drive2
H_Bridge
2
IN-
OUT2
6 Drive2 ret
R19
3
CT
RD
8
1000pF
AM4951RMMTR
10.0k
C8
5
1 Drive2
Q6
R21
Drive Ctrl2 1
SL2300DS-T1-GE3
100 0.1%
GND
GND

FIG. 26

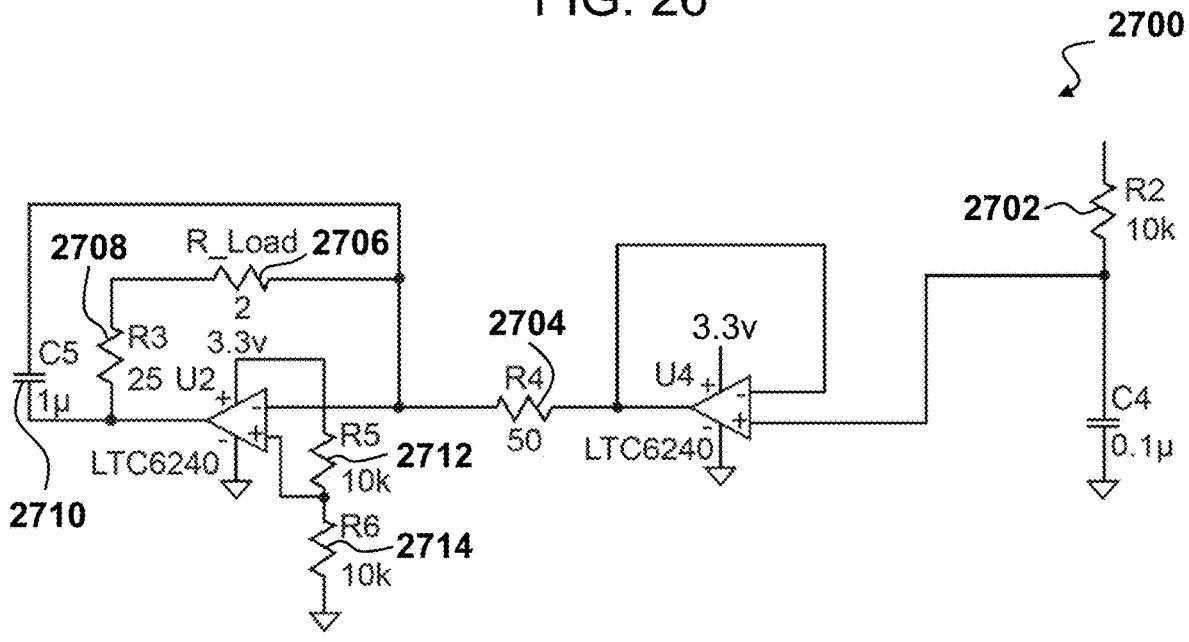
2700
2702
R2
10k
2708
R_Load
2706
2
R3
3.3v
2704
3.3v
C5
25 U2
R4
U4
1µ
C4
LTC6240
R5
2712
50
LTC6240
0.1µ
10k
2710
R6
2714
10k

FIG. 27

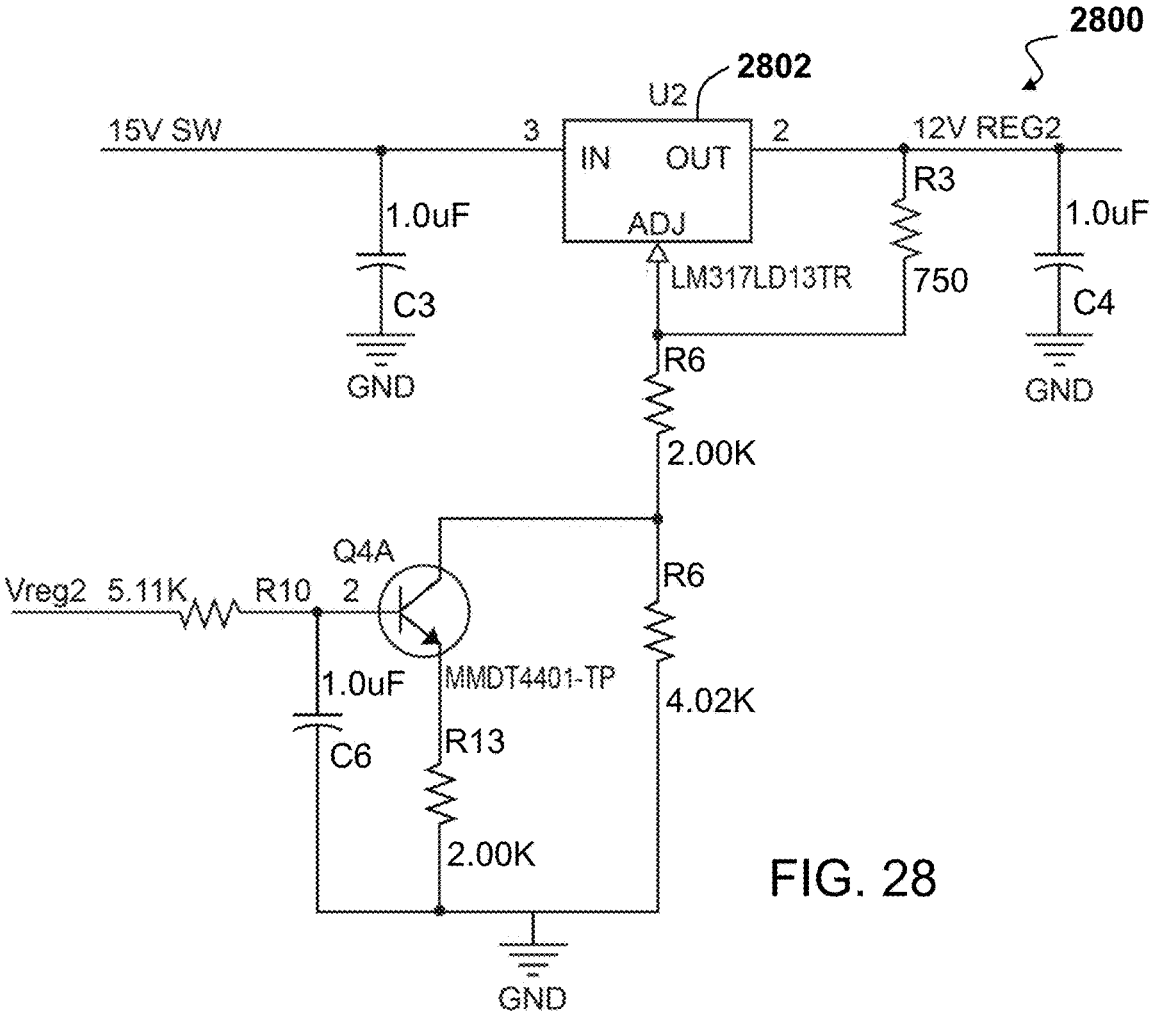
2800
2802
U2
15V SW
3
IN
OUT
2
12V REG2
ADJ
1.0uF
C3
GND
LM317LD13TR
R3
750
1.0uF
C4
GND
R6
2.00K
Q4A
Vreg2
5.11K
R10
2
R6
1.0uF
C6
MMDT4401-TP
4.02K
R13
2.00K
GND

FIG. 28

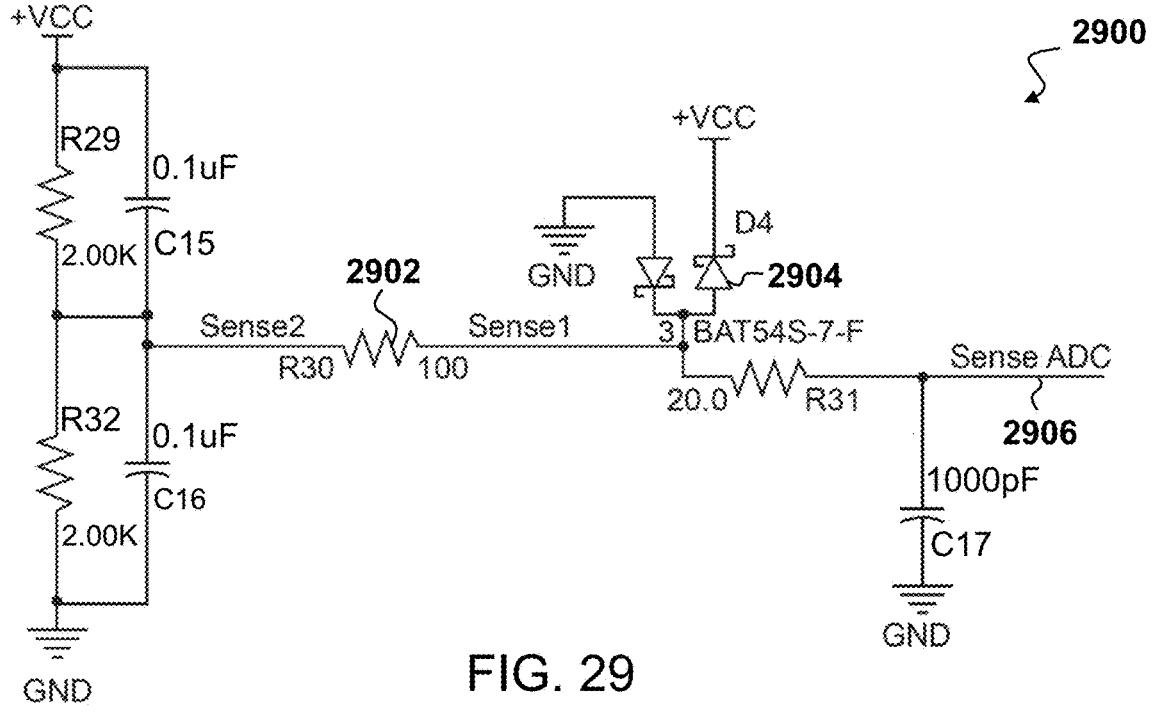
+VCC
2900
R29
0.1uF
2.00K
C15
+VCC
D4
GND
2902
2904
Sense2
Sense1
3
BAT54S-7-F
R30
100
20.0
R31
Sense ADC
2906
R32
0.1uF
C16
2.00K
1000pF
C17
GND
GND

FIG. 29

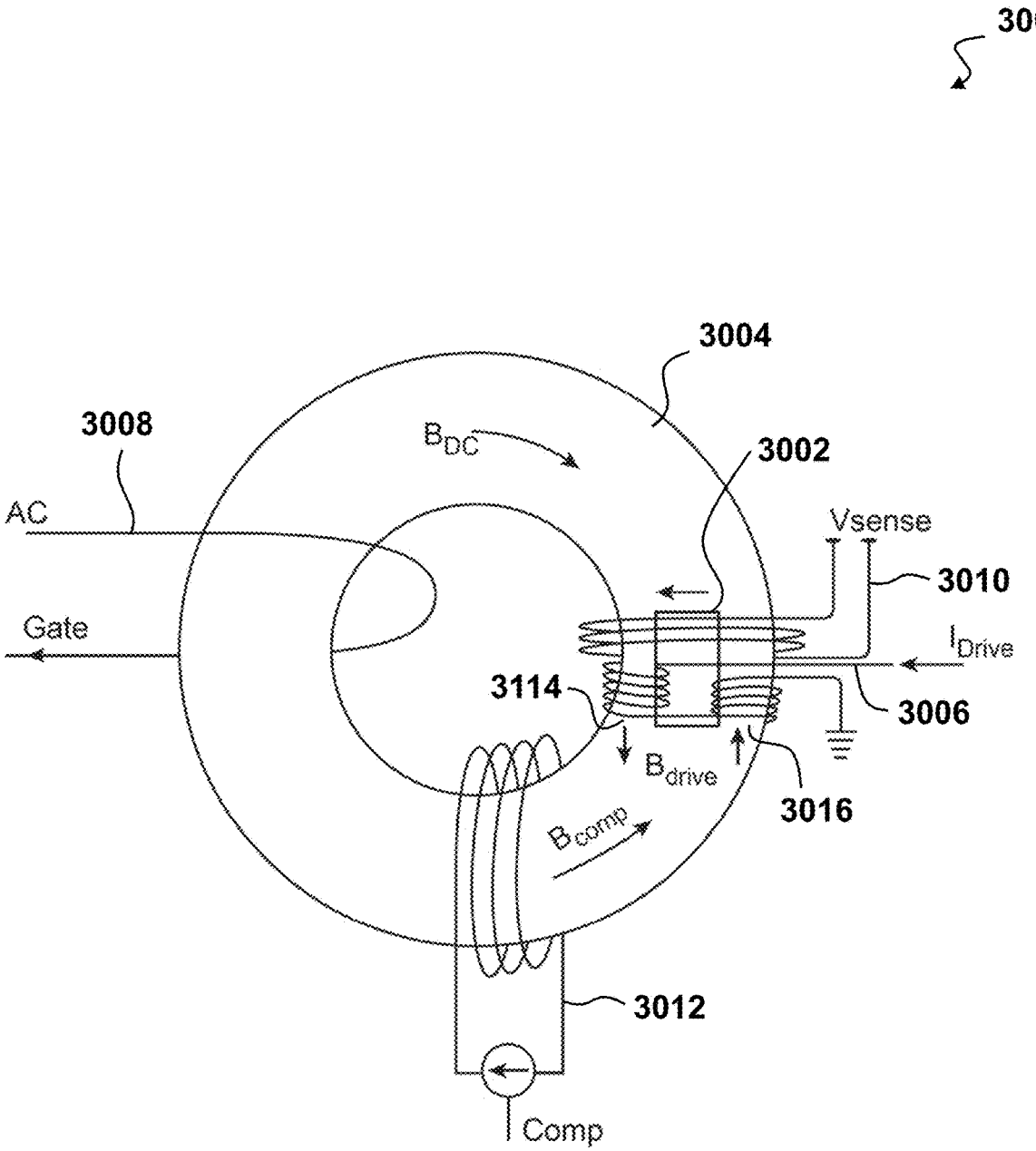
3000
3004
3008
B_{DC}
3002
AC
Vsense
3010
Gate
I_{Drive}
3114
3006
B_{drive}
3016
B_{comp}
3012
Comp

FIG. 30

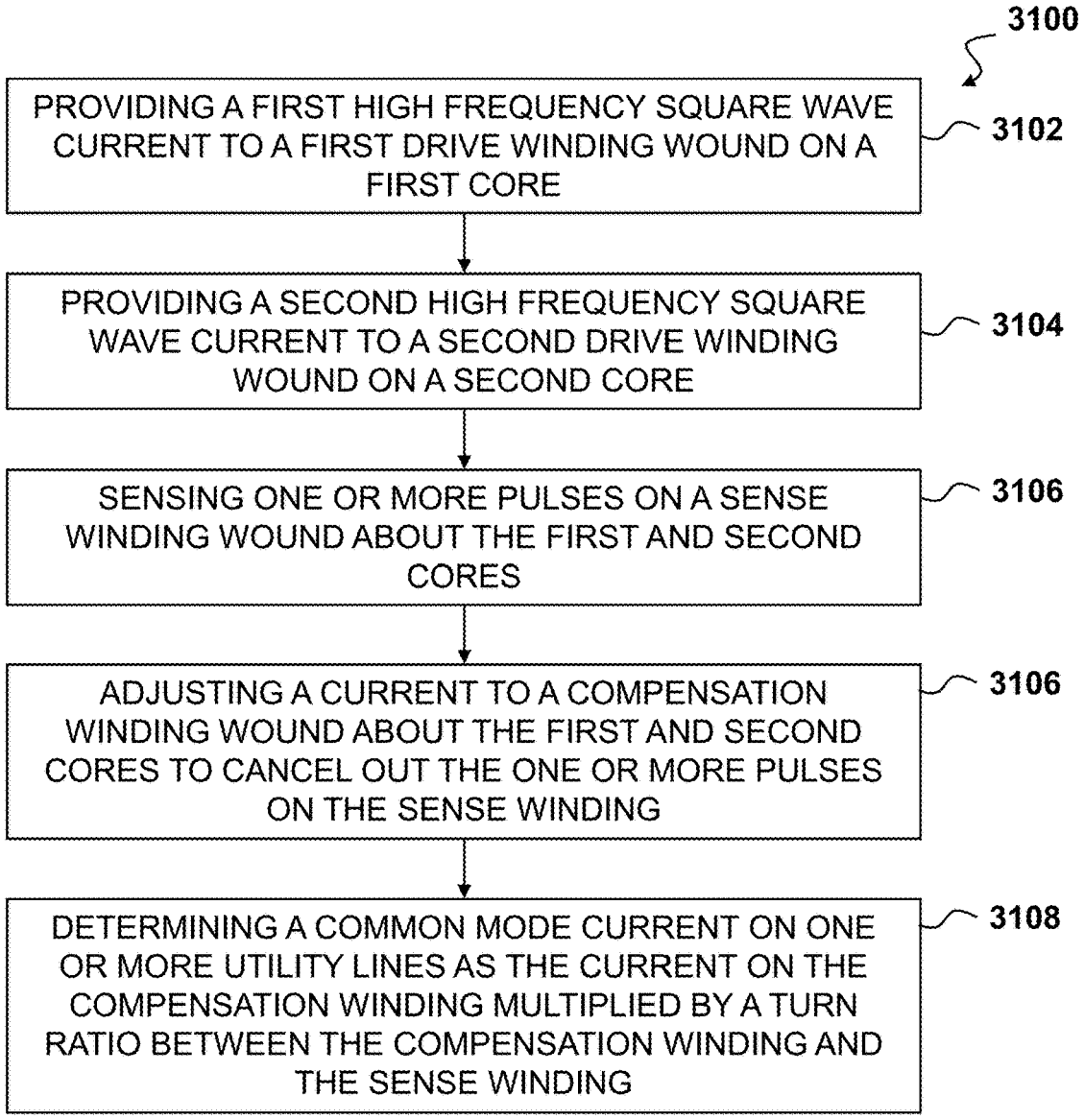
3100
PROVIDING A FIRST HIGH FREQUENCY SQUARE WAVE CURRENT TO A FIRST DRIVE WINDING WOUND ON A FIRST CORE
3102
PROVIDING A SECOND HIGH FREQUENCY SQUARE WAVE CURRENT TO A SECOND DRIVE WINDING WOUND ON A SECOND CORE
3104
SENSING ONE OR MORE PULSES ON A SENSE WINDING WOUND ABOUT THE FIRST AND SECOND CORES
3106
ADJUSTING A CURRENT TO A COMPENSATION WINDING WOUND ABOUT THE FIRST AND SECOND CORES TO CANCEL OUT THE ONE OR MORE PULSES ON THE SENSE WINDING
3106
DETERMINING A COMMON MODE CURRENT ON ONE OR MORE UTILITY LINES AS THE CURRENT ON THE COMPENSATION WINDING MULTIPLIED BY A TURN RATIO BETWEEN THE COMPENSATION WINDING AND THE SENSE WINDING
3108

FIG. 31

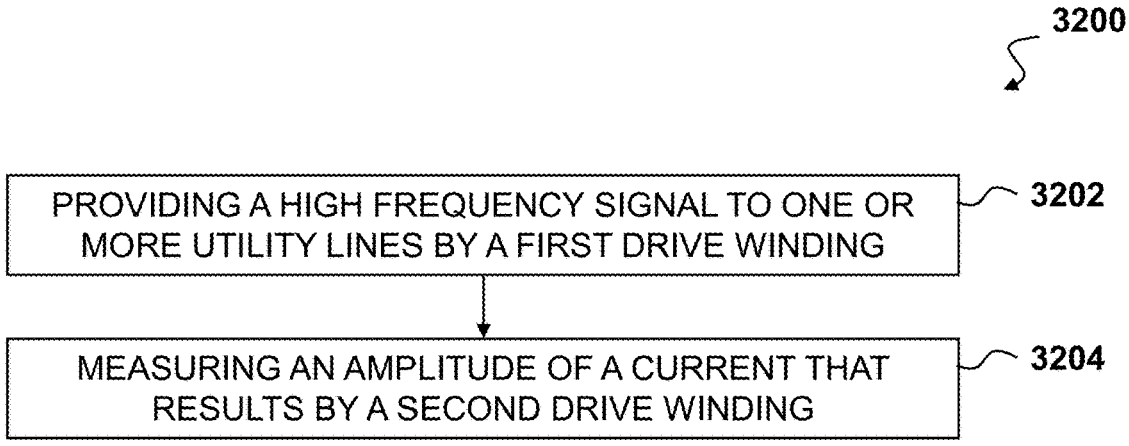
3200
PROVIDING A HIGH FREQUENCY SIGNAL TO ONE OR MORE UTILITY LINES BY A FIRST DRIVE WINDING
3202
MEASURING AN AMPLITUDE OF A CURRENT THAT RESULTS BY A SECOND DRIVE WINDING
3204

FIG. 32

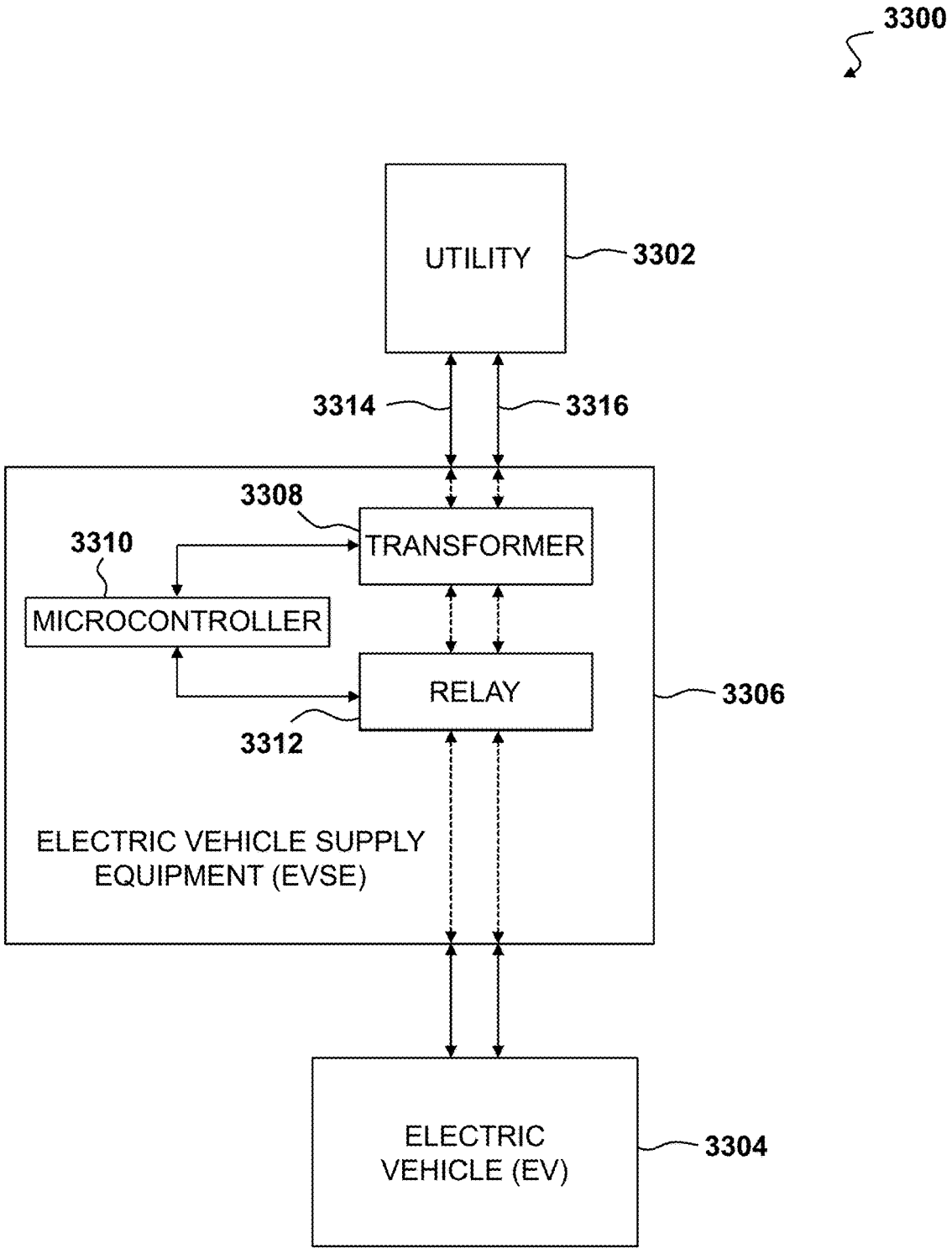
3300
UTILITY
3302
3314
3316
3308
TRANSFORMER
3310
MICROCONTROLLER
RELAY
3306
3312
ELECTRIC VEHICLE SUPPLY EQUIPMENT (EVSE)
ELECTRIC VEHICLE (EV)
3304

FIG. 33

RESIDUAL CURRENT DETECTING (RCD) AND GROUND IMPEDANCE MONITORING TRANSFORMER AND CONTROL METHODS

CROSS-REFERENCE TO RELATED APPLICATIONS

This application is a continuation of U.S. patent application Ser. No. 15/614,059 filed Jun. 5, 2017, which claims priority to and the benefit of U.S. Provisional Patent Application No. 62/346,287, filed Jun. 6, 2016, the contents of which are hereby incorporated by reference herein for all purposes.

TECHNICAL FIELD

Embodiments relate generally to systems, methods, and devices for safe charging, and more particularly to residual current detection (RCD) and ground monitor interrupter (GMI).

BACKGROUND

Residual current detection (RCD) and ground monitor interrupter (GMI) are essential functions for safe charging of electric vehicles. The RCD is responsible for interrupting AC power should a conduction path to ground appear in the charging circuit. For example, a person touching live components of an electric vehicle (EV) may cause a conduction path to ground.

The GMI ensures that the ground connection between the EV charger and a utility is continuous and of low impedance. The GMI interrupts AC power to the EV if the ground connection is non-continuous or has high impedance. High impedance or open ground connections may result in dangerous high voltages appearing on the chassis of the EV.

Conventional methods for detecting residual leakage current rely on current transformers, which may be sensitive to AC leakage currents, but can saturate and fail to operate should DC leakage current be present. EV and solar installations may contain dangerously high DC voltages that may cause DC leakage current to be present.

SUMMARY

Exemplary device embodiments may include a transformer including: a first drive winding wound on a first core, where the first drive winding may be driven with a first high frequency square wave current; a second drive winding wound on a second core, where the second drive winding may be driven with a second high frequency square wave current, and where the second high frequency square wave current may have an opposite polarity of the first high frequency square wave current; a sense winding wound across the first and second cores; and a compensation winding wound across the first and second cores; where one or more utility lines are threaded through a middle of the first and second cores, wherein a common mode current in the one or more utility lines causes one or more pulses to appear on the sense winding, wherein a current on the compensation winding is adjusted until the one or more pulses on the sense winding are cancelled out, and wherein the common mode current on the one or more utility lines is the adjusted current on the compensation winding multiplied by a turn ratio between the compensation winding and the sense winding.

In additional device embodiments, a net flux through the sense winding may be zero if no common mode current is present on the one or more utility lines. A saturation flux density of the first core may be substantially equal to the saturation flux density of the second core. A saturation flux density of the first core may be within 10% of the saturation flux density of the second core. The first core may have a lower saturation flux density than the second core, and the first drive winding may be driven with less current than the second drive winding such that the first core saturates at substantially the same time as the second core. The first drive winding may apply a high frequency signal to the one or more utility lines and the second drive winding may measure an amplitude of a current that results, where the amplitude of the current that results may be proportional to a reciprocal of a ground loop impedance. The common mode current in the utility line may be at least one of: an AC residual leakage current and a DC residual leakage current. The first core may be disposed substantially parallel to the second core.

Exemplary method embodiments may include: providing a first high frequency square wave current to a first drive winding wound on a first core; providing a second high frequency square wave current to a second drive winding wound on a second core, where the second high frequency square wave current may have an opposite polarity of the first high frequency square wave current; sensing one or more pulses on a sense winding wound about the first and second cores, where the one or more pulses may be created by a common mode current on one or more utility lines threaded through the first and second cores; adjusting a current to a compensation winding wound about the first and second cores to cancel out the one or more pulses on the sense winding; and determining the common mode current on the one or more utility lines as the current on the compensation winding multiplied by a turn ratio between the compensation winding and the sense winding.

In additional method embodiments, a saturation flux density of the first core may be substantially equal to the saturation flux density of the second core. A saturation flux density of the first core may be within 10% of the saturation flux density of the second core. The first core may have a lower saturation flux density than the second core, and the first drive winding may be provided with less current than the second drive winding such that the first core saturates at substantially the same time as the second core.

Additional method embodiments may include: measuring one or more peaks of a rising edge of the sensed one or more pulses by a first sample and hold circuit; measuring one or more peaks of a falling edge of the sensed one or more pulses by a second sample and hold circuit; determining a difference in magnitude between an average of the peaks of the rising edges and an average of the peaks of the falling edges; and adjusting at least one of: the first high frequency square wave current and the second high frequency square wave current based on the determined difference in magnitude, where the adjusted current may compensate for a difference in a saturation flux density between the first core and the second core. Method embodiments may also include: providing a high frequency signal to the one or more utility lines by the first drive winding; and measuring an amplitude of a current that results by the second drive winding, where the amplitude of the current that results may be proportional to a reciprocal of a ground loop impedance. The high frequency signal driven by the first drive winding may flow to a utility ground, to an electric vehicle service equipment (EVSE) through a ground wire, to ground filter capacitors of the EVSE and to ground filter capacitors of an electric vehicle (EV), to the second core, and to the first core.

No signal may be measured by the second core if a resistance of the utility ground is too high or open. The common mode current in the utility line may be at least one of: an AC residual leakage current and a DC residual leakage current.

Exemplary system embodiments may include: a microcontroller; a transformer including: a first drive winding wound on a first core, where the first drive winding may be driven with a first high frequency square wave current by the microcontroller; a second drive winding wound on a second core, where the second drive winding may be driven with a second high frequency square wave current by the microcontroller, and where the second high frequency square wave current may have an opposite polarity of the first high frequency square wave current; a sense winding wound across the first and second cores; and a compensation winding wound across the first and second cores; one or more utility lines, where the one or more utility lines may be threaded through a middle of the first and second cores, where a common mode current in the one or more utility lines may cause one or more pulses to appear on the sense winding, where a current on the compensation winding may be adjusted by the microcontroller until the one or more pulses on the sense winding are cancelled out, and where the common mode current on the one or more utility lines may be the adjusted current on the compensation winding multiplied by a turn ratio between the compensation winding and the sense winding.

Additional exemplary system embodiments may include: an electric vehicle supply equipment (EVSE), where the microcontroller, transformer, and one or more utility lines are part of the EVSE; a relay, where the relay is part of the EVSE; where the microcontroller may determine if the common mode current exceeds a set threshold, where the microcontroller may send a signal to a relay to cut power between the EVSE and a utility when the determined set threshold is exceeded. The first drive winding may apply a high frequency signal to the one or more utility lines, where the second drive winding may measure an amplitude of a current that results, where the amplitude of the current that results may be proportional to a reciprocal of a ground loop impedance, where the high frequency signal driven by the first drive winding may flow to a utility ground, to the EVSE through a ground wire, to ground filter capacitors of the EVSE and to ground filter capacitors of an electric vehicle (EV), to the second core, and to the first core.

BRIEF DESCRIPTION OF THE DRAWINGS

The components in the figures are not necessarily to scale, emphasis instead being placed upon illustrating the principals of the invention. Like reference numerals designate corresponding parts throughout the different views. Embodiments are illustrated by way of example and not limitation in the figures of the accompanying drawings, in which:

FIG. **1** depicts an electrical diagram of an exemplary transformer for detecting residual leakage current;

FIG. **2** depicts an exemplary transformer for detecting residual leakage current having two cores shown side-by-side;

FIG. **3** depicts a graph of voltage on an exemplary sense winding and current in exemplary drive windings as cores of an exemplary transformer are driven in and out of saturation;

FIG. **4** depicts two sample and hold circuits for an exemplary sense winding;

FIG. **5** depicts an idealized B-H curve of two poorly matched cores of a transformer driven in unison;

FIG. **6** depicts a graph of drive current and voltage on a sense winding for two poorly matched cores of a transformer driven in unison;

FIG. **7** depicts a B-H curve of two well-matched cores of a transformer driven in unison;

FIG. **8** depicts a graph of drive current and voltage on a sense winding for two well-matched cores of a transformer driven in unison with a DC leakage current present;

FIG. **9** depicts an exemplary circuit for balancing two cores of a transformer with individual drive currents;

FIG. **10** depicts a circuit of exemplary drive winding drivers;

FIG. **11** depicts an exemplary flip flop circuit for changing polarity on a drive command signal and its inverse;

FIG. **12** depicts a circuit of an exemplary compensation winding of a transformer;

FIG. **13** depicts a circuit of an exemplary ground loop of an electric vehicle supply equipment (EVSE);

FIG. **14** depicts a circuit of an exemplary ground impedance monitoring (GMI) detector;

FIG. **15** depicts a graph of drive current, output voltage on a sense winding, and drive voltage of a transformer with well-matched cores and no current applied;

FIG. **16** depicts a graph of drive current, output voltage on a sense winding, and drive voltage of a transformer with well-matched cores and 6 mA current applied;

FIG. **17** depicts a graph of drive current, output voltage on a sense winding, and drive voltage of a transformer with unmatched cores and no current applied;

FIG. **18** depicts a graph of drive current, output voltage on a sense winding, and drive voltage of a transformer with unmatched cores and 6 mA current applied;

FIG. **19** depicts a circuit for generating a square wave for drive windings of a transformer;

FIG. **20** depicts two sample and hold circuits for an exemplary sense winding;

FIG. **21** depicts a circuit of an exemplary compensation controller of a transformer;

FIG. **22**A depicts a graph of a sensor input and output for a 60 Hz sinewave;

FIG. **22**B depicts a graph of a sensor input and output for a 60 Hz triangle wave;

FIG. **22**C depicts a graph of a sensor input and output for a 0.6 Hz square wave;

FIG. **23** depicts a graph of a sense winding signal caused by an external magnetic field;

FIG. **24** depicts a graph of a leakage current producing a common mode signal;

FIG. **25** depicts an exemplary shielding of an exemplary transformer to contain electromagnetic interference (EMI);

FIG. **26** depicts a circuit of an exemplary H-bridge driver;

FIG. **27** depicts a circuit of an exemplary compensation winding driver;

FIG. **28** depicts a circuit of an adjustable drive voltage;

FIG. **29** depicts a circuit for signal conditioning an exemplary sense winding signal;

FIG. **30** depicts an exemplary alternate transformer embodiment having a window for a fluxgate;

FIG. **31** depicts a flowchart of an exemplary residual current detecting (RCD) method;

FIG. **32** depicts a flowchart of an exemplary ground monitor interrupter (GMI) method; and

FIG. **33** depicts an exemplary system having residual current detecting (RCD) and ground monitor interrupter (GMI) to cut power between a utility and an electric vehicle if a fault is detected.

DETAILED DESCRIPTION

The present system allows for a DC and AC sensitive transformer for detection of residual leakage current, and associated drive circuitry, which is also able to measure the impedance of the ground connection. The system can measure leakage currents as small as 6 mA with sub milliamp accuracy in the presence of charging currents as high as 80 A.

FIG. **1** depicts an electrical diagram **100** of an exemplary transformer for detecting residual leakage current. The transformer includes two saturable magnetic cores **102**, **104**. The cores may be made of a highly "square" magnetic material such as permalloy, metglass, supermalloy, nanoperm, mu-metal, etc. The transformer also includes one or more primary conductors **106**. The transformer measures the common mode current on the one or more primary conductors **106**. A compensation winding **108** may be wound on both cores **102**, **104**. The compensation winding **108** may be used to linearize the measurement of the common mode current. A sense winding **110** may also be wound on both cores. The sense winding may be used to determine a magnitude and direction of the common mode current on the one or more primary conductors **106**. The transformer may also include a first drive winding **112** on the first core **102** and a second drive winding **114** on the second core **104**. The drive windings **102**, **104** may be used to drive their respective cores **102**, **104** in and out of saturation. The drive windings **102**, **104** may also be used to perform ground monitor interrupter (GMI) source and residual current detection (RCD) functions.

FIG. **2** depicts an exemplary transformer **200** for detecting residual leakage current having two cores **202**, **204** shown side-by-side. A first core **202** and a second core **204** may be made from a square hard saturating material, such as permalloy or metglass. The first core **202** and the second core **204** should reasonably well matched, particularly their saturation flux densities (Bmax). A first drive winding **206** is wound on the first core **202**. A second drive winding **208** is wound on the second core **204**. A sense winding **210** is wound across both cores **202**, **204**. A compensation winding **212** is also wound across both cores **202**, **204**. A utility line **214** is threaded through the middle of both cores **202**, **204**. The utility line **214** may be an AC conductor of an electric vehicle supply equipment (EVSE). The transformer **200** may be placed about the utility line **214** between a utility power source **222** and an electric vehicle (EV) **224**. The magnetic field direction **218** of the first core **202** and the magnetic field direction **220** of the second core **204** are shown with arrows.

The cores **202**, **204** are displayed side-by-side for illustration purposes. In some embodiments, the cores **202**, **204** may be stacked on top of one another such that the first core **202** is substantially parallel to the second core **204**.

The transformer **200** may provide residual current detection (RCD) functionality. Each of the drive windings **206**, **208** may be driven with a high frequency square wave current **216**. The current **216** may drive the cores **202**, **204** into saturation. Once the cores saturate, the polarity of the drive current **216** may be reversed. As a result, the net flux through the sense winding **210** is zero since the flux from the drive currents **206**, **208** is identical in the first core **202** and the second core **204**, but of opposite polarity.

When a common mode, or leakage, current is present in the utility line **214**, it adds to the flux in one core and subtracts from the flux in the other. This change in flux will cause one core to saturate before the other core, and the flux through the sense winding **210** no longer cancels. When one core saturates and the other doesn't saturate, the current in the drive windings **206**, **208** will couple through the non-saturated core into the sense winding **210**. Pulses will appear on the sense winding **210** every time the cores **202**, **204** are driven into saturation. The amplitude and polarity of the pulses are indicative of the common mode current on the utility line **214**.

FIG. **3** depicts a graph **300** of voltage on an exemplary sense winding **302** and current in exemplary drive windings **304** as cores of an exemplary transformer are driven in and out of saturation.

FIG. **4** depicts two sample and hold circuits **400** for an exemplary sense winding. In RCD mode, the sense winding **402** is connected through a switch **404** to a burden resistor **406** and an amplifier **408**. The voltage of the peaks on the sense winding, as shown in FIG. **3**, is measured by two sample and hold (S/H) circuits **410**, **412** that are alternately triggered by the rising edge the drive command signal **414**, as shown in FIG. **3**. The acquisition time of the S/H **410**, **412** is matched to a pulse width of pulses on the sense winding **402**.

FIG. **5** depicts an idealized B-H curve **500** of two poorly matched cores **502**, **504** of a transformer driven in unison. The B-H curve shows the relationship between magnetic flux density (B) and magnetic field strength (H) for each of the core **502**, **504** materials. The first core **502** has a higher saturation flux density (Bsat) than the second core **504**. Therefore, the first core **502** saturates later than the second core **504**. A drive current on the first core **502** would couple into a sense winding of the transformer every time the cores **502**, **504** saturate.

The disclosed transformer relies on the flux in the two cores being substantially equal, and so the cores need to be reasonably well matched, particularly their saturation flux density (Bmax). If the cores are not well matched, a spurious signal may appear on the sense winding even when there is no current flowing in the primary conductors. Temperature variation, age related drift, and external magnetic fields may cause similar spurious signals. These spurious signals must be detected and compensated for to prevent offsets in the leakage current measurement.

The signal from mismatched cores is different from a signal from an actual current flowing on the primary. In the case of a core mismatch, the core with the lower saturation flux density (Bsat) will always saturate first regardless of drive polarity, as long as there's no current in the primary. Having one core saturate before the other will result in the drive current from the other core coupling into the sense winding every time the core saturates. Since the drive current alternates between positive and negative, this will result in pulses on the sense winding of alternating polarity.

FIG. **6** depicts a graph **600** of drive current **602** and voltage **604** on a sense winding for two poorly matched cores of a transformer driven in unison. Mismatched cores, temperature drift and external magnetic fields may cause pulses of alternating polarity on the sense winding when the two cores of the transformer saturate.

FIG. **7** depicts a B-H curve **700** of two well-matched cores **702**, **704** of a transformer driven in unison. Two well-matched cores **702**, **704** are shown in the presence of a common mode current on the primaries. When a positive drive current (H) is applied, the second core **704** saturates first and a drive current couples into the sense winding through the first core **702**. When a negative drive current (H) is applied, the first core **702** saturates first and a drive current couples through the second core **704**. The second core **704**

is wound with opposite polarity from the first core **702** so the resulting pulse on the sense winding is again positive.

For matched cores **702**, **704** in the presence of a common mode current on the primary, the core that saturates will alternate depending on the drive current direction. This alternating saturation results in the current in the first drive winding and the current in the second drive winding alternatingly coupling into the sense winding. The two drive windings are wound in opposing directions so the end result is that the pulses in the sense winding are of the same polarity.

FIG. **8** depicts a graph **800** of drive current **802** and voltage **804** on a sense winding for two well-matched cores of a transformer driven in unison with a DC leakage current present. A common mode current in primary conductors results in pulses of the same polarity when the cores saturate.

FIG. **9** depicts an exemplary circuit **900** for balancing two cores of a transformer with individual drive currents. Both cores will never be perfectly matched. Compensating for some degree of mismatching between the cores may be achieved by driving the two cores with individual drive current. The core with the lower saturation flux density (Bsat) may be driven with less current than the core with higher Bsat. By varying the current to each of the cores based on their Bsat, both cores may be made to saturate at the same time and spurious signals may be eliminated or greatly reduced. Magnetic field (H) (At/m) is a function of current, and current through an inductor is a function of the product of voltage and time (Vs). Regulating the voltage that is applied to the drive winding allows for compensating for differences in Bsat between the two cores.

FIG. **10** depicts a circuit **1000** of exemplary drive winding drivers. A proportional-integral-derivative (PID), or similar, controller may be used to regulate out a difference in magnitude between two pulses measured by the sample and hold circuit as shown in FIG. **4**.

An output of the balance controller **1002**, as shown in FIG. **9**, may be added **1004** to the magnitude of a drive command signal **1008** of one core, and subtracted from **1006** the magnitude of a drive command signal **1010** of the other core. The drive commands **1008**, **1010** may be fed through selector switches **1012**, **1014** to output drive buffers **1016**, **108** that feed the drive windings **1020**, **1022** through current limiting resistors **1024**, **1026**. The current through each drive winding **1020**, **1022** is measured **1028**, **1030**; rectified; and sent to a comparator **1032**, **1034** that compares it against a saturation threshold. When the drive current magnitude is higher than the set threshold, the core has saturated and the output of the comparator **1032**, **1034** goes high.

FIG. **11** depicts an exemplary flip flop circuit **1100** for changing polarity on a drive command signal and its inverse. The output of the two comparators causes a flip flop circuit to change polarity on the drive command signal (Drive) and it's inverse (!Drive).

FIG. **12** depicts a circuit **1200** of an exemplary compensation winding of a transformer. The amplitude and polarity of the pulses on a sense winding of the transformer give an indication of the common mode current flowing on primary conductors. Due to the nonlinear nature of magnetic cores, the pulses on the sense winding do not provide an accurate measurement. In order to get an accurate measurement, a compensation winding **1202** is required. The current in the compensation winding **1202** is adjusted until the pulses on the sense winding go away, which can only happen when the current in the compensation winding **1202** perfectly matches the common mode current in the primary conductors. The primary current can therefore be calculated as the current in the compensation winding multiplied by the turn ratio between the two.

A PID, or similar, controller may be used to regulate out the average voltage of the pulses on the sense winding. The output of a regulator may be used to control a current source that drives a current through the compensation winding **1202** in RCD mode. The leakage current **1204**, or the common mode current, in the primary conductors may be accurately determined as the output of the regulator multiplied by the turn-ratio of the compensation windings **1202** to the primary windings.

FIG. **13** depicts a circuit **1300** of an exemplary ground loop of an electric vehicle supply equipment (EVSE) **1301**. For safety reasons, regulatory agencies, such as UL headquartered in Northbrook, Ill., requires the EVSE **1301** to verify that the EVSE **1301** and an electric vehicle (EV) **1302** are both properly grounded **1304**. The ground connection **1304** between vehicle **1302** and EVSE **1301** may be verified by a pilot handshake signal, such as that specified in SAE J1772. A ground resistance **1306** between a utility **1308** and the EVSE **1301** must however be verified by other means.

In ground monitor interrupter (GMI) mode, the fluxgate transformer may be reconfigured as a signal generator and detector. A first core of the transformer and its respective drive winding **1310** may be used to apply a high frequency signal to the utility lines **1312**, **1314**. The second core of the transformer and its respective drive winding **1316** may be used to measure the amplitude of a current that results. The amplitude of the resulting current is proportional to a reciprocal of the ground loop impedance.

The high frequency current generated by the first drive winding **1310** flows through the utility transformer into ground **1304**; back to the EVSE through the ground wire **1318**; to ground filter capacitors **1320**, **1322**, **1324** of the EVSE **1301** and EV **1302**, respectively; through the second core and back to the first core. If the resistance of the ground connection is too high, or open, no current can flow and no signal will be measured by the second core.

During the GMI test, the sense winding and compensation winding must be open circuit, which is accomplished by selector switches **1326**, **1328**. The drive circuit for the first drive winding **1310** is switched over to a high frequency signal source. The drive circuit for the second drive winding **1316** is held in a high impedance state.

FIG. **14** depicts a circuit **1400** of an exemplary ground impedance monitoring (GMI) detector. The second drive winding **1316** is also connected to a detector circuit **1400** through DC blocking capacitors **1402**, **1404**.

An amplifier **1406** buffers the signal from the drive winding **1316** and feeds it through a bandpass filter **1408** with a center frequency around the high frequency source feeding the first drive winding **1316**. The filtered signal is fed to a mixer **1410**, the local oscillator input **1412** of which is fed by a high frequency signal. The high frequency signal **1412** is the same frequency as the drive, but with a different phase shift. The output of the mixer is integrated **1413** in order to measure the resulting DC signal magnitude. The output of the integrator **1414** is now proportional to the reciprocal of the ground loop impedance. The capacitive or inductive nature of the ground impedance can be determined by adjusting the phase shift of the local oscillator **1412**.

FIG. **15** depicts a graph **1500** of drive current **1502**, output voltage **1504** on a sense winding, and drive voltage **1506** of a transformer with well-matched cores and no current applied. For a matched core test, a sensor was constructed from a pair of well matched cores (<0.5%). The drive

winding may have 10 turns per core, the sense winding have may 10 turns, and a primary wire may be fed through the opening of both cores to measure the DC current in the primary wire. The drive winding is driven from a function generator at 10 kHz through a DC blocking capacitor and a 10 ohm resistor for measuring current. The output voltage **1504** is close to 0 as the flux in the two cores cancel.

FIG. **16** depicts a graph **1600** of drive current **1602**, output voltage **1604** on a sense winding, and drive voltage **1606** of a transformer with well-matched cores and 6 mA current applied. A significant output voltage **1604** can be seen on the sense winding when the fault current is applied, as compared to the output voltage on the sense winding with no current applied as in FIG. **15**.

FIG. **17** depicts a graph **1700** of drive current **1702**, output voltage **1704** on a sense winding, and drive voltage **1706** of a transformer with unmatched cores and no current applied. With no DC fault current applied, the unmatched cores produce noticeably greater signal amplitude than the matched cores, as shown in FIG. **15**. The cores shown in graph **1700** have a matching error of 10%. Ideally, the cores may have a matching error of 5% or lower, but the cores may be balanced with a matching error of up to 10%. The transformer with these unmatched cores has twenty-turn drive windings, twenty-turn sense windings, and a single turn compensation winding on only one of the cores.

FIG. **18** depicts a graph of drive current **1802**, output voltage **1804** on a sense winding, and drive voltage **1806** of a transformer with unmatched cores and 6 mA current applied. With 6 mA of DC fault current applied, the unmatched transformer produces less symmetrical output for rising and falling transition than the matched sensor, as shown in FIG. **16**, but the signal amplitude remains significant. The most consistent signal component is the rapid transition of the drive current **1802** and output voltage **1804** around the rising edge of the drive voltage **1806** waveform. This signal may be fully and consistently canceled by adjusting the current in the compensation winding.

In some embodiments, the transformer may be subject to variations in temperature. After being heated for five minutes, the signal remained consistent. If anything, the amplitude of the signal became more symmetrical at the rising and falling edges. The compensation current necessary to cancel the output remained consistent with no significant (<10%) drift at 6 mA fault current. Both cores of the transformer tend to change temperature at the same rate due to their proximity and so any variations are largely cancelled out.

FIG. **19** depicts a circuit **1900** for generating a square wave for drive windings **1901**, **1903** of a transformer. An analog device may be constructed to generate a signal for the drive windings using: a quad operational amplifier (op-amp) **1902**; a sample and hold integrated circuit (IC) **1904**; transistors **1906**, **1908**; potentiometers **1910**, **1912** for tuning; resistors **1914**, **1916**, **1918**, **1920**, **1922**; and capacitors **1924**.

The drive circuit **1900** generates the square wave for the drive windings **1901**, **1903**. The op-amp **1902** used as a comparator applies a voltage to the drive windings **1901**, **1903** through a buffer. When the cores saturate, the current rises rapidly and the voltage across Rsense **1922** exceeds the trip threshold for the comparator, which then trips and reverses the output voltage. This arrangement ensures that the cores are always driven to the same level of saturation regardless of supply voltage variations or core parameters.

A second comparator **1904** with an adjustable trip threshold is used to generate the sample pulse for the sample and hold circuit. The second comparator **1904** may be adjusted to trip just before the first comparator. The potentiometer **1910** is connected in parallel with the drive windings **1901**, **1903**, which makes it possible to compensate for the effect of poorly matched cores. The amount of current through each core can be adjusted so that the cores always saturate at the same time.

FIG. **20** depicts two sample and hold circuits **2000** for an exemplary sense winding **2002**. A single sample and hold integrated circuit (IC) **2004** may be very sensitive to external magnetic fields and temperature drift. A second sample and hold IC **2006** allows both a rising edge **2008** and a falling edge **2010** of a pulse **2012**, **2014** to be sampled. The average of the rising edge **2008** and the falling edge **2010** may be fed to a proportional-integral (PI) regulator.

FIG. **21** depicts a circuit **2100** of an exemplary compensation controller of a transformer. The PI regulator tries to cancel out the signal from the sense winding by running a current through a compensation winding **2102**, the current through the compensation winding **2102** is proportional to the DC leakage current when the PI error is zero. The voltage across the burden resistor Rburden **2104** is therefore a direct measurement of the leakage current.

FIG. **22**A depicts a graph **2200** of a sensor input **2206** and output **2208** for a 60 Hz sinewave. FIG. **22**B depicts a graph **2202** of a sensor input **2210** and output **2212** for a 60 Hz triangle wave. FIG. **22**C depicts a graph **2204** of a sensor input **2214** and output **2216** for a 0.6 Hz square wave. The transformer is able to measure up to 600 Hz without significant reduction in gain, and better tuning of the PI could improve that further.

FIG. **23** depicts a graph **2300** of a sense winding voltage **2302** and current **2304** signals caused by an external magnetic field. The transformer may be sensitive to external magnetic fields. External magnetic fields may have the same effect as poorly matched cores and temperature drift. External magnetic fields produce a differential signal between rising and falling edge pulses.

FIG. **24** depicts a graph **2400** of a leakage voltage **2402** and current **2404** signals producing a common mode signal. The leakage signals **2402**, **2404** produces a common mode signal. Adding a second sample and hold IC and regulating the average of the two pulses drastically reduces sensitivity to core matching, temperature drifts, and external fields. The differential signal caused by external fields may be tuned out using a core balance potentiometer. Dynamic control over the core balancing allows for tuning of the cores in response to changing external conditions. Tuned cores may produce less noise on the AC line and may be less susceptible to the noise on the AC line. Using two sampling circuits may eliminate spurious signals from core mismatch, temperature drift, and external magnetic fields.

FIG. **25** depicts an exemplary shielding **2500** of an exemplary transformer **2502** to contain electromagnetic interference (EMI). A magnetic shield **2500** made of soft iron may be placed around the transformer **2502** to reduce and/or eliminate spurious signals caused by external magnetic fields. A cylindrical shield, such as a steel pipe, may be placed around the transformer **2502** to reduce the effects of external magnetic fields by an order of magnitude. The shielding **2500** may also contain any EMI caused by the constant switching of the drive windings and saturating cores. The magnetic shield **2500** greatly reduces sensitivity to external magnetic fields.

FIG. **26** depicts a circuit **2600** of an exemplary H-bridge driver. An I_DriveX signal is a measurement of the drive current and may be fed to an analog comparator. A drive

winding driver may use an off-the-shelf H-bridge. This circuit **2600** may not have GMI capability.

FIG. **27** depicts a circuit **2700** of an exemplary compensation winding driver. A compensation winding current may be precisely controlled, as it provides the measurement of the leakage current. The circuit **2700** takes a pulse width modulation (PWM) proportional to desired current where 50%=0 current as its input. The PWM is applied to R2 **2702**. The filtered voltage across R4 **2704** sets the current through the Rload **2706**, which is the compensation winding. R3 **2708** provides a minimum impedance and improves the effect of the filter capacitor C5 **2710**. R5 **2712** and R6 **2714** set the 0 current point. Rload **2706** is the compensation winding. This circuit **2700** may not have GMI functions.

FIG. **28** depicts a circuit **2800** of an adjustable drive voltage. The drive voltage for each core may be adjustable in order to compensate for core matching and drift. Each H bridge IC may supplied by a LM317 regulator **2802**. The processor may reduce the output voltage of the regulator by PWM. The output voltage may be adjusted from 8-12 V. Adjusting the output voltage may be used to adjust the drive voltage for the drive winding, using an adjustable voltage regulator to feed the H-bridge.

FIG. **29** depicts a circuit **2900** for signal conditioning an exemplary sense winding signal. A sense winding is connected to a 100 ohm burden resistor **2902**, which may be biased at a VCC midpoint using a resistive/capacitive divider. The voltage across the burden resistor **2902** may spike up to +−1 V during normal operation. A Schottky diode **2904** protects an ADC input **2906** from abnormal spikes. This circuit **2900** may not have GMI functionality.

FIG. **30** depicts an exemplary alternate transformer **3000** embodiment having a window **3002** for a fluxgate. This transformer **3000** may not have a GMI mode. The transformer **3000** may have a magnetic core **3004** of a high mu material with the window **3002** for a fluxgate cut into it. The window **3002** goes through the entire magnetic core **3004**. A fluxgate drive winding **3006** may saturate the left and right halves of the window at 10 kHz with opposite polarities. The drive winding **3006** may be present on each leg **3014**, **3016** of the window **3002**. There may be about twenty turns of the drive winding **3006** on each leg **3014**, **3016** of the window. In the presence of a magnetic field caused by DC leakage current in a utility line **3008**, a pulsating voltage appears on a sense winding **3010**. The leakage current adds to the flux of one of the legs **3014** and subtracts from the flux of the other leg **3016**, which results on a voltage on the sense winding **3010**. The sense winding **3010** may be wound across both legs of the magnetic core **3004**, but not through the window **3002**. The Earth's magnetic flux may not significantly affect the reading (0.1-0.2%). This transformer is small, inexpensive, has a simple installation requiring only one turn of the utility line **3008**, it is EMI immune and has low emissions, it has a high bandwidth and will measure AC leakage and DC leakage, and has a low sensitivity to external magnetic fields.

A compensation winding **3012** may be driven by a microprocessor to cancel out the voltage. Any pulses on the sense winding **3010** may be provided to a microprocessor so that they may be cancelled out by the compensation winding **3012**. The microprocessor may determine a leakage current on the utility line **3008** as the amount of compensation current needed in the compensation winding **3012** to cancel out the pulses on the sense winding **3010** is equal to the leakage current on the utility line **3008**.

FIG. **31** depicts a flowchart of an exemplary residual current detecting (RCD) method **3100**. The method **3100** may include providing a first high frequency square wave current to a first drive winding wound on a first core (step **3102**). The method may also include providing a second high frequency square wave current to a second drive winding wound on a second core (step **3104**). The second high frequency square wave current may have an opposite polarity of the first high frequency square wave current. The method **3100** may then include sensing one or more pulses on a sense winding wound about the first and second cores (step **3106**). The one or more pulses may be created by a common mode current on one or more utility lines threaded through the first and second cores. The method **3100** may then include adjusting a current to a compensation winding wound about the first and second cores to cancel out the one or more pulses on the sense winding (step **3106**). The method **3100** may then include determining the common mode current on the one or more utility lines as the current on the compensation winding multiplied by a turn ratio between the compensation winding and the sense winding (step **3108**).

In some embodiments, a saturation flux density of the first core may be substantially equal to the saturation flux density of the second core. In other embodiments, a saturation flux density of the first core is within 10% of the saturation flux density of the second core. If the first core has a lower saturation flux density than the second core, then the first drive winding may be provided with less current than the second drive winding such that the first core saturates at substantially the same time as the second core. One or more peaks of a rising edge of the sensed one or more pulses may be measured by a first sample and hold circuit. One or more peaks of a falling edge of the sensed one or more pulses may be measured by a second sample and hold circuit. A difference in magnitude between an average of the peaks of the rising edges and an average of the peaks of the falling edges may be determined. At least one of: the first high frequency square wave current and the second high frequency square wave current may be adjusted based on the determined difference in magnitude, and the adjusted current may compensate for a difference in a saturation flux density between the first core and the second core. The common mode current in the utility line may be at least one of: an AC residual leakage current and a DC residual leakage current.

FIG. **32** depicts a flowchart of an exemplary ground monitor interrupter (GMI) method **3200**. The method **3200** may include providing a high frequency signal to one or more utility lines by a first drive winding (step **3202**). The method **3200** may also include measuring an amplitude of a current that results by the second drive winding (step **3204**). The amplitude of the current that results may be proportional to a reciprocal of a ground loop impedance. The high frequency signal driven by the first drive winding may flow to a utility ground, to an electric vehicle service equipment (EVSE) through a ground wire, to ground filter capacitors of the EVSE and to ground filter capacitors of an electric vehicle (EV), to the second core, and to the first core. If a resistance of the utility ground is too high or open, then no signal may be measured by the second core.

FIG. **33** depicts an exemplary system **3300** having residual current detecting (RCD) and ground monitor interrupter (GMI) to cut power between a utility **3302** and an electric vehicle (EV) **3304** if a fault is detected. The system may include an electric vehicle supply equipment (EVSE) **3306** to charge the EV **3304** with power provided by the utility **3302**. While this system is described with reference to an EVSE, it may be applied to other electrical systems requiring RCD and GMI capabilities, such as a wall socket

in a building. The EVSE may include a current sensing transformer **3308**. The transformer may include a first core; a first drive winding wound on the first core; a second core; a second drive winding wound on the second core; a sense winding wound across the first and second cores; and a compensation winding wound across the first and second cores. The first and second cores may be arranged substantially parallel to one another. A saturation flux density of the first core may be substantially equal to the saturation flux density of the second core. One or more utility lines **3314**, **3316**, depicted as solid lines and dashed lines in the EVSE **3306**, may be threaded through a middle of the first and second cores of the transformer **3308**.

In RCD mode, a microcontroller **3310** may drive the first drive winding with a first high frequency square wave current. The microcontroller **3310** may also drive the second drive winding with a second high frequency square wave current. The second high frequency square wave current may have an opposite polarity of the first high frequency square wave current. A common mode current, such as an AC residual leakage current and/or a DC residual leakage current, in the one or more utility lines **3314**, **3316** may cause one or more pulses to appear on the sense winding of the transformer **3308**. These pulses may be detected by the microcontroller **3310**. In response to the pulses, a current on the compensation winding of the transformer **3308** is adjusted by the microcontroller **3310** until the one or more pulses on the sense winding of the transformer **3308** are cancelled out. The microcontroller may determine the common mode current on the one or more utility lines **3314**, **3316** as the adjusted current on the compensation winding of the transformer **3308** multiplied by a turn ratio between the compensation winding and the sense winding of the transformer **3308**.

The microcontroller **3310** may determine if the common mode current exceeds a set threshold. The microcontroller **3310** may send a signal to a relay **3312** to cut power between the EVSE **3306** and/or the EV **3304** and the utility **3302** when the determined set threshold is exceeded. The threshold may be 6 mA for DC current and 20 mA for AC current. The thresholds may be varied based on the application and any laws set by regulatory agencies.

In GMI mode, the microcontroller **3310** may drive the first drive winding of the transformer **3308** with a high frequency signal to the one or more utility lines **3314**, **3316**. The second drive winding of the transformer **3308** may measure an amplitude of a current that results, which may be proportional to a reciprocal of a ground loop impedance, wherein the high frequency signal driven by the first drive winding flows to a utility ground, to the EVSE through a ground wire, to ground filter capacitors of the EVSE and to ground filter capacitors of an electric vehicle (EV), to the second core, and to the first core. No signal may be measured by the second core if a resistance of the utility ground is too high or open. A minimum threshold signal measured by the second core may be set to switch off power. In some embodiments, the minimum threshold signal may be 0.8 V, which may correspond to 150-300 ohm ground loop resistance. In other embodiments, the minimum threshold signal may be set to correspond to a ground loop resistance of 1500 ohm or more.

The EVSE **3306** may switch between RCD mode and GMI mode in order to test for both conditions. In some embodiments, the EVSE **3306** may switch to GMI mode four times per second for a maximum duration of 300 us. To test for correct operation of the RCD mode prior to closing the relay **3312**, the microcontroller **3310** may command a current source for the compensation winding to inject a test current. In other embodiments, a test button may included that connects a resistor between ground and line using a switch. The response time to cut power may be varied based on the application and any regulatory requirements. The response time may be a function of the leakage current magnitude. Power may be cut on leakage current in 1 ms and missing ground in 300 us. However, a quicker time to cut power may create unnecessary trips due to noise. While a microcontroller **3310** is depicted in the system **3300**, one or all of its functions may be replaced by analog and logic circuitry in some embodiments as disclosed herein. Likewise, additional microcontrollers may be used to accomplish different functions.

It is contemplated that various combinations and/or subcombinations of the specific features and aspects of the above embodiments may be made and still fall within the scope of the invention. Accordingly, it should be understood that various features and aspects of the disclosed embodiments may be combined with or substituted for one another in order to form varying modes of the disclosed invention. Further it is intended that the scope of the present invention is herein disclosed by way of examples and should not be limited by the particular disclosed embodiments described above.

What is claimed is:

1. A transformer comprising:

a first drive winding wound on a first core, wherein the first drive winding is driven with a first frequency current;

a second drive winding wound on a second core, wherein the second drive winding is driven with a second frequency current;

a sense winding wound across the first and second cores; and

a compensation winding wound across the first and second cores;

wherein one or more utility lines are disposed proximate to a middle of the first and second cores, wherein a common mode current in the one or more utility lines causes one or more pulses to appear on the sense winding, wherein a current on the compensation winding is adjusted until the one or more pulses on the sense winding are cancelled out.

2. The transformer of claim **1**, wherein a net flux through the sense winding is zero if no common mode current is present on the one or more utility lines.

3. The transformer of claim **1**, wherein a saturation flux density of the first core is substantially equal to the saturation flux density of the second core.

4. The transformer of claim **1**, wherein a saturation flux density of the first core is within 10% of the saturation flux density of the second core.

5. The transformer of claim **1**, wherein the first core has a lower saturation flux density than the second core, and wherein the first drive winding is driven with less current than the second drive winding such that the first core saturates at substantially the same time as the second core.

6. The transformer of claim **1**, wherein the first drive winding applies a high frequency signal to the one or more utility lines, wherein the second drive winding measures an amplitude of a current that results, and wherein the amplitude of the current that results is proportional to a reciprocal of a ground loop impedance.

7. The transformer of claim 1, wherein the common mode current in the one or more utility lines is at least one of: an AC residual leakage current and a DC residual leakage current.

8. The transformer of claim 1, wherein the first core is disposed substantially parallel to the second core.

9. A method comprising:

providing a first frequency current to a first drive winding wound on a first core;

providing a second frequency current to a second drive winding wound on a second core;

sensing one or more pulses on a sense winding wound about the first and second cores, wherein the one or more pulses are created by a common mode current on one or more utility lines disposed proximate to the first and second cores;

adjusting a current to a compensation winding wound about the first and second cores to cancel out the one or more pulses on the sense winding; and

determining the common mode current on the one or more utility lines.

10. The method of claim 9, wherein a saturation flux density of the first core is substantially equal to the saturation flux density of the second core.

11. The method of claim 10, wherein a saturation flux density of the first core is within 10% of the saturation flux density of the second core.

12. The method of claim 11, wherein the first core has a lower saturation flux density than the second core, and wherein the first drive winding is provided with less current than the second drive winding such that the first core saturates at substantially the same time as the second core.

13. The method of claim 11, further comprising:

measuring one or more peaks of a rising edge of the sensed one or more pulses by a first sample and hold circuit;

measuring one or more peaks of a falling edge of the sensed one or more pulses by a second sample and hold circuit;

determining a difference in magnitude between an average of the peaks of the rising edges and an average of the peaks of the falling edges; and

adjusting at least one of: a first high frequency square wave current and a second high frequency square wave current based on the determined difference in magnitude, wherein the adjusted current compensates for a difference in a saturation flux density between the first core and the second core.

14. The method of claim 9, further comprising:

providing a high frequency signal to the one or more utility lines by the first drive winding; and

measuring an amplitude of a current that results by the second drive winding, wherein the amplitude of the current that results is proportional to a reciprocal of a ground loop impedance.

15. The method of claim 14, wherein the high frequency signal driven by the first drive winding flows to a utility ground, to an electric vehicle service equipment (EVSE) through a ground wire, to ground filter capacitors of the EVSE and to ground filter capacitors of an electric vehicle (EV), to the second core, and to the first core.

16. The method of claim 15, wherein no signal is measured by the second core if a resistance of the utility ground is too high or open.

17. The method of claim 9, wherein the common mode current in the one or more utility lines is at least one of: an AC residual leakage current and a DC residual leakage current.

18. A system comprising:

a transformer comprising:

a first drive winding wound on a first core, wherein the first drive winding is driven with a first frequency current;

a second drive winding wound on a second core, wherein the second drive winding is driven with a second frequency current;

a sense winding wound across the first and second cores; and

a compensation winding wound across the first and second cores;

one or more utility lines, wherein the one or more utility lines are disposed proximate to a middle of the first and second cores, wherein a common mode current in the one or more utility lines causes one or more pulses to appear on the sense winding, wherein a current on the compensation winding is adjusted until the one or more pulses on the sense winding are cancelled out.

19. The system of claim 18 further comprising:

an electric vehicle supply equipment (EVSE), wherein the transformer and the one or more utility lines are part of the EVSE;

a relay, wherein the relay is part of the EVSE;

wherein the system determines if the common mode current exceeds a set threshold, wherein the system sends a signal to a relay to cut power between the EVSE and a utility when the determined set threshold is exceeded.

20. The system of claim 19, wherein the first drive winding applies a high frequency signal to the one or more utility lines, wherein the second drive winding measures an amplitude of a current that results, wherein the amplitude of the current that results is proportional to a reciprocal of a ground loop impedance, wherein the high frequency signal driven by the first drive winding flows to a utility ground, to the EVSE through a ground wire, to ground filter capacitors of the EVSE and to ground filter capacitors of an electric vehicle (EV), to the second core, and to the first core.

* * * * *