No. 611,777. Patented Oct. 4, 1898.

J. DES BRISAY.

POWER HOIST.

(Application filed Dec. 24, 1897.)

(No Model.) 2 Sheets—Sheet 1.

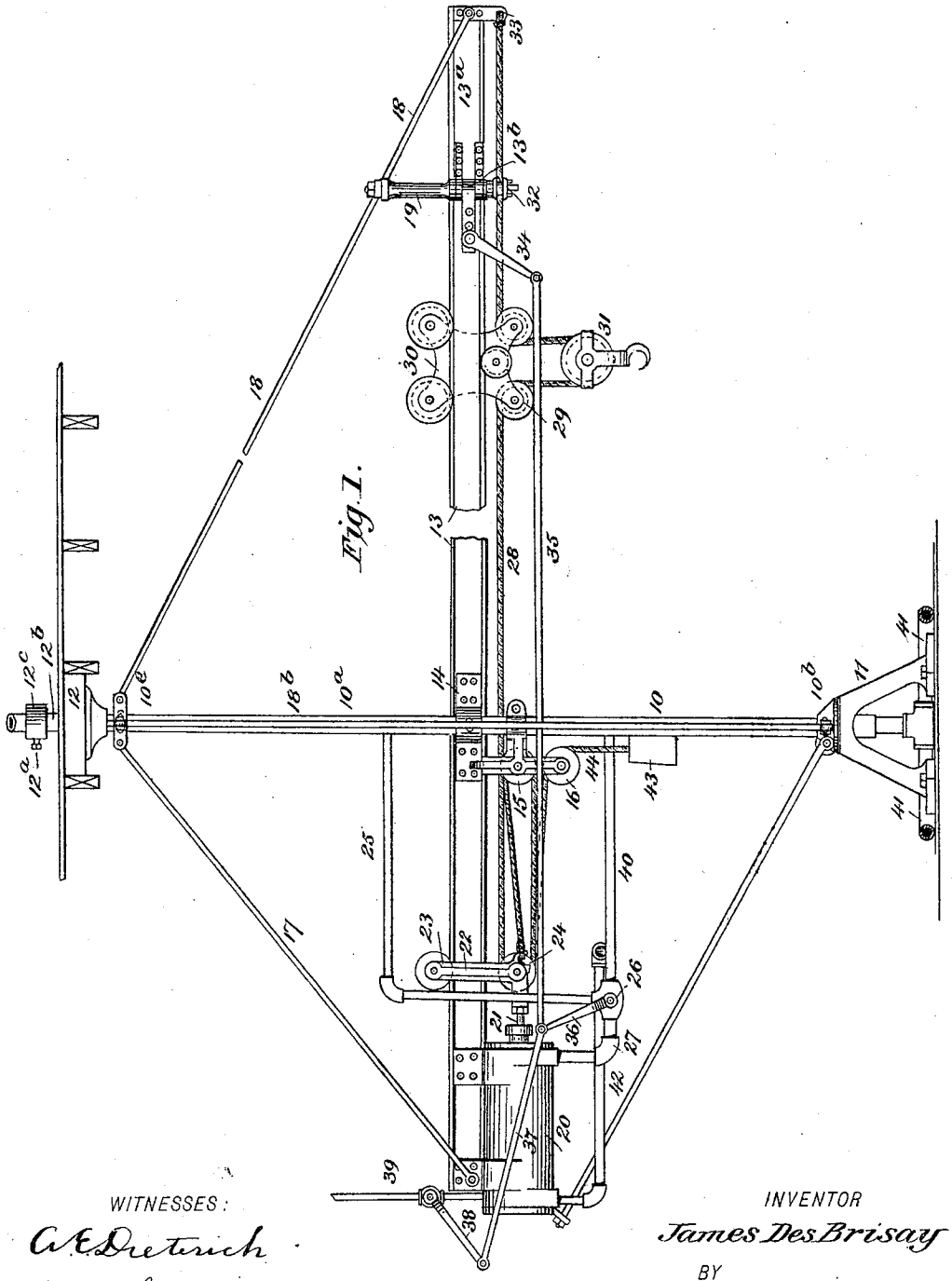

Fig. 1.

WITNESSES:
C. E. Dietrich
E. McCormic

INVENTOR
James Des Brisay
BY
Fred G. Dieterich
ATTORNEY

THE NORRIS PETERS CO., PHOTO-LITHO., WASHINGTON, D. C.

No. 611,777. Patented Oct. 4, 1898.

J. DES BRISAY.

POWER HOIST.

(Application filed Dec. 24, 1897.)

(No Model.) 2 Sheets—Sheet 2.

Fig. 2.

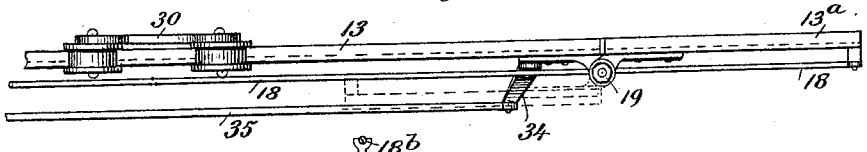

Fig. 3.

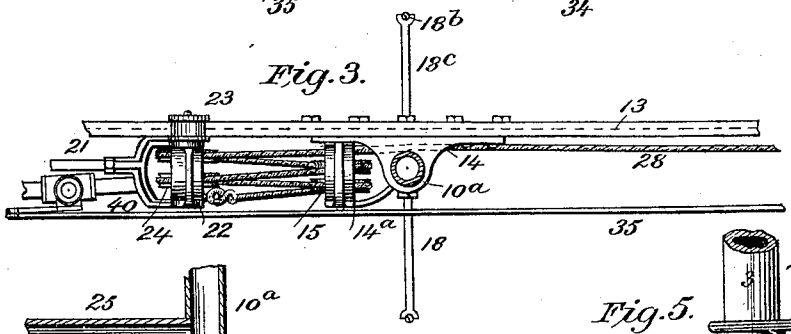

Fig. 4.

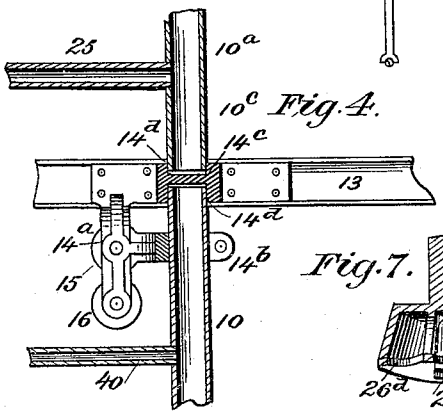

Fig. 5.

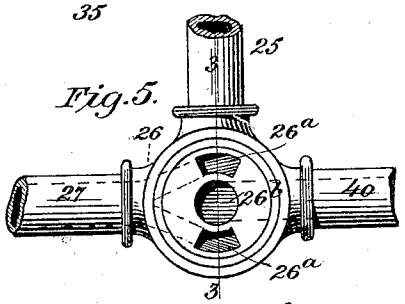

Fig. 7.

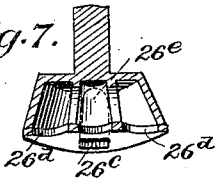

Fig. 6.

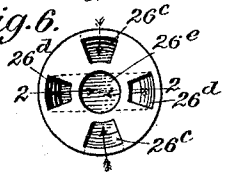

Fig. 8.

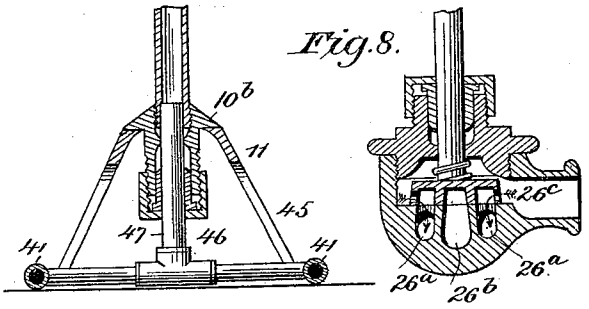

Fig. 9.

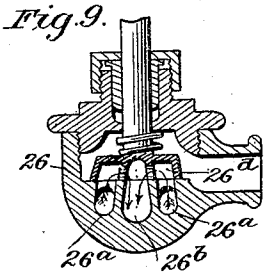

WITNESSES:

A. E. Dieterich

E. McCormic

INVENTOR

James Des Brisay.

BY

Fred G. Dieterich

ATTORNEY

THE NORRIS PETERS CO., PHOTO-LITHO., WASHINGTON, D. C.

UNITED STATES PATENT OFFICE.

JAMES DES BRISAY, OF NEW WESTMINSTER, CANADA.

POWER-HOIST.

SPECIFICATION forming part of Letters Patent No. 611,777, dated October 4, 1898.

Application filed December 24, 1897. Serial No. 663,337. (No model.)

To all whom it may concern:

Be it known that I, JAMES DES BRISAY, a citizen of the Dominion of Canada, residing at the city of New Westminster, in the Province of British Columbia, Canada, have invented a new and useful Power-Hoist, of which the following is a specification.

My invention has relation to improvements in that class of power-hoists where speed is required and where little space is available to operate therein and in which steam, compressed air, or water is utilized as the motive power. The drawings in this case, however, are intended to illustrate the application of water, as will be fully explained.

The object of this invention is to provide an apparatus that occupies but little floor-space by utilizing the supporting-column as the power-transmitter and that may be rapidly operated at any point within the radius of the swinging beam 13. Other advantages will be seen when this specification is taken in conjunction with the appended drawings, in which—

Figure 1 shows a side elevation of my hoist in position for operation. Fig. 2 is a detail plan of the projecting beam 13. Fig. 3 is also a detail plan view of the same, taken at the supporting-column 10^a. Fig. 4 is a vertical intersection of the same. Fig. 5 is a plan of the valve mechanism with the valve removed. Fig. 6 is an inverted plan of the valve-seat thereof. Fig. 7 is a vertical section of the said seat, taken at line 2 2 in Fig. 6. Fig. 8 is an intersection of the valve, taken on the line 3 3 in Fig. 5, showing the ports opened to connect with the pipe 27; and Fig. 9 is the same view with the ports in the valve reversed, connecting the pipe 27 with the waste-pipe 40.

In the said drawings, 10 and 10^a are two hollow cylindrical sections forming the vertical column upon which is attached the crane or beam 13 and forming the axis thereof. 11 represents the support of the said column, and the upper end thereof is suitably journaled in a block 12, secured to the upper floor, or it may be stayed in any other manner desired.

Lying at right angles to and in proximity to the junction of the sections 10 and 10^a is a cross arm or beam 13. This beam 13 is securely bolted to a hanger-bracket 14, and, as better shown in Fig. 4, the said bracket 14 forms a suitable coupling for the sections 10 and 10^a, the opening being hermetically stopped by the division in the said bracket, as 14^c, the reason for which will presently appear, and the said sections 10 and 10^a take into the thread in the bracket at 14^d. Depending from the said bracket 14 is a hanger 14^a, adapted to support a series of pulleys 15 and 16, and projecting laterally from the said dependency is a collar 14^b, which encircles and is securely bolted to the section 10 of the column. The beam 13 is stayed by rods 17 and 18, secured to their extreme opposite ends and to a collar 10^c at the top of the section 10^a. The rod 18 to the right, however, is divided into sections by a pillar 19, the object of which will appear later. Securely bolted to and supported by the opposite end of the beam 13 is a cylinder 20, having a piston and rod 21. This piston-rod is connected with and supported by a movable hanger 22, said hanger being supported by and depending from a grooved wheel 23, lying on the beam 13, which provides a track for the same. A second series of pulleys 24 are journaled in the lower portion of the said hanger similar to the pulleys 15. 25 indicates a pipe connecting with the section 10^a of the column and with the cylinder 20, and intermediately arranged is a valve 26, dividing the cylinder therefrom by the pipe 27, the reason of which will appear hereinafter. Connecting together the said series of pulleys 15 and 24 is a cable 28, which traverses the beam 13 and passes over other pulleys 29, suspended in a carriage 30, and the depending loop between the pulleys 29 takes round a sheave in a block 31 and passing on the said cable lies in close proximity to a spindle 32, which is secured on the depending end of the pillar 19, and a bracket 33 secures the end of the cable at the extreme end of the beam 13.

34 is a lever pivoted on the beam 13, and 35 is a connecting-rod which connects the said lever 34 with a like lever 36, and a second rod 37 has a similar connection with a rod 38, whose opposite end connects with a valve in a pipe 39.

40 indicates a waste or exhaust pipe con-

necting the valve 26 and the section 10 of the column, and, as shown in Fig. 4, the lower end of the said waste is exhibited by the vents 41, which are secured to a stationary pipe placed vertical and connecting with the lower end of the section 10.

To provide for any leakage through the piston and preventing it from making a full stroke by reason of the waste occupying the space in the opposite end of the cylinder, I provide a vent-pipe 42, which conducts all leakage to the above-mentioned waste-pipe 40.

To provide for the return of the piston-rod, and consequently the contraction of the space between the pulleys 15 and 24, I provide the weight 43, having a cable 44 attached taking over the sheave 16 and having its opposite end secured to the depending end of the movable hanger 22. This weight may be adjusted to the desired gravity to overcome the friction of the piston-rod and the movable hanger and to return the same for the next stroke.

When it is desirous to reduce the length of the beam 13 for working along the wall part of a room or for any other reason, the portion 13^a may be folded (see Fig. 2) by means of the hinge 13^b. This hinge 13^b is formed by three or more straps placed diametrically opposite and securely bolted to the sections 13 and 13^a. The depending shaft of the pillar 19 forms the hinge-pin, and when the said beam is folded by reason of the spindle 32 on the depending pin the cable 28 is normally kept tight.

As better shown in Fig. 4, the lower end of the section 10 has depending therefrom a stuffing-box, the parts being indicated by 45 and 46, and the portion 10^b, secured to the section 10, is provided with a projecting flange which rests around the rim of the support 11. This allows of the said column being swung round upon the support 11, and, by reason of the vertical pipe 47, which must be nicely cylindered and fitted, there is no leakage, but the water employed for power passes out through the pipe 41, as aforesaid.

It will be seen that the cylinder 20 is without provision for exhaust-valves, but the pipe 27 receives both the force from the pipe 25 and the waste from the cylinder 20 by return movement when the force of the stroke is spent, and this waste is received into the pipe 40, from where it escapes by gravity. Now since the cylinder 20 performs no function but the oscillation of the piston, and the escaping waste is received through the same pipe as is connected with the power supply, the work necessarily devolves upon the valve mechanism 26 that would naturally be performed by an exhaust-valve in the said cylinder 20.

In order to understand the working of the valve, (see Figs. 5 to 9, inclusive,) 26^a are the ports which lead to the pipe 27 and to the cylinder 20 and are shown in working position in Fig. 8. 26^b indicates the waste or exhaust ports, (shown working in Fig. 9,) and, as will be better understood in Figs. 5, 6, and 7, there is a positive and a negative connection between the cylinder 20 and the valve 26—that is, when the ports 26^c in the valve are brought over the ports 26^a in the seat the contact is made with the pipes 25 and 27, and when the ports 26^d in the valve are brought over the said ports 26^a in the seat the contact will be complete between the pipes 27 and 40, as shown in Fig. 9, but the ports 26^c from the pipe 25 will be over the blank part of the seat, as shown on opposite sides in Fig. 5, and consequently the contact is entirely shut off from the pipe 25.

In the operation of my hoist water, steam, or compressed air is received into the upper part of the section 10^a. This is conducted through the pipe 25, the valve 26, and the pipe 27 to the cylinder 20, and the piston therein will be forced to the rear end, and by reason of the cable 28 connecting the pulleys 15 and 24, which are journaled in the hangers 14^a and 22, the said cable will be hauled and poised between the pulleys, and consequently the depending block 31, to which is attached any desired weight, is drawn up, the beam 13 is swung to the desired place, and by a reverse movement of the lever 34 by the connecting-rod 35 the lever 36 is thrown backward and the power is shut off, and the escape-ports of the valve are opened, when the piston will return for a second stroke. At the same time that the escape-ports are opened a vent is opened in the opposite end of the cylinder through the pipe 39 by means of the connecting-rod 37 and the lever 38. This prevents a vacuum being formed in the cylinder, which would prevent the weight 43 from returning the piston. On the forward movement of the piston, however, all resisting bodies will be driven out of the cylinder through the waste-pipe 42, which connects with the pipe 40.

The carriage 30, which supports the depending block 31, may be moved along the beam 13, which is its track, to any point desired, either when loaded or not.

From the foregoing it is seen that my hoist is well adapted to perform the work for which it is designed, and owing to the power being concentrated within the machine-frame there are no depending portions in the way or leakage from pipes, nor is there any aptness for the hoisting-cable to become snarled; but the work is done neatly and conveniently, which is the main object I have in view.

Having thus described my invention, what I claim is—

1. In a power-hoist, the combination of a hollow column divided into two sections 10 and 10^a arranged upon a suitable support and stayed in a vertical position, of a bracket 14 rigidly connected to the said sections and forming a partition therebetween, a beam 13

placed in a horizontal position and rigidly secured to the bracket 14, guys 17 and 18 connecting the extreme opposite ends of the said beam with the top of the section 10^a, and a pipe connection between the section 10^a and the section 10, as and for the purposes set forth.

2. In a power-hoist having a column divided into two compartments, a beam secured at right angles to and at the division of the said compartments, a cylinder secured to one end of the said beam and a piston working therein, a hanger attached to the said piston having pulleys arranged therein, other pulleys arranged in a rigidly-fixed hanger 14^a and a cable connecting the said pulleys and the opposite end of the beam, a pipe 25 connecting the section 10^a of the column with a pipe 27 through a valve 26 to the said cylinder, and means for connecting the said pipe 27 with a waste or exhaust pipe 40, which connects with the section 10, the same having the waste-outlets 41, means of connecting and disconnecting the said pipe 25 with the pipe 27, and for connecting and disconnecting the pipes 27 and 40, so that the piston in the cylinder will be oscillated as set forth.

3. In a power-hoist having a hollow column arranged to turn on a support 11, a stuffing-box connecting the depending end of the said column with a rigidly-fixed vertical pipe 47 having the outlets 41, a bracket 14 secured to and arranged to divide the said column into two sections, a horizontal beam secured to the said bracket and guys to support said beam, a cylinder rigidly fixed to one end of the said beam having a piston therein, means for passing liquid or fluid to the said cylinder from the upper section of the column, whereby the piston will be driven backward, and means for passing the said liquid or fluid out through the column 10, whereby the said piston will be allowed to return, and means of connecting the said moving piston with a vertically-depending block 31 and a carriage 30 and the opposite end of the beam 13, so that the block 31 will be drawn up and down, as and for the purposes set forth.

4. In a power-hoist, the combination of a hollow vertical column arranged to turn on a suitable support, a beam secured to the said column and arranged to carry a carriage on one end thereof, a steam or water cylinder secured to the opposite end of the said beam, a piston in said cylinder connecting with the carriage on the beam through a series of pulleys arranged intermediately between the piston and the said carriage, a pipe connecting with the cylinder from the upper part of the column, a partition in the said column below such connection, a pipe connecting from the cylinder to the lower part of the column below the partition therein, and a valve arranged at the junction of the pipes 25, 27 and 40, whereby the water or fluid may be passed into the cylinder from the supply-reservoir 10^a, or from the cylinder to the waste or exhaust pipe 40, as set forth.

5. In a power-hoist having a vertical column arranged to turn upon suitable bearings and a horizontal carriage-beam secured thereto, the said beam being divided into two parts, a hinge connecting the said two parts together, a pillar extending above and below the joint of the hinge, the upper portion being pivotally connected to a rod which connects with the top of the said column and also connected by a second rod with the extreme end of one of the sections of the beam, a spindle on the depending end of the pillar, beneath the hinge, the said spindle being in alinement with a depending bracket on the extreme end of the movable section of the beam and pulley mechanism on a carriage supported by the same, so that when the hinged portion of the beam is swung forward the slack of the cable, which would otherwise appear, between the said depending bracket and the pulley mechanism will be received upon and held tight by the said spindle, as set forth.

6. A power-hoist, comprising a hollow vertical supporting-column forming a lead for compressed air, water or steam; a beam held on such column, a power-cylinder carried on the beam, a valve laterally joining said cylinder with the hollow column, means for exhausting the said cylinder, a carriage held to travel on the beam, a lift supported by the carriage, connections joining the lift with the piston in the operating-cylinder arranged substantially as shown, whereby the lift is elevated on one movement of the piston, and such piston moved in an opposite direction by the gravity of the lift devices, and means for shifting the valve of the feed and exhaust devices, all being arranged substantially as shown and for the purposes described.

7. In a hoist substantially as shown and described, a supporting-beam having a hinged section and a guide-spindle at the hinge-point, in combination with the lift devices, said lift devices including the operating-cable 28, one end of which is fixedly joined to the outer end of the hinged section of the beam and passed over the hinge-spindle member, substantially as shown and for the purposes described.

8. In a power-hoist, the combination with the tubular standard-sections 10 and 10^a, the beam 13, the cylinder 20, the piston and lift devices connected with and operated by the piston, of the inlet-pipe 25, connected with the upper tubular section 10, the exhaust 40, connected with the lower tubular section 10, said pipes 25 and 40, having a common connection 25 opening into one end of the cylinder, a double-acting valve mechanism for the pipes 25 and 40 arranged when shifted in

one direction to close off the pipe 40 and open up communication with the pipe 25, the cylinder when turned to the other direction to close up pipe 25 and open up communication with the cylinder and the pipe 40, a supplemental exhaust 42, connecting the opposite end of the cylinder with the pipe 40, all being arranged substantially as shown and described.

JAMES DES BRISAY.

Witnesses:
W. G. TRETHEWEY,
L. G. MUNN.