Feb. 5, 1946. H. F. BARR 2,394,354

HYDRAULIC LASH ADJUSTER

Filed March 10, 1943

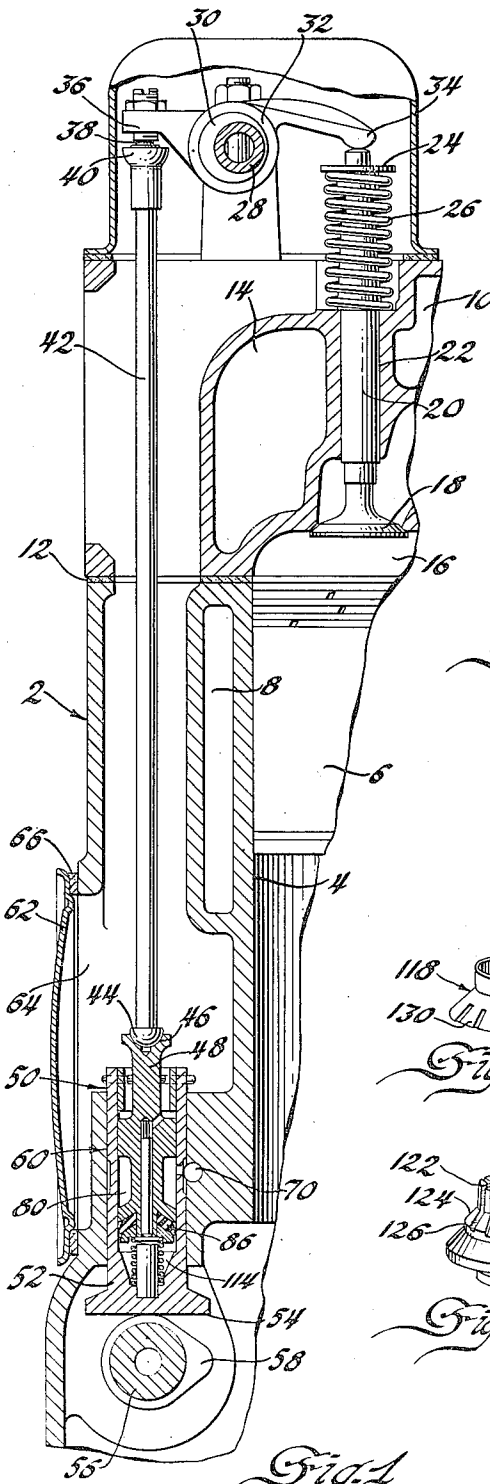

Fig. 1

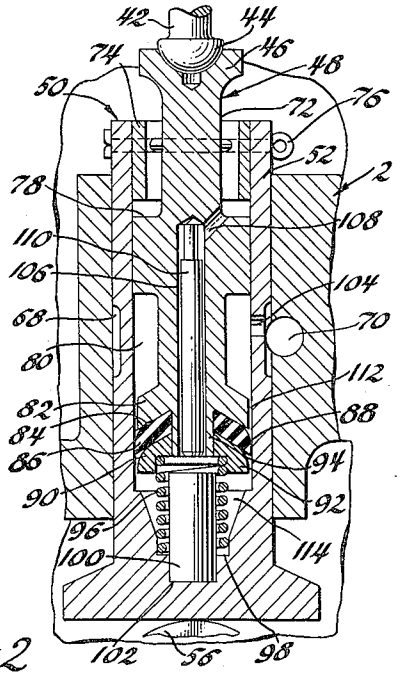

Fig. 2



Fig. 4

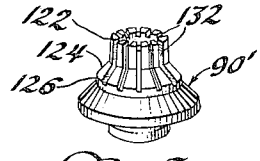

Fig. 5

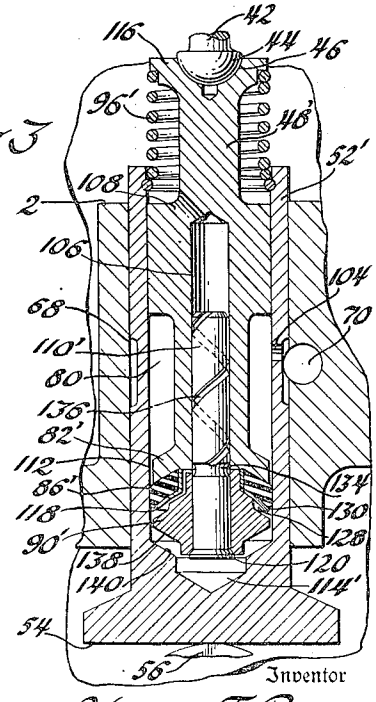

Fig. 3

Inventor

Harry F. Barr

By Blackwood, Spencer & Fleet

Attorneys

Patented Feb. 5, 1946

2,394,354

UNITED STATES PATENT OFFICE

2,394,354

HYDRAULIC LASH ADJUSTER

Harry F. Barr, Detroit, Mich., assignor to General Motors Corporation, Detroit, Mich., a corporation of Delaware

Application March 10, 1943, Serial No. 478,671

2 Claims. (Cl. 123—90)

This invention relates to internal combustion engines and has particular reference to a hydraulic means to adjust the play or lash in the valve mechanism.

The novelty of the structure relates to specific details of construction; in the application of oil pressure below a plunger of the tappet construction; and enabling a constant and very gradual escape of oil from under the plunger to relieve the pressure when excessive pressures tend to exist because of (1) the expansion of the parts due to heat, or (2) the upward movement of the tappet to unseat the usual poppet valve. The plunger of the tappet is preferably provided with an inclined non-metallic washer, preferably made of a substance known commercially as neoprene. The purpose of the inclined washer is to enable a seepage of oil in one direction, but to prevent the passage of oil in a reverse direction because the pressure of the oil will force the washer against the interior of the tappet cylinder.

On the drawing:

Figure 1 is a sectional view through a multi-cylinder internal combustion engine showing the application of the invention.

Figure 2 is an enlarged detailed sectional view of the structure of the invention shown in Figure 1.

Figure 3 is a sectional view similar to Figure 2 of a modification.

Figure 4 is a detailed perspective view of the spacer shown in Figure 3.

Figure 5 is a detailed perspective view of the retainer of Figure 3.

Referring to the drawing, the numeral 2 indicates an internal combustion engine as a whole. The engine has the usual cylinder block provided with a plurality of cylinders 4 in which operate the usual pistons 6 connected in the usual way by means of a connecting rod (not shown) to the usual crankshaft (not shown). The cylinder block has the usual water passages 8, and on top thereof there is the usual cylinder head 10 bolted to the cylinder block in the usual way. A gasket 12 is interpositioned between the cylinder block and the head 10. The head 10 has the usual water passages 14 and the usual combustion chamber 16. One of the poppet valves is shown at 18 and the bearing part 20 of the valve operates in a bearing seat 22 formed in the head. The valve stem has the retainer 24 secured on the end thereof and a compressed coil spring 26 is positioned between the retainer and a shoulder in the cylinder head.

The rocker arm shaft is indicated at 28 and on the shaft there are mounted a plurality of eccentric bearings 30 on each of which there is mounted a rocker arm 32. One end 34 of the rocker arm bears on the end of the stem of the valve 18 to operate it, and the other arm 36 has mounted therein a ball shaped terminal 38 which rests on a corresponding seat 40 secured to the end of a push rod 42. The lower end of the push rod is formed into ball shape as indicated at 44 and the ball 44 rests in a seat 46 formed in the end of a plunger 48 of the novel tappet construction indicated as a whole at 50. The tappet construction 50 includes the tappet body 52 which has a flat lower surface 54 in contact with the camshaft 56 and is operated by the cam 58. The tappet body 52 is slidably mounted in a bearing seat 60 formed in the engine block.

A removable cover plate 62 is provided over an opening 64 in the side of the engine block and a gasket 66 is interpositioned between the cover 62 and the edge of the opening 64. The opening 64 is to enable access to the tappets 50.

Referring to Figure 2, it will be seen that the plunger 48 slidably operates in the tappet body 52. The tappet body is cylindrical and has the exterior annular recess 68 which is adapted to receive oil pressure from an oil line 70. The plunger 48 has a reduced upper end 72 and the top of the tappet body 52 is provided with an interior collar 74 held in place by a cotter pin 76. The collar 74 forms an abutment for the shoulder 78 of the plunger and limits the upward movement of the plunger.

The plunger is provided with an annular recess 80 which is much longer than the recess 68 but more or less parallels this recess 68. The recess 80 extends well toward the bottom of the plunger so that the lower portion of the plunger is formed in a flange-like structure 82. This flange is undercut to give an inclined surface 84 and against the inclined surface there is received a correspondingly shaped washer 86 which has a sharpened lower outer periphery 88 which presses against the inner cylindrical wall of the bore of the tappet body 52. This washer 86 may be made of any desirable material, but in the present invention is preferably made from a plastic substance known commercially as neoprene. Below the washer 86 there is positioned the retainer 90, the upper part of which is shaped to conform to the shape of the flange 82 and the washer 86, but has a rounded periphery as indicated at 92, spaced from the wall of the tappet body 52.

The plunger 48 has a projection or extension 94 at its lower end, and over this projection or

extension there are received the washer 86 and the retainer 90.

The retainer 90 has a recess on its underside and in the recess there is received the upper end of a coil spring 96 which is under compression and which rests at its lower end in a seat 98 in the bottom of the hollow tappet body 52. The spring surrounds a cylindrical block 100, the lower end of which is positioned in a recess 102 formed in the bottom of the tappet body. The block 100 limits the lower movement of the plunger and diminishes the size of the oil chamber 114 below the plunger. The coil spring 96 constantly urges the retainer 90 and the washer 86 upward or against the plunger 48.

The wall of the tappet body has an opening 104 which connects the recess 68 of the tappet body with the recess 80 of the plunger in order that oil pressure coming from the line 70 may pass into the recess 80.

The plunger 48 has a bore 106 and a lateral passage 108 connecting the bore 106 to the outside. In the bore 106 there is positioned a pin 110 to restrict the opening. The bore 106 serves as an oil escape passage, and the size of the pin 110 will determine the cross sectional area of the passage available as an escape opening.

The operation of the device is as follows: It is to be assumed that the entire space comprising the recesses 68 and 80 and the chamber 114 is already filled with oil. The oil pressure from the line 70 will pass through the opening 104 and into the recess 80, and owing to the inclined position of the washer 86 and the clearance space 112 between the flange 82 and the inner wall of the tappet body 52, the oil under pressure will force its way through the space 112 and between the edge of the washer 86 and the tappet body into the space 114 below the plunger and below the retainer 90. When the cam strikes the flat 54 on the end of the tappet body 52, the tappet body will be raised which will raise the plunger 48 because the chamber 114 is filled with oil under pressure. The oil pressure in the chamber 114 will constantly urge the plunger 48 upwardly which will prevent any play or lash at the joints.

When the valve tappet body 52 is lifted by the cam 58, the pressure exerted on the oil in the space 114 will increase, and in order to allow for a metered escape of oil under conditions of high pressure, the bore 106 is provided. With this high oil pressure in the space 114, the oil will be forced up the passage 106 and out of the passage 108 at a controlled rate, thus compensating for the expansion of the valve train parts caused by changes in temperature. Should the pressure in the chamber 114 be reduced below the value of the pressure at the oil line 70, such as when the cam 58 leaves the surface 54 of the tappet body, the pressure of the oil in the recess 80 will cause the oil to be forced past the washer and into the space 114 below the plunger 48, filling said space and thus compensating for the contraction of the valve train parts caused by changes in temperature or the loss of oil from space 114 during the valve lift event noted above. The block 100 has the advantage of forming a limiting stop for the lower movement of the plunger and decreasing the oil volume in the space 114 which increases the compression ratio and operating efficiency of the unit in scavenging air.

In Figure 3 similar parts are designated by the same numeral, or where there is a slight difference in the construction, a primed numeral has been used. The spring 96', instead of being positioned in the bottom of the tappet body 52, is positioned at the top between the end of the tappet body 52' and a shoulder 116 on the end of the plunger 48'. The neoprene washer 86' is shaped differently in that the sharp edge 88 is not used. The retainer 90' also has a different shape and is best shown in detail in Figure 5, and between the retainer 90' and the washer 86' a spacer 118 is positioned. This spacer is shown in detail in Figure 4.

In the species of Figure 3 there is no extension 94 on the end of the plunger, and the pin 110' is rigidly secured in the bore 106 and extends below the end of the plunger. The pin has a beveled end head 120 which serves as a seat for the retainer 90' which is received around the pin 110'.

The retainer 90' has a dome 122 and an inclined shoulder 124 below the dome. The shoulder terminates at 126 to leave a space 128 between the spring fingers 130 of the spacer and the retainer 90'. The dome 122 and shoulder 124 are provided with a plurality of small grooves 132 which serve as passages for the oil from the chamber 114' under the piston. The oil from the grooves 122 passes into an annular groove 134 formed in the pin 110' and from the groove 134 the oil passes into the spiral groove 136 to the top of the pin from where it leaves the plunger and bore 106 through the passage 108.

The spacer 118 has the collar 137, the top of which projects a little beyond the top of the dome 122 in the assembly shown in Figure 3.

The retainer has the lower inclined surface 138 which is adapted to seat on a correspondingly inclined surface 140 formed in the bottom of the tappet body 52'. The surfaces 138 and 140 serve as a limit stop for the downward movement of the plunger 48'.

The operation of the device is essentially the same as that described in connection with the species of Figure 2. The oil enters the recess 68 and passes into the recess 80 through the opening 104. The oil will then seep past the clearance 112 and between the edge of the washer 86' and that wall of the tappet body 52', into the chamber 114' below the plunger and the retainer. Due to high oil pressures during the valve lift interval, the oil will be forced through the grooves 132 into the recess 114' to the outside of the plunger through the spiral passage 136, the bore 106, and the passage 108. The oil pressure being constantly applied from the line 70 will feed oil as is necessary into the chamber 114' and the quantity of the oil in the chamber will be determined by the position of the plunger as varied by the degree of expansion and contraction of the parts. When the cam 58 forces the tappet body upward, the pressure in the chamber 114' increases, and this increased pressure will force oil through the grooves 132 to the outside of the tappet body and plunger allowing a slight contraction of the overall length of the tappet assembly during this cycle. Should the position of the parts be such that additional oil is needed in the chamber 114', when the valve is again seated the pressure from the line 70 will force the necessary quantity of oil past the neoprene washer 86'.

When high pressures are present in the chambers 114, 114', the oil cannot be forced in the reverse direction because the pressure against the washer will force it more tightly against the inner walls of the tappet body to prevent oil passing from the chambers 114 or 114' to the recess 80.

I claim:

1. In a hydraulic lash adjuster for the poppet

valves of an internal combustion engine, a hollow tappet body adapted to be actuated by the camshaft of the engine, a plunger reciprocably mounted in said body and interconnected with one of the valves to operate the same, said plunger having an annular recess, a resilient washer in the body below the plunger and seated thereagainst, said washer forming an oil seal between the plunger and the inner wall of the body, a retainer in the body seated under the washer, means on the end of the plunger to mount the washer and the retainer, means to enable oil to exert pressure in the recess, the plunger and the washer enabling oil to pass from the recess to underneath the plunger to cause oil pressure to be exerted underneath the plunger, a washer between the retainer and the seal, a plurality of grooves in the retainer to allow the passage of oil, and means in the plunger to receive oil from the said grooves and to enable the gradual escape of oil from underneath the plunger when high oil pressures exist below the plunger.

2. In a hydraulic lash adjuster for the poppet valves of an internal combustion engine, a hollow tappet body adapted to be actuated by the camshaft of the engine, a plunger reciprocably mounted in said body and interconnected with the valve to operate the same, said plunger having an annular recess, a resilient washer in the body below the plunger and seated thereagainst, said washer forming an oil seal between the plunger and the inner wall of the body, a retainer in the body seated under the washer, means on the end of the plunger to mount the washer and the retainer, means to enable oil to exert pressure in the recess, the plunger and the washer enabling oil to pass from the recess to underneath the plunger to cause oil pressure to be exerted underneath the plunger, a washer between the retainer and the seal, a plurality of grooves in the retainer to allow the passage of oil, a bore in the plunger, a rod in said bore, and a passage in the rod to receive oil from the said grooves and to enable the gradual escape of oil from underneath the plunger when high oil pressures exist below the plunger.

HARRY F. BARR.