B. JONAS.

GALVANIC CELL.

APPLICATION FILED APR. 2, 1904.

913,898.

Patented Mar. 2, 1909.

3 SHEETS—SHEET 1.

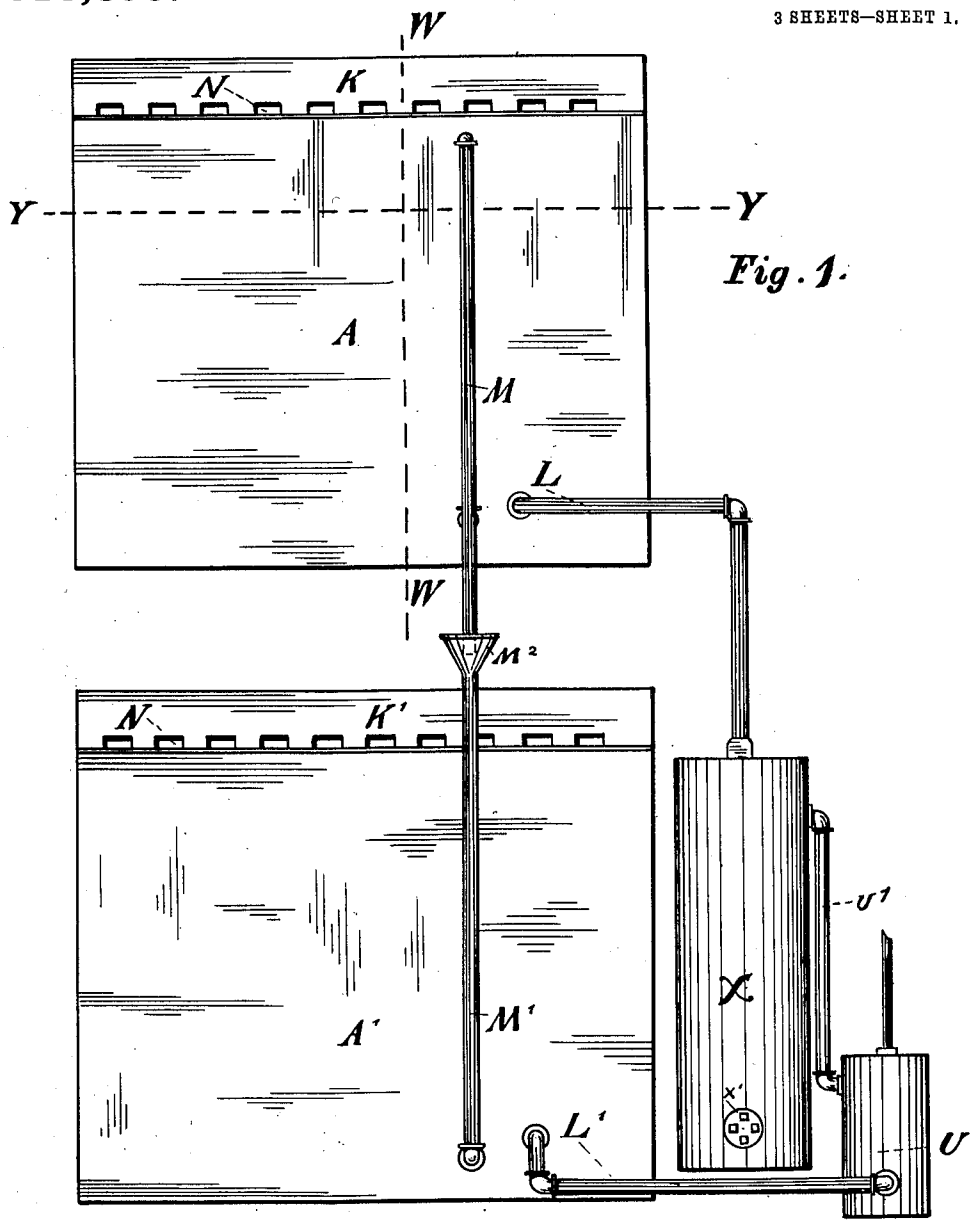

Fig. 1.

WITNESSES:

C. J. Clouse

INVENTOR

Baruch Jonas

BY Joseph N. Clouse

ATTORNEY

B. JONAS.

GALVANIC CELL.

APPLICATION FILED APR. 2, 1904.

913,898. Patented Mar. 2, 1909.

3 SHEETS—SHEET 2.

Fig. 2.

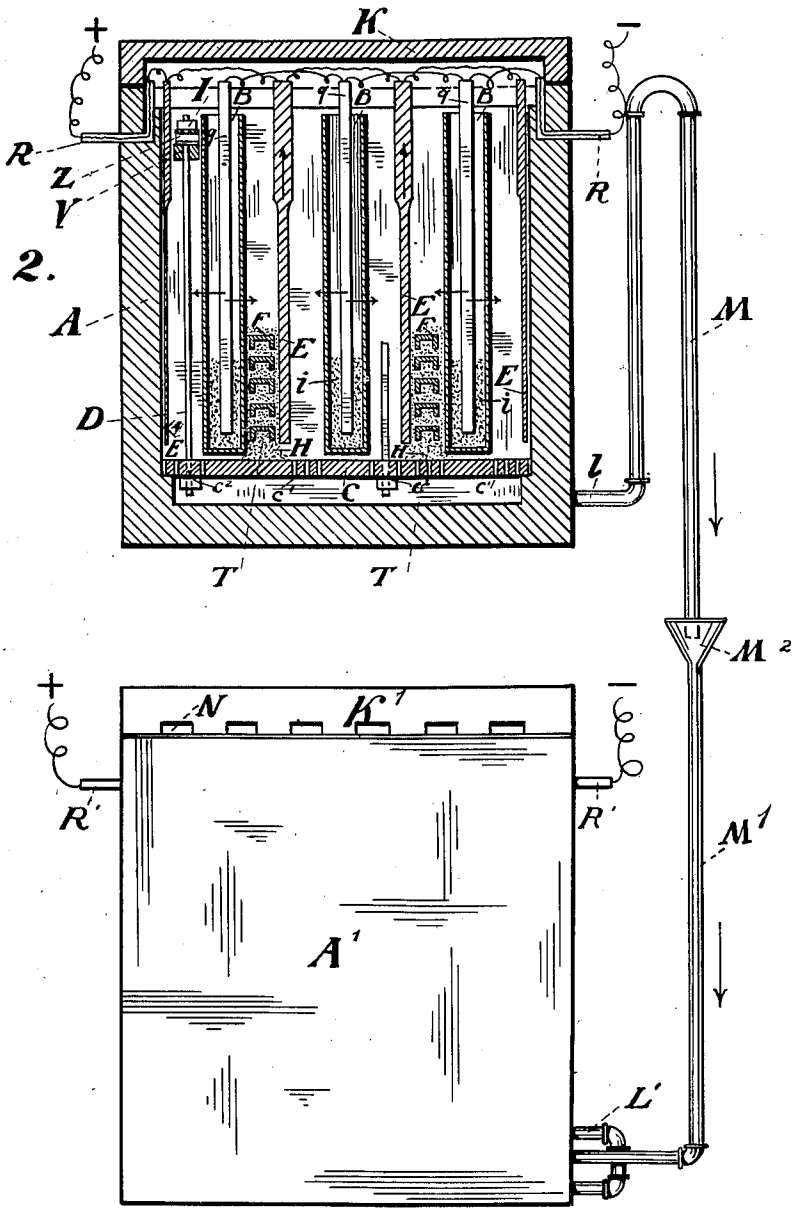

WITNESSES:

C. J. Clouse

INVENTOR

Barouch Jonas

BY Joseph N. Clouse

ATTORNEY

B. JONAS.

GALVANIC CELL.

APPLICATION FILED APR. 2, 1904.

913,898. Patented Mar. 2, 1909.

3 SHEETS—SHEET 3.

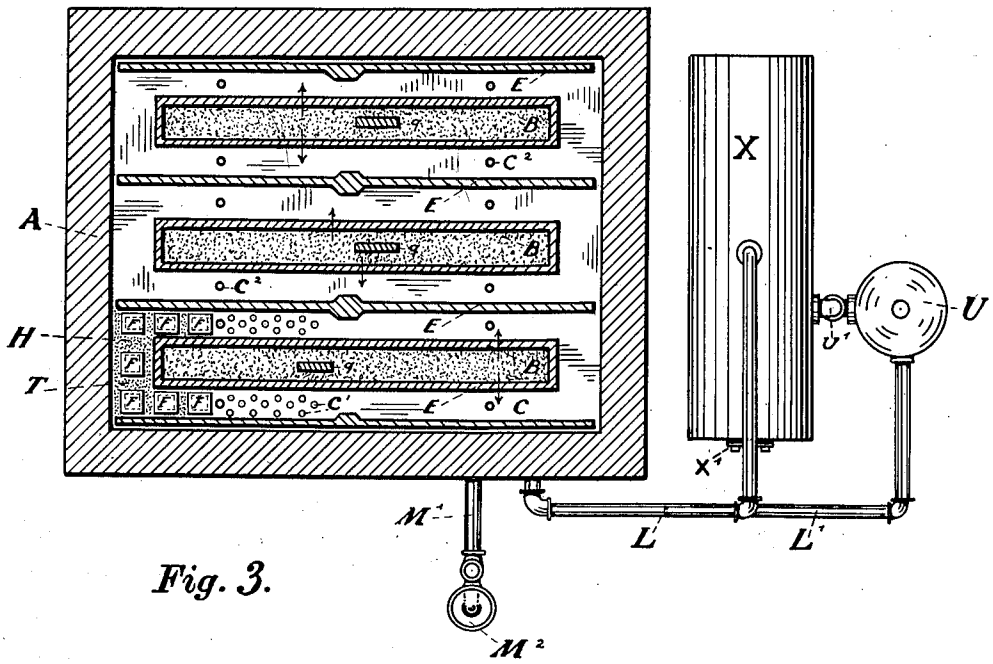

Fig. 3.

Fig. 4.

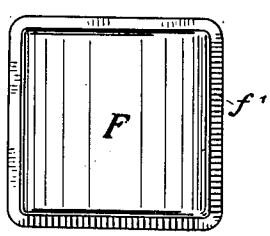

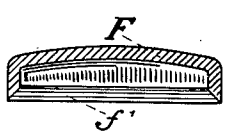

Fig. 5.

Fig. 6.

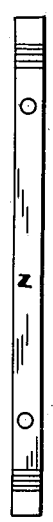

Fig. 7.

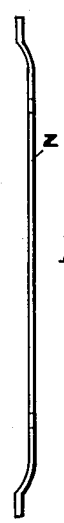

WITNESSES:

Carl Sauppe

C. J. Clouse

INVENTOR

Baronah Jonas

BY Joseph N. Clouse

ATTORNEY

UNITED STATES PATENT OFFICE.

BAROUKH JONAS, OF TOLEDO, OHIO, ASSIGNOR, BY MESNE ASSIGNMENTS, TO THE JONAS BATTERY COMPANY, OF TOLEDO, OHIO, A CORPORATION OF OHIO.

GALVANIC CELL.

No. 913,898. Specification of Letters Patent. Patented March 2, 1909.

Application filed April 2, 1904. Serial No. 201,355.

To all whom it may concern:

Be it known that I, BAROUKH JONAS, a citizen of Constantinople, Turkey, residing at Toledo, in the county of Lucas and State of Ohio, have invented certain new and useful Improvements in Galvanic Cells; and I do declare the following to be a full, clear, and exact description of the invention, such as will enable others skilled in the art to which it appertains to make and use the same, reference being had to the accompanying drawings, and to the letters and figures of reference marked thereon, which form a part of this specification.

My invention relates to improvements in galvanic cells, and the objects of my improvements are, first, to provide a constantly renewing and continuously acting galvanic cell that generates the electricity and delivers it into storage. Second, to provide a cheaper system of generating electricity, of such a construction that when once properly set up will continue to generate electricity for many months or as long as the supply of generating material lasts. Third, to increase the generating power of the cell or cells by a breathing system which is after the manner of inhaling and exhaling the air in the cells. I attain these objects by the mechanism illustrated in the accompanying drawings, in which—

Figure 1 is a front elevation of my invention complete. Fig. 2 is an end elevation of my invention complete except that the left hand portion of the upper cell is removed being cut on the vertical plane W. W., Fig. 1. Fig. 3 is a horizontal section taken on the plane Y. Y. on Fig. 1, removing the upper portion. Figs. 4 and 5 are respectively the under side and a section of one of the carbon cups enlarged. Figs. 6 and 7 are enlarged face and edge views of one of the pressure springs.

Similar letters and figures refer to similar parts throughout the several views.

Referring to the drawings, the tank or receptacle A. may be made of wood, earthenware or concrete. These shown are preferably of concrete so that all of the tubes and pipes can be cemented or built in them solid. It is provided with a lid or cover K., the under edge of which is provided all around with a series of openings N. which give a circulation for the air under the cover; near the bottom of the tank inside, a ledge is formed in the concrete on which the bottom planks C rest. These planks are perforated with many small holes c^1, and large holes for bolts c^2. On these bottom planks C are arranged systematically the various parts of my cell filling, a series of insulated bolts D, only one being shown entirely to avoid crowding the view of other parts arranged on the bottom planks. In this size there are three porous jars, B. B. B., of rectangular form, between which and against each side of the tank are placed in a vertical position 4 plates of carbon E. E. E. E.

In each of the porous jars is suspended a silver strip *g*. The lower portion of the porous jars are filled with small pieces *i* of iron that have been first cleaned by acid; then a heavy layer of granulated carbon H. is strewn evenly all over the bottom planks C. covering all of the space between the porous jars and the carbon plates and on this is placed a layer of carbon cups F. in an inverted position as shown in Fig. 2, filling in again around and over them with a layer of granulated carbon, thus alternating with the layers of cups and carbon to near the top of the porous jars, or up to the line of the wooden beams V. Then the series of wooden beams V., six in number (one in each space) are placed on the bolts D, and the pressure springs Z placed on them and the nuts I put on and screwed down so as to give a good solid pressure on the mass of carbon and cups between the bottom planks C and the wooden beams V. The silver strips *g*. *g*. *g*. are all connected by wire at the top of the tank above the solution line, which wire continues out through the tube R and forms the negative pole or terminal of the cell. Then again the carbon plates E. E. E. E. extend up into the top of the tank above the solution line and are connected together by wire, which wire continues out through the left hand tube R. and forms the positive pole of the cell. All of the tubes and pipes are built in solid in the concrete so as to be water tight. A solution is then filled in onto the granulated carbon until it rises to the solution line just above the tops of the porous jars so as to fill the jars also and flooding the entire tank up to this line with the solution. This solution, ferrous chlorid $FeCl_2$, which is obtained by the dissolving of iron in hydrochloric acid, serves as an electrolyte. Now at this point I will say that the electrical gener-

ating process begins in this upper tank A, Fig. 1, but next I will arrange the tanks and the system of circulation, for convenience in this system, one above the other as shown in Fig. 2, A above and A^1 below. A pipe *l* is connected to the tank A. at its bottom. This pipe extends up outside of the tank and terminates in a return bend which will overflow at the upper overflow line in the tank. From this return bend the pipe M. extends down and terminates inside of a funnel M^2 on the upper end of the pipe M^1 which enters the lower tank A^1 at its bottom. Another pipe L^1 connects with this lower tank below and extends to a connection with a pump U (the construction of which is not a part of this patent) and from said pump a pipe U^1 connects with a separating tank X, from which a pipe L extends into the bottom of the tank A., thus completing the circuit of the solution from the upper tank or cell into the lower tank or cell, and then through the pump U into the settling tank X. and from the settling tank X back into the upper tank or cell A. The lower tank or cell is filled and arranged in the same manner in every respect as the upper one just described.

In packing the cells there are a vast number of air spaces left under the inverted carbon cups F. in which the air is imprisoned when the interior of the tank is flooded with the solution. The manner of the circulation of the solution through the cells and their connecting pipes, pump and settling tank is as follows: The upper cell A having been filled with the solution up to its overflow line in the top of the cell, the solution begins to siphon over the return bend and run down through the pipe M. into the pipe M^2 and enter the lower cell A^1 at its bottom. There being no solution in the cell, it continues to fill until the upper cell is drained and the lower cell is full up to the overflow line above, then the pump U is put into action and draws the solution from the lower cell through the pipe L^1 and forces it into the settling tank X, where the particles held in suspension are precipitated by the more quiet state of the solution, to the bottom of the tank and may be removed in course of time and accumulation through the hand hole under the cover x^1. The continued pumping forces the solution through the pipe L into the upper tank again, until it is filled again to its overflow line, when the pump action stops and the siphon action begins and repeats the operation. This alternate emptying and filling of the cells with the solution, causes an alternate emptying and filling of the cells with air which each time causes fresh air to be imprisoned under the inverted carbon cups F., these alternate fillings of air and solution produces an inhaling and exhaling, or breathing action. In this system of filling and emptying, the upper cell empties rapidly and fills the lower cell rapidly, while in turn the lower cell empties slowly and fills the upper one slowly.

Having described the general construction of the parts of the cells and their relation to each other, together with the circulating process and its additional parts which produce the desired result of a breathing process, and a means of removing the exhausted or waste residue, I will next describe the electrolytic process of the cell complete.

The alternate filling and emptying of the cell causes the air to be drawn into the cell and imprisoned in the carbon element. The air thus imprisoned acting on the ferrous chlorid converts the same partially into ferric chlorid. The finely divided iron element reduces the ferric chlorid to ferrous chlorid, and at the same time a current is produced. It should be understood that this statement of the electrolytic action of a cell, having electrodes of iron and carbon and an electrolyte of iron salt, is a matter of theory and not altogether free from doubt. I do not, therefore, wish to be understood as limiting my claims by the theory here stated, for the invention remains the same regardless of the true explanation of the phenomena involved.

Not only are the particles situated in the cavity of the cup F. active, but all of the particles of carbon are active, for all are alternatively surrounded by the electrolyte and the air on account of the continual movement of the liquid in the cell.

The electrolyte is not exhausted because for each equivalent of chlorid of iron which is decomposed on account of the electrochemical action, another equivalent is formed on the negative electrode. The cell attains its maximum force when the interior temperature of the cell is about 56° centigrade or 132° Fahrenheit. The oxidized iron that is formed on the carbon is afterward carried away by the continual movement of the liquid, thus preventing any obstruction in the cell, it being carried into the settling tank X, and deposited there as a residue from the cells, and as the motion of the liquid in this tank is very slow it does not hold the particles in suspension and they fall to the bottom and may be removed through the hand hole under the plate x^1.

The construction of the negative electrode which is composed of superposed layers of granulated carbon H, inverted carbon cups F, and carbon plates E., is intended to give a large surface and a great conductibility at the same time. The current proceeding from any particle T., instead of spreading from particle to particle through a great number of contacts, has only to cross the piece F. and the nearest vertical plate E., of which the prolongation of E^1 serves as positive terminal, and the current ascends in it.

The same action taking place throughout the great amount of granulated carbon and inverted carbon cups and the exposure of surface in the vertical carbon plates makes a powerful generating force, which is also very greatly aided by washing and renewing of the granulated carbon surfaces by the solution and the renewed fresh air brought in contact with them by the breathing process. The arrows shown in the drawings indicate the direction of currents.

I do not design to confine myself in the construction of my cells to any particular shape of a tank or any particular shape or size of carbon plates, or any size or style of carbon cups or porous jars, as I can vary all of these shapes, sizes and numbers and accomplish the same purposes and result.

The waste and consumption in this construction of a cell is practically only the evaporation of the solution and the oxidizing of the iron, which is slow.

I have carefully described the construction, parts and working of my invention, and shown the results obtained, setting forth its objects and advantages, and where a great amount of energy is required, the couplet of cells are increased to any desired number.

What I claim as new and desire to secure by Letters Patent is:

1. In a galvanic cell, the combination of the tank or outer receptacle of concrete, provided with a ventilated cover, and internally fitted with a perforated bottom with a series of vertical bolts extending up through cross beams and springs, and held down by nuts onto a carbon filling, and between these bolts and beams a series of porous jars provided with a partial filling of iron particles and a silvered ribbon suspended therein, said jars alternating with carbon plates packed in close with a filling of granulated carbon and inverted carbon cups, all submerged with an electrolyte solution, composed of chlorid of iron dissolved in water; the said silvered ribbons all connected by wire forming a negative terminal and the said carbon plates connected by wire forming a positive terminal, substantially as shown and described.

2. In a galvanic cell, a receptacle of concrete having a ventilated lid and cemented pipe openings provided internally with a false bottom and a systematically arranged filling consisting of porous jars with a partial filling of particles of iron and a silvered ribbon suspended in each jar, vertical carbon plates against the walls of the receptacle and between the said jars, inverted carbon cups and granulated carbon packing around said carbon plates, vertical bolts and beams and springs compressed by nuts onto the filling of granulated carbon, the several silvered ribbons connected by wire forming the negative pole, and the several carbon plates connected by wire forming the positive pole, the whole filling being covered with the electrolyte fluid, substantially as shown and described.

3. In a galvanic cell, a series of porous jars provided with a partial filling of iron particles and suspended silver ribbons connected by wire forming a negative terminal; a series of carbon plates connected by wire forming a positive terminal, and the said porous jars and carbon plates closely packed in a filling of inverted carbon cups and granulated carbon held within a false bottom tank provided with outlet and inlet pipes and flooded with an electrolyte fluid, substantially as specified.

4. In a galvanic cell, an upper and a lower tank each provided with a false bottom and a ventilated lid, said tanks arranged one above the other and connected by an overflow siphon pipe above leading from the upper to the lower tank, and a pipe from the lower tank leading through a pump and a settling tank back into the upper tank as a means of alternately filling and emptying the said tanks with an electrolyte fluid, as shown and described.

5. In a galvanic cell, a filling consisting of a series of porous jars arranged on a false bottom, interspersed with a series of vertical carbon plates and packed closely around and between with inverted carbon cups and granulated carbon in alternate layers; said porous jars provided with a partial filling of iron particle and silver ribbons suspended in each of the said jars and connected together by wire extending out as a negative terminal, and the carbon plates connected together by wire extending out as a positive terminal, the whole mass being submerged with the electrolyte fluid, for the purposes shown and specified.

6. In a galvanic battery, a two fluid cell comprising an electrode of carbon immersed in a solution of an iron salt subjected to atmospheric oxidation, and an opposed electrode of iron in an electrolyte of ferrous salt, the two fluids separated by a porous partition, and a containing vessel for said electrodes, electrolytes, and partitions.

7. In a galvanic battery, a cell comprising an electrode of granulated carbon, an opposed electrode of iron, an electrolyte of iron salt, a containing vessel for said electrodes and said electrolyte, combined with means for exposing the granulated carbon element to the atmosphere.

In testimony whereof, I affix my signature, in presence of two witnesses.

BAROUKH JONAS.

Witnesses:

MARIAN BOSSARD,

LILLIAN FOX.