(19) Europäisches Patentamt
European Patent Office
Office européen des brevets

(11) EP 1 112 700 B1

(12) **EUROPEAN PATENT SPECIFICATION**

(45) Date of publication and mention of the grant of the patent:
20.09.2006 Bulletin 2006/38

(21) Application number: **00128146.8**

(22) Date of filing: **21.12.2000**

(51) Int Cl.:
A44B 19/10 *(2006.01)* ***A44B 19/12*** *(2006.01)*
A44B 19/06 *(2006.01)* ***A44B 19/54*** *(2006.01)*
A44B 19/56 *(2006.01)* ***A44B 19/00*** *(2006.01)*

(54) **Slide fastener**

Reissverschluss

Fermeture à glissière

(84) Designated Contracting States:
DE ES FR GB IT

(30) Priority: **27.12.1999 JP 36907099**

(43) Date of publication of application:
04.07.2001 Bulletin 2001/27

(73) Proprietor: **YKK Corporation**
Chiyoda-ku,
Tokyo (JP)

(72) Inventors:
- **Nagata, Kazuo**
  Kurobe-shi,
  Toyama-ken (JP)
- **Tanaka, Shigenobu**
  Kurobe-shi,
  Toyama-ken (JP)

(74) Representative: **Leinweber & Zimmermann**
Rosental 7,
II Aufgang
80331 München (DE)

(56) References cited:
EP-A- 0 299 500
EP-A- 0 384 318
EP-A- 0 387 905

Note: Within nine months from the publication of the mention of the grant of the European patent, any person may give notice to the European Patent Office of opposition to the European patent granted. Notice of opposition shall be filed in a written reasoned statement. It shall not be deemed to have been filed until the opposition fee has been paid. (Art. 99(1) European Patent Convention).

EP 1 112 700 B1

Printed by Jouve, 75001 PARIS (FR)

Description

BACKGROUND OF THE INVENTION

1. Field of the Invention

[0001] The invention relates to a slide fastener and more particularly to a slide fastener including fastener elements made of synthetic resin or metal having a surface coated with a metallic coating layer so that it is glossy and ornamentally beautiful.

2. Description of the Related Art

[0002] According to a conventional slide fastener disclosed in Japanese Patent Publication No. 7-110245, an entire surface of a coil-shaped fastener element or zigzag-shaped fastener element made of synthetic resin monofilament is coated with a metallic coating layer having a gloss peculiar to metal. According to a slide fastener disclosed in Japanese Patent No. 261380, a fastener element of synthetic resin mono-filament attached to a fastener tape and an exposed portion of a core cord being seen inserted within the fastener element are coated with a metallic coating layer.

[0003] In the above described latter slide fastener in which the exposed portion of the fastener element being seen is coated with the metallic coating layer as well as the slide fastener in which the entire surface of the coil-shaped fastener element or zigzag-shaped fastener element is coated with the metallic coating layer, the metallic coating layer formed on an outside face of the fastener element is scraped by a guide flange when the slider slides. The reason is that small burrs in a parting line existing in an inner face of the guide flange of a slider formed by die-casting scrapes the metallic coating layer formed on the fastener element and scatters its metallic powder. Therefore, if this slide fastener is used in particularly clothes or bags required to be fashionable, the scraped metallic powder adhere to the clothes or bag. Consequently, some people complain this damages the fashionable appearance value of the clothes or bag. For the reason, improvement of a molding die for manufacturing of the slider has been considered. However, such a molding die capable of solving the above problem has not been invented.

[0004] EP-A-0 387 905 discloses fastener elements for use in a slide fastener according to the preamble of claim 1 in which, regardless of the quality of material, a metallic coating layer having an excellent adhesiveness and 0.001 to 1.0 μm in thickness simply and easily formed on the surface of a fastener element member, so that the surface thereof gets out the luster of metal. The surface of the metallic coating layer may further be formed at least thereon with a finishing coat layer. Further, a slide fastener is disclosed with a light weight and flexibility in which such a fastener element member is being made synthetic resin having the luster of metal on the surface thereof.

[0005] EP-A-0 299 500 discloses a light-reflective or luminous slide fastener which is provided with a light-reflective strip including a multiplicity of glass beads and bonded to a row of coupling elements on each of a pair of fastener tapes. The strip extends longitudinally at least partially over the upper surfaces of the row of elements or extends more extensively over the element surfaces so as to mask substantially the entire elements from view when the fastener is closed.

[0006] EP-A-0 384 318 discloses a slide fastener comprising a pair of stringer tapes carrying rows of discrete coupling elements along their respective longitudinal inner edges and a slider reciprocably movable along the rows of elements to open and close the fastener. A decorative coating is deposited with heat and pressure upon the coupling element and specifically extents at least partially into a rear end region of the coupling element to ensure freedom of separation of the coating from the skin of the coupling element.

SUMMARY OF THE INVENTION

[0007] The invention has been achieved in views of the above described problems and an object of the invention is to provide a side fastener comprising a fastener element in which when it is intended to form a metallic coating layer on a fastener element made of synthetic resin or metal, such a phenomenon that the metallic coating layer is scraped and that metallic powder is scattered is prevented by canceling formation of the metallic coating layer on an outer side face of the fastener element with which a guide flange of a slider makes contact, thereby securing a metallic coating layer having a beautiful appearance.

[0008] Another object of the invention is to provide a slide fastener comprising a fastener element in which such a fear that the metallic powder are scattered is prevented by also canceling formation of the metallic coating layer on an outer side face of a coupling head, which makes contact with a guide post of the fastener element, thereby securing a metallic coating layer having a beautiful appearance.

[0009] And another object of the invention is to provide a slide fastener comprising a fastener element in which a metallic coating layer having a different beautiful appearance depending thereon is formed by specifying the shape of the fastener element.

[0010] Also another object of the invention is to provide a slide fastener comprising a fastener element in which a metallic coating layer having a different beautiful appearance depending thereon is formed by specifying the shape of the slide fastener.

[0011] Further object of the invention is to provide a slide fastener in which a metallic coating layer formed on the fastener element can be made to function effectively by specifying the configuration of sewing yarn, weaving yarn and warp knitting yarn for attaching and fixing the

fastener element onto a fastener tape.

[0012] And further object of the invention is to provide a slide fastener in which the metallic coating layer formed on the surface of the fastener element can be protected effectively by using a slider formed by die-casting or injection molding, which has been said to have a defect.

[0013] To achieve the above object, according to the main aspect of the invention, there is provided a slide fastener having a pair of fastener stringers to which fastener elements are attached along facing edge portions of a pair of fastener tapes in the longitudinal direction and a slider which is slidable along the fastener elements and can couple or separate the fastener elements, wherein the Fastener elements are formed of a synthetic resing mono-filament and a metallic coating layer is formed on top surface of an upper leg portion of a fastener element except an outer side face thereof which may come into sliding contact with a guide flange of the slider.

[0014] Preferably, the metallic coating layer is formed on the top surface of the fastener element attached to the fastener tape, made of synthetic resin or metal, except an outer side face of a coupling head of the fastener element in contact with a guide post of the slider.

[0015] Preferably, the fastener element, which is to be attached to the fastener tape and comprises the metallic coating layer, is formed of coil-shaped fastener elements formed by winding synthetic resin monofilament in the shape of coil.

[0016] Alternatively, the fastener element, which is to be attached to the fastener tape 10 and comprises the metallic coating layer, is formed of zigzag-shaped fastener elements formed by bending synthetic resin monofilament in the shape of zigzag.

[0017] Preferably, the fastener element, comprising the metallic coating layer, is sewed to a side edge of the fastener tape with sewing yarn, thereby securing a metallic gloss.

[0018] Alternatively, the fastener element, comprising the metallic coating layer, is woven into a side edge of the fastener tape with weaving yarn, thereby securing a metallic gloss.

[0019] Still alternatively, the fastener element, comprising the metallic coating layer, is knitted into a side edge of the fastener tape with warp knitting yarn, thereby securing a metallic gloss.

[0020] Preferably, the sewing yarn, weaving yarn and warp knitting yarn, disposed on top of the fastener element comprising the metallic coating layer for fixing the fastener element onto the fastener tape, is formed of a transparent yarn or a yarn having a color similar to that of the metallic coating layer, thereby improving the function of the metallic coating layer.

[0021] Preferably, the slider is formed by die-casting or injection molding using metal or synthetic resin, thereby securing a metallic gloss.

BRIEF DESCRIPTION OF THE DRAWINGS

[0022]

Fig. 1 is a perspective view of a coil-shaped fastener element made of synthetic resin.
Fig. 2 is a front view of a slide fastener comprising the coil-shaped fastener element.
Fig. 3 is a sectional view of the slide fastener comprising the coil-shaped fastener element of Fig. 2.
Fig. 4 is a sectional view of a fastener stringer comprising the coil-shaped fastener element.
Fig. 5 is a side view of a fastener stringer comprising the coil-shaped fastener element of Fig. 4.
Fig. 6 is a sectional view of a fastener stringer comprising the coil-shaped fastener element having no core cord.
Fig. 7 is a perspective view of a zigzag-shaped fastener element made of synthetic resin.
Fig. 8 is a front view of a fastener stringer comprising the zigzag-shaped fastener element.
Fig. 9 is a sectional view of a fastener stringer comprising the zigzag-shaped fastener element of Fig. 8.
Fig. 10 is a front view of a woven-in fastener stringer.
Fig. 11 is a front view of a knitted-in fastener stringer.

DESCRIPTION OF THE PREFERRED EMBODIMENTS

[0023] Hereinafter, the preferred embodiments of a slide fastener of the invention will be described in detail with reference to the accompanying drawings.

[0024] In the slide fastener of the present invention, as shown in Fig.2, the slide fastener has a pair of fastener stringers 23, 23, to which fastener elements 1, 1 are attached along facing side edge portions of a pair of fastener tapes 10, 10 in a longitudinal direction, the fastener tapes 10, 10 being woven or knitted with synthetic fiber such as polyester or nylon, or natural fiber such as cotton, and a slider 17 which is slidable along the fastener elements 1, 1 and can couple or separate the fastener elements 1, 1. And a fastener element 1 for the slide fastener is formed of synthetic resin such as polyamide, polyester and the like. As shown in Fig. 1, the fastener element 1 of a first embodiment of the invention forms a coil-shaped fastener element 2 by winding synthetic resin monofilament in the shape of coil. This coil-shaped fastener element 2 is comprised of coupling head 6, upper leg portion 7, lower leg portion 8, and inverted portion 9 for connecting the upper leg portion 7 with the lower leg portion 8. A metallic coating layer 20 is formed on a surface of the upper leg portion 7 except an outer side face of the coupling head 6, an outer side face of the inverted portion 9, and the lower leg portion 8.

[0025] The metallic coating layer 20 is formed by depositing aluminum, chrome, nickel, stainless, gold, silver, copper, brass or the like in the form of a thin film or creating a metallic coating by vacuum deposition, ion plating, sputtering, chemical plating or the like. Preferably, this

metallic coating layer 20 is formed in thickness of 0.001 to 1 μm.

[0026] As shown in Figs. 4 and 5, a core cord 11 is inserted into the coil-shaped fastener element 2 comprising the metallic coating layer 20 and then, the fastener element 2 is sewed to a side edge of a fastener tape 10 with the sewing yarn 12 by double ring sewing system using three yarns by two needles so as to form a fastener stringer 23. As shown in Figs. 2 and 3, a slider 17 is placed to catch right and left fastener stringers 23 and the right and left coupling heads 6 are engaged with each other to form the slider fastener by sliding the slider 17.

[0027] The slider 17 made of metal is formed by die-casting or made of synthetic resin is formed by injection. As shown in Figs. 2 and 3, in the slider 17 an upper wing plate 33 and a lower wing plate 34 disposed in parallel on the side of a shoulder 31 are connected by a guide post 18, and an element guide groove 36, in which the fastener element 2 may be inserted, is provided between respective plates. A long guide flange 19 being protruded toward the lower wing plate 34 is formed on both of side edge portions of the upper wing plate 33. Although short guide flanges being slightly protruded toward the upper wing plate 33 are also formed on both of side edge portions of the lower wing plate 34 in the shown embodiment, the short guide flange may be omitted, if necessary. And a zipper pull attaching portion 32 is fixed to a surface of the upper wing plate 33, and a zipper pull 35 is attached thereto so as to swing freely. Above-described guide flange 19 of the slider 17 has a shape suitable for the coil-shaped fastener element 2, but guide flanges disposed on the upper and lower wing plates 33, 34 are respectively protruded toward the other plate with a same length, in a zigzag-shaped fastener element 3 or single-body fastener elements 4 and 5 made of metal or synthetic resin, which will be described later.

[0028] The metallic coating layer 20 is formed on the surface of the upper leg portion 7 of the coil-shaped fastener element 2 and not formed positively on the outer side face of the coupling head 6 and the outer side face of the inverted portion 9. As for the reason, small burrs in a parting line often exists in an inner face of the guide flange 19 of the slider 17 formed by die-casting or injection and even if the metallic coating layer 20 is formed on the surface of the coil-shaped fastener element 2, when the slider 17 is slid, the burrs on the guide flange 19 scrapes the deposited metallic coating layer 20 from the inverted portion 9, thereby scattering metallic powder. Further, the metallic coating layer 20 may be peeled from an outer side face of the coupling head 6, which comes into contact with the guide post 18 of the slider 17, so there is a fear that metallic powder may be scattered.

[0029] Therefore, when it is intended to provide the metallic coating layer 20 on the surface of the coil-shaped fastener element 2, unless the metallic coating layer 20 is formed on the outer side face of the inverted portion 9 and the outer side face of the coupling head 6 which the slider 17 comes into contact with when it slides, no metallic powder is scattered. Thus, a desired purpose is achieved, so that this fastener element can be used preferably in products required to have a fashionable performance.

[0030] Further, if the fashionable performance of the slide fastener is considered, by sewing the coil-shaped fastener element 2 to the fastener tape 10 with the sewing yarn 12 which is colorless transparent or has a color similar to that of the metallic coating layer 20, favorably the sewing yarn 12 does not attract much attention in the coil-shaped fastener element 2 having the metallic coating layer 20.

[0031] According to a fastener stringer 23 of a second embodiment shown in Fig. 6, the coil-shaped fastener element 2 is formed by winding synthetic resin monofilament in the shape of coil. In this fastener element 2, the metallic coating layer 20 is formed on the surface of the upper leg portion 7 and not formed on the outer side face of the coupling head 6, the outer side face of the inverted portion 9, and the lower leg portion 8. The coil-shaped fastener element 2 is sewed to the fastener tape 10 by double ring sewing system without core cord, and colorless transparent or white color yarn is used as the sewing yarn 12. This fastener stringer 23 also prevents the peeling off or scrapping of the metallic coating layer 20 and the scattering of the metallic powder.

[0032] The fastener element 1 of a third embodiment of the present invention shown in Fig. 7 is a zigzag-shaped fastener element 3 formed by bending synthetic resin monofilament in the shape of zigzag and turning back with respect to the center thereof. This zigzag-shaped fastener element 3 is comprised of the coupling head 6, upper leg portion 7 and lower leg portion 8 connected to the coupling head 6, and inverted portion 9 for connecting the leg portions 7 and 8 to the adjacent ones. Then, the metallic coating layer 20 is formed on the surface of the upper leg portion 7 except the outer side face of the coupling head 6, the outer side face of the inverted portion 9 of the upper leg portion 7 and the lower leg portion 8 and inverted portion 9 of the lower leg portion 8, like the first embodiment.

[0033] In this zigzag-shaped fastener element 3, as shown in Figs. 8 and 9, a side edge of the fastener tape 10 is sandwiched by the upper leg portion 7 and lower leg portion 8 and the upper and lower leg portions 7 and 8 are sewed to the fastener tape 10 with the sewing yarn 12 by arranging the double ring sewing system using two yarns by a single needle in parallel to each other, so as to form the fastener stringer 23. If the sewing yarn 12 which is colorless transparent or has a color similar to that of the metallic coating layer 20 is used, the metallic gloss of the metallic coating layer 20 looks beautiful. Further, it is permissible to dispose the looper yarn and needle yarn of the double ring sewing system in reverse.

[0034] In the zigzag-shaped fastener element 3 also, even if the guide flange 19 comes into contact with the outer side face of the inverted portion 9 of the upper leg portion 7 or the guide post 18 comes into contact with

the outer side face of the coupling head 6 when the slider 17 slides, there is no fear that the metallic coating layer 20 may be peeled or scraped by the guide flange 19 or the guide post 18, because the metallic coating layer 20 is not formed on the outer side face of the inverted portion 9 and the outer side face of the coupling head 6. Meanwhile, it is permissible to sew the zigzag-shaped fastener element 3 on a side edge of the fastener tape 10 to be placed thereon.

[0035] In the fastener stringer 23 of a fourth embodiment of the invention shown in Fig. 10, when the fastener element 1 is attached and fixed to the fastener tape 10, the fastener element 1 is woven into a side edge of the fastener tape 10 with the weaving yarn 13. More specifically, the core cord 11 is inserted within the coil-shaped fastener element 2 shown in Fig. 1 and this coil-shaped fastener element 2 is woven into the fastener tape 10 with warp yarn 14 for weaving the fastener tape 10 and weft yarn 15 of double pick. In this case, if a colorless transparent yarn or a yarn having a color similar to that of the metallic coating layer 20 is used for the warp yarn 14 to be disposed on top face of the metallic coating layer 20 of the coil-shaped fastener element 2, the metallic gloss of the metallic coating layer 20 is not lost. Because the metallic coating layer 20 does not affect the sliding of the slider 17 directly, there is no fear that no metallic powder may be scattered.

[0036] In a fastener stringer 23 of a fifth embodiment of the invention shown in Fig. 11, when the fastener element 1 is attached and fixed to the fastener tape 10, the fastener element 1 is knitted into a side edge of the fastener tape 10 with the warp knitting yarn 16. More specifically, the coil-shaped fastener element 2 shown in Fig. 1 is knitted into a side edge of the fastener tape 10 having warp knitting structure with warp knitting yarn 16 such as chain knitting yarn, two needle stitch yarn, tricot yarn or the like. If colorless transparent yarn or a yarn having a color similar to that of the metallic coating layer 20 is used for the warp knitting yarn 16 to be disposed on the top face of the metallic coating layer 20 of the coil-shaped fastener element 2, the metallic gloss of the metallic coating layer 20 is not lost. Because the metallic coating layer 20 does not affect the sliding of the slider 17 directly, there is also no fear that the metallic powder may be scattered.

[0037] Further, by forming the fastener element 1 with colorless transparent material, it does not attract much attention that there is no metallic coating layer 20 on the outer face of the fastener element 1, thereby improving the good appearance of the slide fastener.

[0038] The slider fastener of the present invention has the above-described structure, and the following effects are exerted with this structure.

[0039] According to the invention, the metallic coating layer 20 is formed on the top side surface of the fastener element 1, except the outer side face thereof which makes contact with the guide flange 19 of the slider 17 and the outer side face of the coupling head 6 which makes contact with the guide post 18 of the slider 17. As a result, such a phenomenon that the metallic coating layer 20 is scraped and metallic powder is scattered by contact with small burrs existing in the guide flange 19 or the guide post 18, is prevented. Thus, the fastener element 1 having a beautiful metallic gloss can be used for a long term and a cheap, fashionable slide fastener can be provided to meet user's demands.

[0040] And the invention can be applied to various types of the fastener elements 1, such as the coil-shaped fastener element 2, zigzag-shaped fastener element 3, injection-molded fastener element4, made of synthetic resin and metallic single-unit fastener elements 5. As a result, in addition to the effect of the first or second aspect, there is an effect that various types of fastener elements 1 having a beautiful metallic gloss can be supplied to satisfy user's demands.

[0041] Further, the fastener element 1 is sewed to a side edge of the fastener tape 10 with sewing yarn 12 or woven into with weaving yarn 13 or knitted into with warp knitting yarn 16. As a result, the fastener element 1 having a beautiful metallic gloss can be applied to various types of the slide fasteners easily, so that a beautiful slide fastener can be produced.

[0042] And further, the sewing yarn 12, weaving yarn 13 and warp knitting yarn 16 to be disposed on top of the fastener element 1 for fixing the fastener element 1 onto the fastener tape 10 is formed of a transparent yarn or a yarn having a color similar to that of the metallic coating layer 20. As a result, the yarn does not attract much attention, so that without hampering the function of the metallic coating layer 20 of the fastener element 1, the beautiful metallic gloss can look more beautiful.

[0043] Still further, the slider 17 is formed by die-casting or injection molding using metal or synthetic resin. As a result, even if a conventional slider is used, there is no fear that the metallic coating layer 20 formed on the fastener element 1 may be damaged, so that the beautiful metallic gloss can be maintained for a long term. Therefore, the effects which the present invention exerts are very conspicuous.

Claims

1. A slide fastener having a pair of fastener stringers (23, 23) to which fastener elements (1, 1) are attached along facing edge portions of a pair of fastener tapes (10, 10) in the longitudinal direction and a slider (17) which is slidable along the fastener elements (1, 1) and can couple or separate the fastener elements (1,1), wherein the fastener elements (1, 1) are formed of a synthetic resin mono-filament, being **characterized in that** a metallic coating layer (20) is formed on a top surface of an upper leg portion of a fastener element (1) except an outer side face thereof which may come into sliding contact with a guide flange (19) of the slider (17).

2. A slide fastener comprising a fastener element for slide fastener according to claim 1, being **characterized in that** the metallic coating layer (20) is formed on the top surface of the fastener element (1) except an outer side face of a coupling head (6) in contact with a guide post (18) of the slider (17).

3. A slide fastener comprising a fastener element for slide fastener according to claim 1, being **characterized in that** the fastener element (1) is formed of coil-shaped fastener elements (2) formed by winding synthetic resin monofilament in the shape of coil.

4. A slide fastener comprising a fastener element for slide fastener according to claim 1, being **characterized in that** the fastener element (1) is formed of zigzag-shaped fastener elements (3) formed by bending synthetic resin monofilament in the shape of zigzag.

5. A slide fastener according to claim 3 or 4, being **characterized in that** the fastener element (1) is sewed to a side edge of a fastener tape (10) with sewing yarn (12).

6. A slide fastener according to claim 3 or 4, being **characterized in that** the fastener element (1) is woven into a side edge of the fastener tape (10) with weaving yarn (13).

7. A slide fastener according to claim 3 or 4, being **characterized in that** the fastener element (1) is knitted into a side edge of the fastener tape (10) with warp knitting yarn (16).

8. A slide fastener according to claim 5, 6 or 7, being **characterized in that** the sewing yarn (12), weaving yarn (13) and warp knitting yarn (16) to be disposed on top of the fastener element (1) for fixing the fastener element (1) onto the fastener tape (10) is formed of a transparent yarn or a yarn having a color similar to that of the metallic coating layer (20).

9. A slide fastener according to claim 1, being **characterized in that** the slider (17) is formed by die-casting or injection molding using metal or synthetic resin.

10. A slide fastener according to claim 1, being **characterized in that** the fastener element (1) is formed of colorless transparent material.

Patentansprüche

1. Ein Reißverschluss mit zwei Reißverschlusshälften (23, 23), an denen die Verschlussglieder (1, 1) entlang der gegenüberliegenden Randbereiche der Tragbänder (10, 10) in Längsrichtung befestigt sind und ein Schieber (17), der an den Verschlussgliedern (1, 1) entlang geschoben werden und die Verschlussglieder (1, 1) verbinden oder trennen kann, wobei die Verschlussglieder (1, 1) aus synthetischem Harz-Monofilament gebildet sind, **dadurch gekennzeichnet, dass** eine Metallschicht (20) auf der Oberfläche eines oberen Schenkelteils eines Verschlussgliedes (1) gebildet ist, mit Ausnahme der Seitenfläche, die mit der Führungsleiste (19) des Schiebers (17) in Schiebekontakt kommen könnte.

2. Ein Reißverschluss, umfassend ein Verschlussglied für einen Reißverschluss nach Anspruch 1, **dadurch gekennzeichnet, dass** die Metallschicht (20) an der Oberfläche des Verschlussgliedes (1) gebildet ist, mit Ausnahme der Seitenfläche eines Kuppelkopfes (6) in Kontakt mit einer Führungssäule (18) des Schiebers (17)

3. Ein Reißverschluss, umfassend ein Verschlussglied für einen Reißverschluss nach Anspruch 1, **dadurch gekennzeichnet, dass** das Verschlussglied (1) aus wendelförmigen Verschlussgliedern (2) gebildet ist, die gebildet werden, indem ein synthetisches Harz-Monofilament in Form eines Wendels gewickelt wird.

4. Ein Reißverschluss, umfassend ein Verschlussglied für einen Reißverschluss nach Anspruch 1, **dadurch gekennzeichnet, dass** das Verschlussglied (1) aus zickzackförmigen Verschlussgliedern (3) gebildet ist, die gebildet werden, indem ein synthetisches Harz-Monofilament in Zickzackform gebogen wird.

5. Ein Reißverschluss nach Anspruch 3 oder 4, **dadurch gekennzeichnet, dass** das Verschlussglied (1) mit einem Nähfaden (12) an einen Seitenrand eines Tragbandes (10) angenäht wird.

6. Ein Reißverschluss nach Anspruch 3 oder 4, **dadurch gekennzeichnet, dass** das Verschlussglied (1) mit einem Webfaden (13) in einen Seitenrand des Tragbandes (10) eingewebt wird.

7. Ein Reißverschluss nach Anspruch 3 oder 4, **dadurch gekennzeichnet, dass** das Verschlussglied (1) mit einem Kettwirkfaden (16) in einen Seitenrand des Tragbandes (10) eingewirkt wird.

8. Ein Reißverschluss nach Anspruch 5, 6 oder 7, **dadurch gekennzeichnet, dass** der auf die Oberfläche des Verschlussgliedes (1) anzuwendende Nähfaden (12), Webfaden (13) und Kettwirkfaden (16) zum Befestigen des Verschlussgliedes (1) am Tragband (10) aus einem transparenten Faden gebildet wird oder einem Faden mit einer Farbe, die der Farbe der Metallschicht (20) ähnelt.

9. Ein Reißverschluss nach Anspruch 1, **dadurch ge-**

kennzeichnet, dass der Schieber (17) im Druckguss- oder Spritzgussverfahren unter Verwendung von Metall oder synthetischem Harz gebildet wird.

10. Ein Reißverschluss nach Anspruch 1, **dadurch gekennzeichnet, dass** das Verschlussglied (1) aus farblosem transparentem Material gebildet wird.

Revendications

1. Fermeture à glissière comportant une paire de bandes d'accrochage (23, 23) auxquelles sont fixés des éléments d'accouplement (1, 1) le long de parties de bord en vis-à-vis d'une paire de rubans de fermeture (10, 10) dans la direction longitudinale et un curseur (17) qui peut glisser le long des éléments d'accouplement (1, 1) et qui peut accoupler ou séparer les éléments d'accouplement (1, 1), dans laquelle les éléments d'accouplement (1, 1) sont formés d'un monofilament de résine synthétique, **caractérisée en ce qu'**une couche de revêtement métallique (20) est formée sur une surface supérieure d'une partie branche supérieure d'un élément d'accouplement (1) sauf une face extérieure de celle-ci qui peut se trouver en contact glissant avec une lèvre de guidage (19) du curseur (17).

2. Fermeture à glissière comprenant un élément d'accouplement pour fermeture à glissière selon la revendication 1, **caractérisée en ce que** la couche de revêtement métallique (20) est formée sur la surface supérieure de l'élément d'accouplement (1) sauf une face extérieure d'une tête d'accouplement (6) en contact avec un téton de guidage (18) du curseur (17).

3. Fermeture à glissière comprenant un élément d'accouplement pour fermeture à glissière selon la revendication 1, **caractérisée en ce que** l'élément d'accouplement (1) est constitué d'éléments d'accouplement en forme de spires (2) formés en enroulant un monofilament de résine synthétique sous la forme d'une bobine.

4. Fermeture à glissière comprenant un élément d'accouplement pour fermeture à glissière selon la revendication 1, **caractérisée en ce que** l'élément d'accouplement (1) est constitué d'éléments d'accouplement en forme de zigzag (3) formés en pliant un monofilament de résine synthétique en zigzag.

5. Fermeture à glissière selon la revendication 3 ou 4, **caractérisée en ce que** l'élément d'accouplement (1) est cousu sur un bord latéral d'un ruban de fermeture (10) avec du fil à coudre (12).

6. Fermeture à glissière selon la revendication 3 ou 4, **caractérisée en ce que** l'élément d'accouplement (1) est tissé dans un bord latéral du ruban de fermeture (10) avec du fil pour tissage (13).

7. Fermeture à glissière selon la revendication 3 ou 4, **caractérisée en ce que** l'élément d'accouplement (1) est tricoté dans un bord latéral du ruban de fermeture (10) avec du fil de tricotage chaîne (16).

8. Fermeture à glissière selon la revendication 5, 6 ou 7, **caractérisée en ce que** le fil à coudre (12), le fil pour tissage (13) et le fil de tricotage chaîne (16) à disposer sur l'élément d'accouplement (1) pour fixer l'élément d'accouplement (1) sur le ruban de fermeture (10) est fait d'un fil transparent ou d'un fil ayant une couleur similaire à celle de la couche de revêtement métallique (20).

9. Fermeture à glissière selon la revendication 1, **caractérisée en ce que** le curseur (17) est fabriqué par coulée sous pression ou par moulage par injection en utilisant un métal ou une résine synthétique.

10. Fermeture à glissière selon la revendication 1, **caractérisée en ce que** l'élément d'accouplement (1) est fait d'un matériau transparent et sans couleur.

FIG. 1

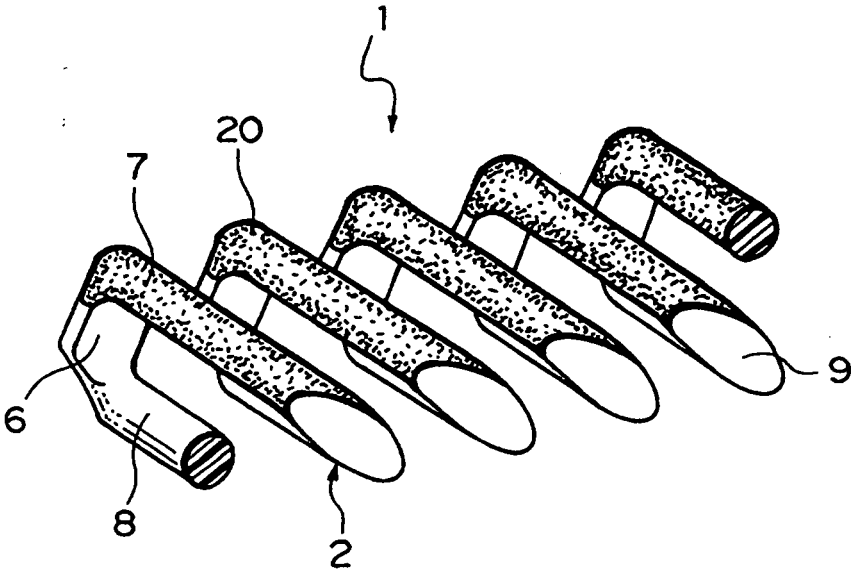

FIG. 2

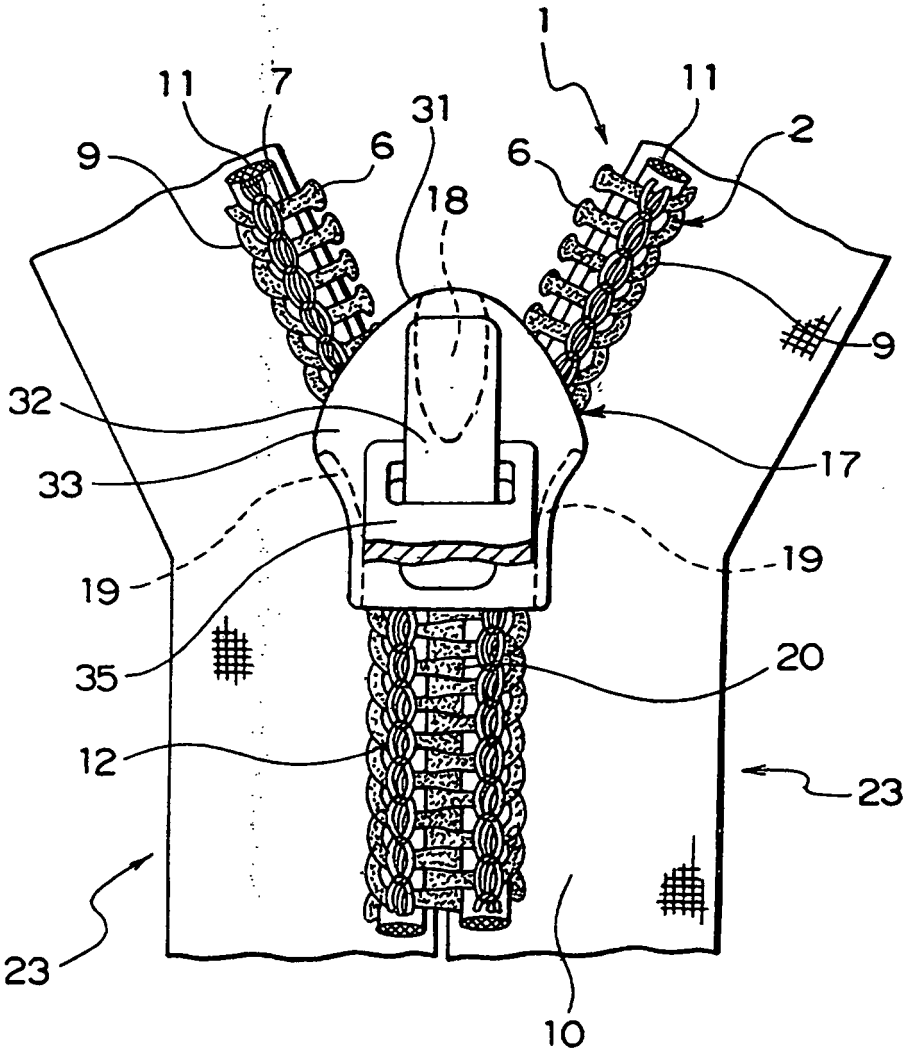

FIG. 3

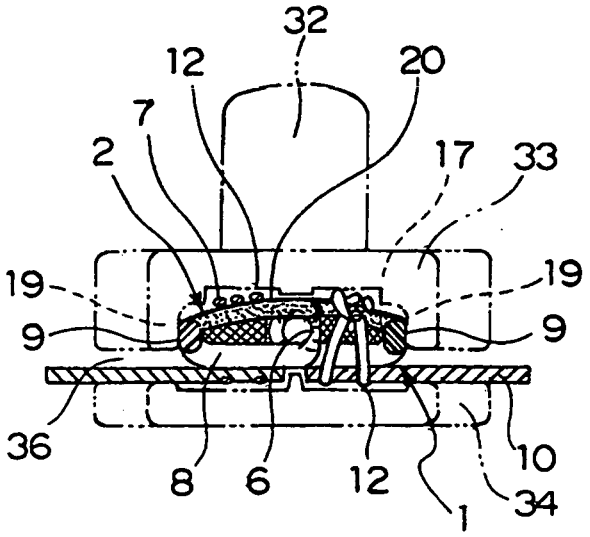

FIG. 4

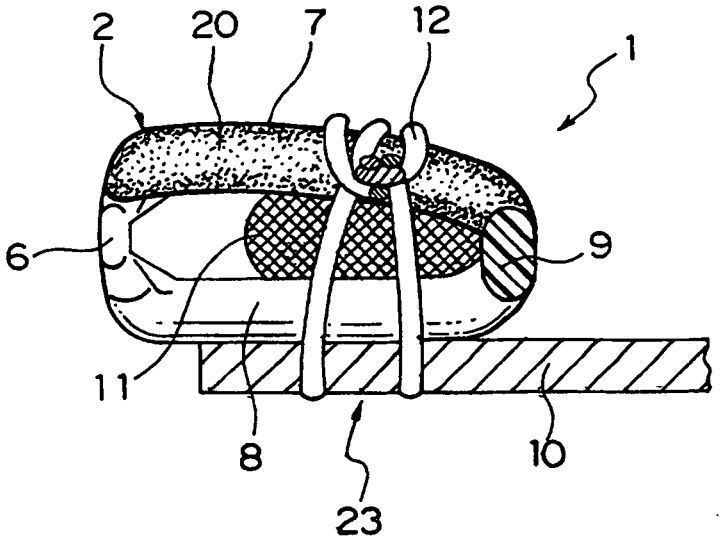

FIG. 5

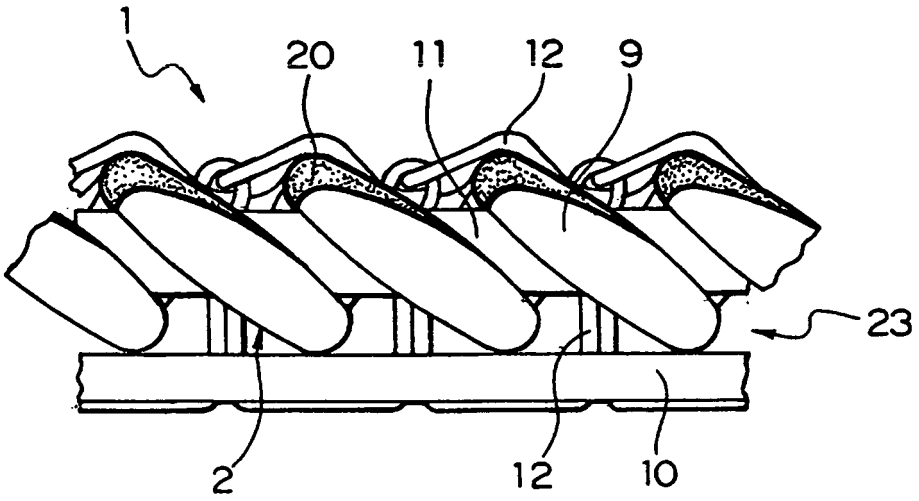

FIG. 6

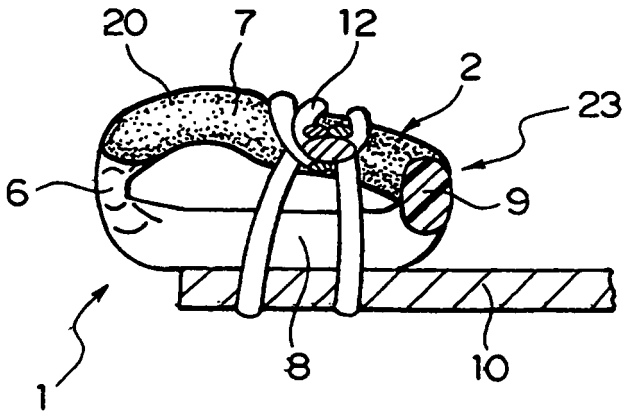

FIG. 7

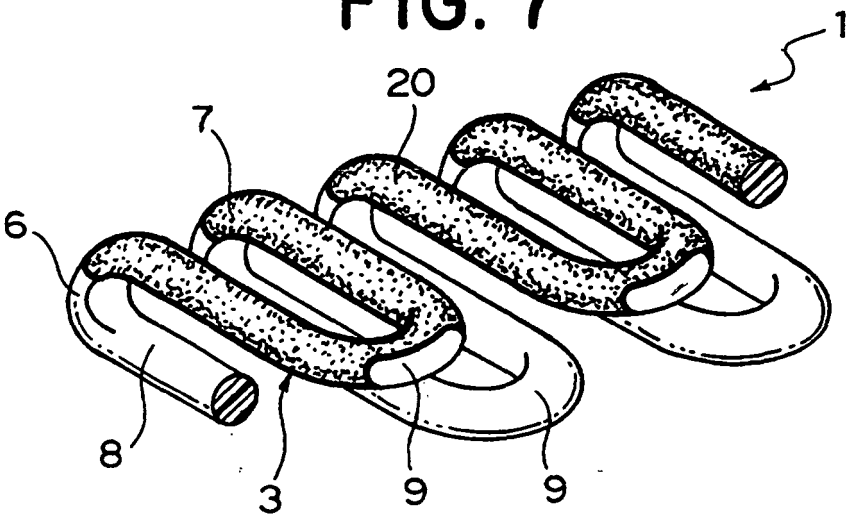

FIG. 8

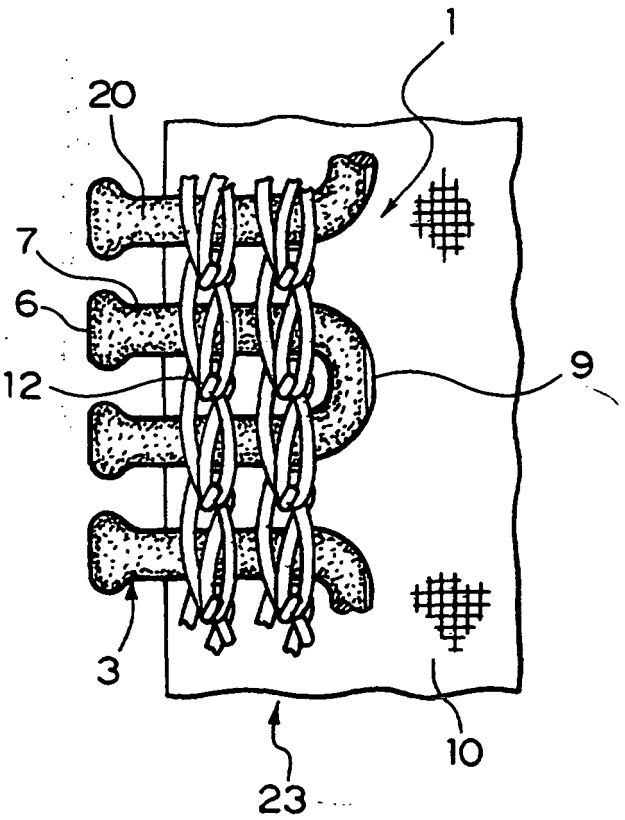

FIG. 9

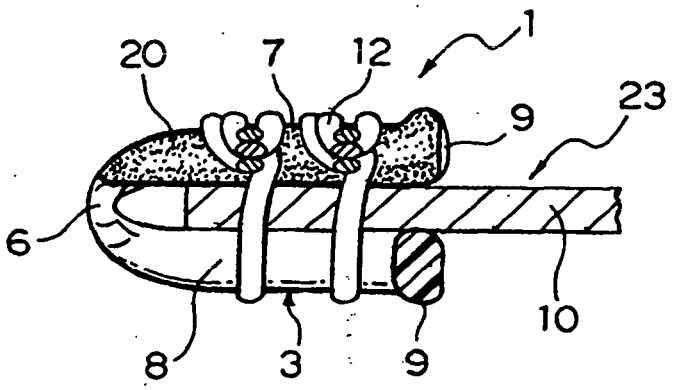

FIG. 10

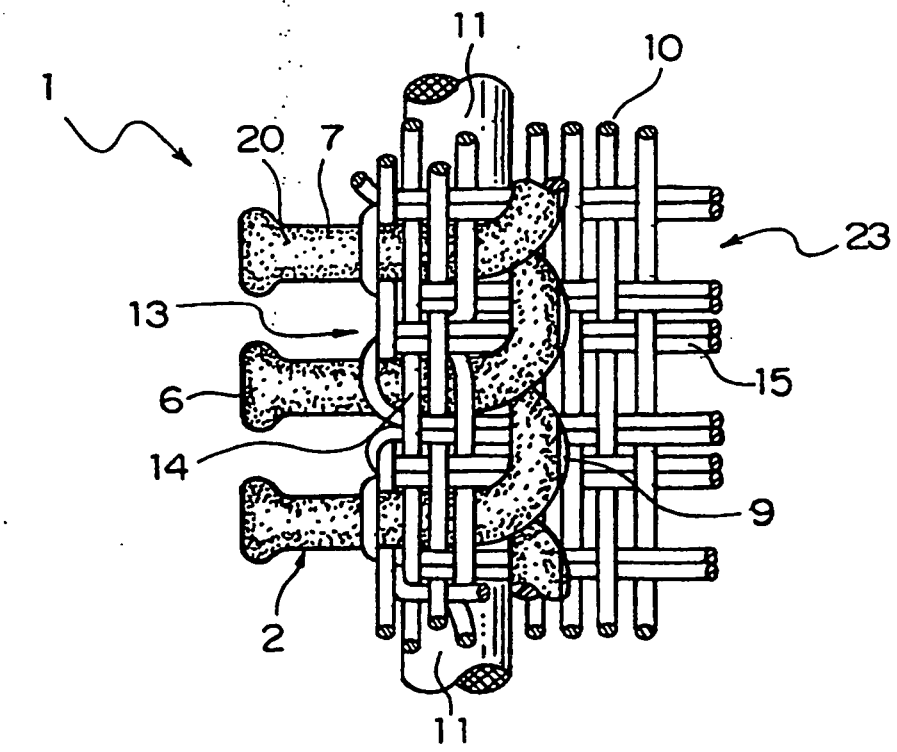

FIG. 11

