United States Patent [19]

Baker

[11] **3,791,073**

[45] **Feb. 12, 1974**

[54] **AIRCRAFT DOOR WITH MOVING HINGE LINE**

[75] Inventor: **Irwin G. Baker**, Bellevue, Wash.

[73] Assignee: **The Boeing Company**, Seattle, Wash.

[22] Filed: **Apr. 28, 1972**

[21] Appl. No.: **248,445**

[52] **U.S. Cl.** **49/249**, 49/255, 49/256, 49/40

[51] **Int. Cl.** **E05d 15/40**

[58] **Field of Search** 49/246–249, 254–256, 49/240–245, 40

[56] **References Cited**

UNITED STATES PATENTS

3,051,280	8/1962	Bergman et al.	49/249
3,004,303	10/1961	Wilmer	49/249
2,845,299	7/1958	Pickering	49/249 X

FOREIGN PATENTS OR APPLICATIONS

524,143	7/1940	Great Britain	49/249

Primary Examiner—Kenneth Downey
Attorney, Agent, or Firm—Christensen & Sanborn

[57] **ABSTRACT**

An aircraft door and hinge assembly therefor is mounted in an opening in an airframe, which opening lies at an angle with the horizontal plane of the aircraft. The door is mounted on a hinge assembly which provides first for upwardly inclined movement of the door to disengage it from its stop engagement with the opening in the airframe. Thereafter, the hinge assembly provides for outward movement of the door, displacing the hinge axis of the door from a position in which the axis makes an acute angle with the horizontal plane of the airframe to a position at which the hinge axis is substantially perpendicular to the horizontal plane. The door is mounted or hinged on the hinge assembly at two points. The hinge assembly provides for one of the hinge points to move outwardly from the airframe a greater distance than the other. Thus the hinge axis can be vertically aligned with respect to the airframe. When the hinge axis is vertically positioned the door can swing to an open position away from the opening in the airframe, allowing ingress and egress through the opening.

18 Claims, 12 Drawing Figures

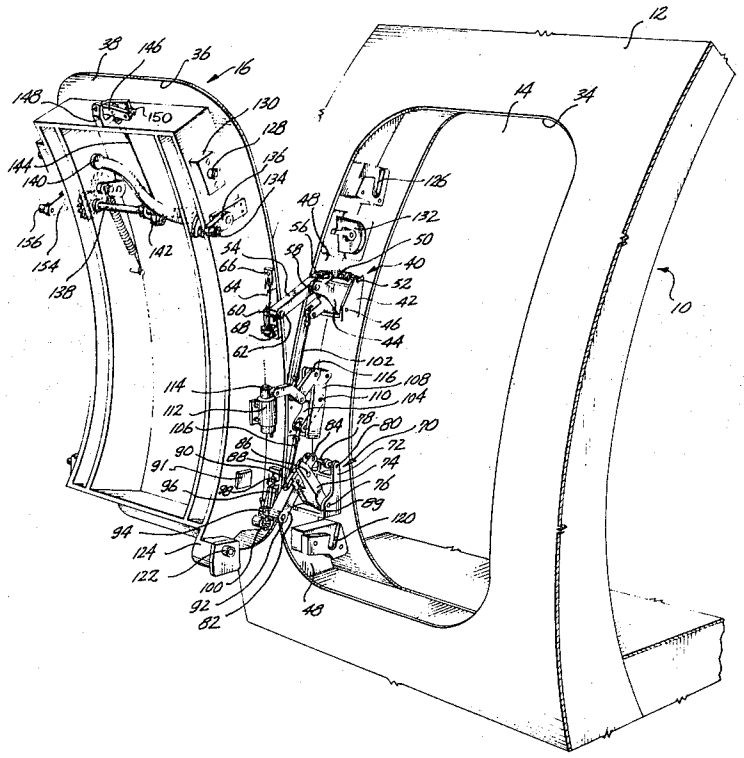

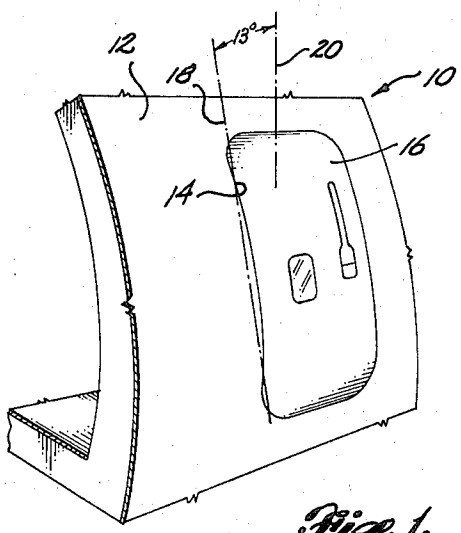

Fig. 1.

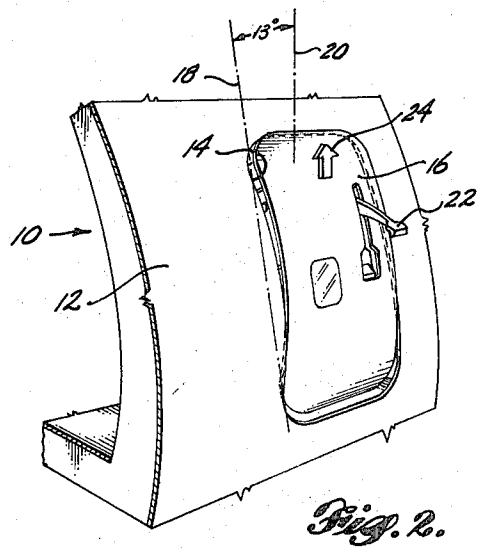

Fig. 2.

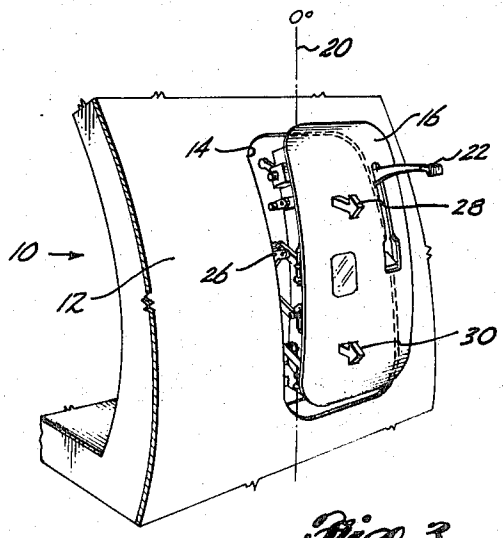

Fig. 3.

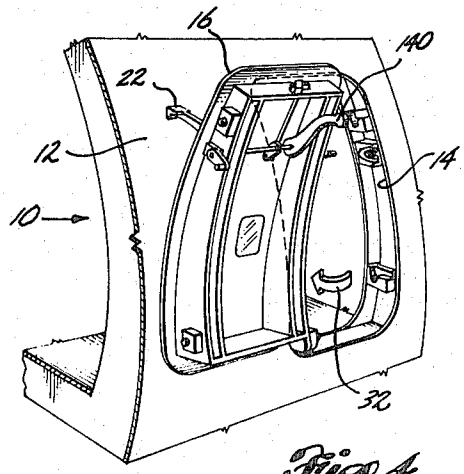

Fig. 4.

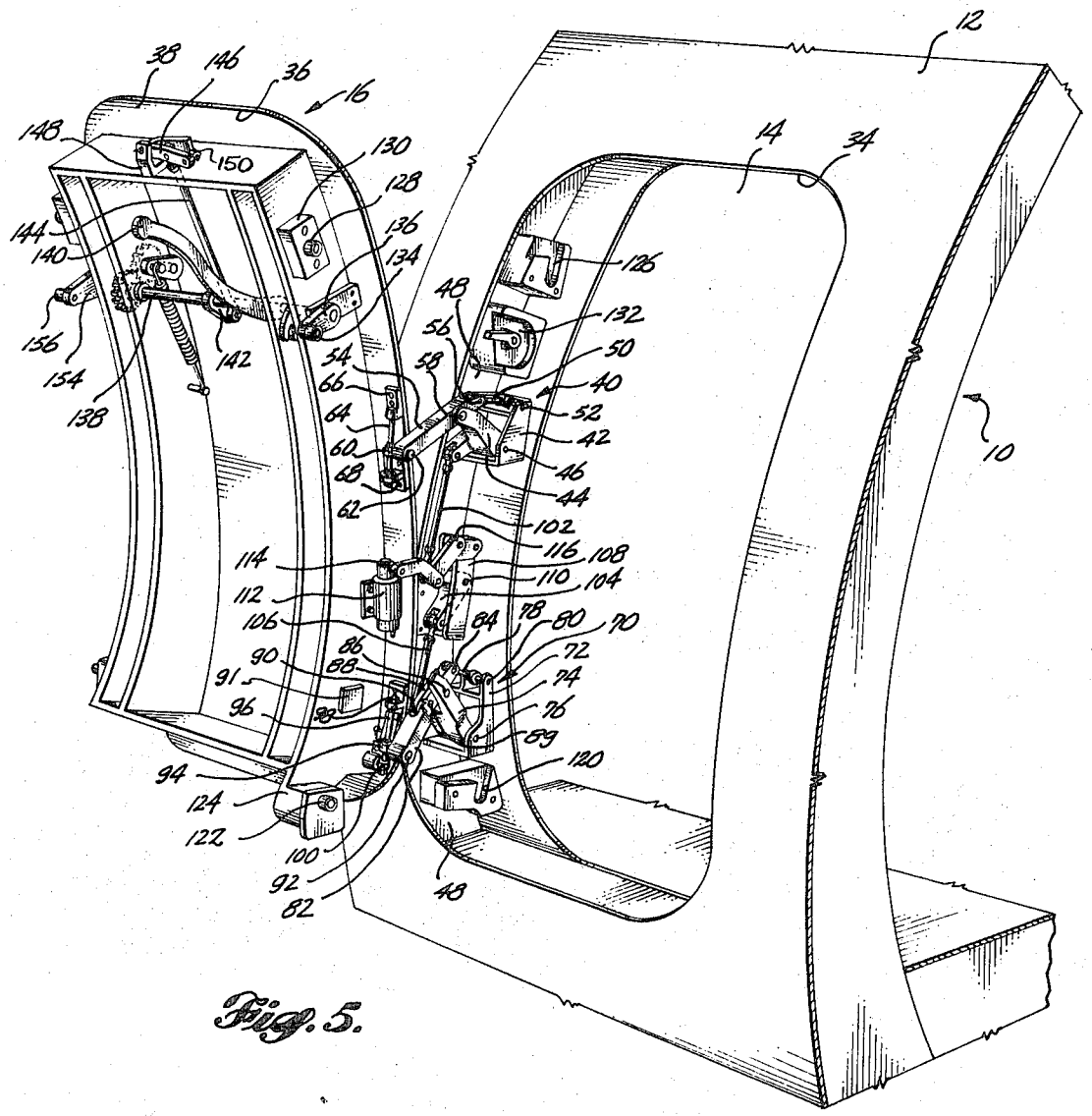
12
38
146
36
16
148
150
130
128
144
140
136
134
126
48
132
56
50
156
54
58
40
154
66
52
142
138
64
42
60
46
68
44
62
102
116
108
114
110
104
112
106
84
78
80
70
86
72
90
88
74
91
76
96
98
89
120
94
124
122
100
92
82
48
14
34
10

Fig. 5.

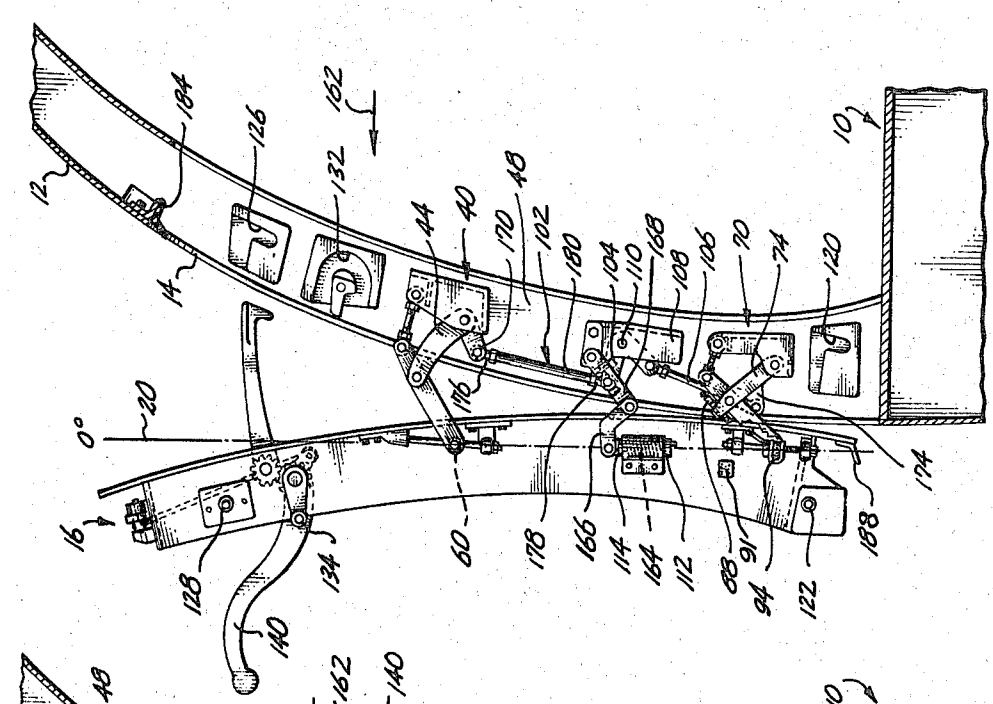

Fig. 8.

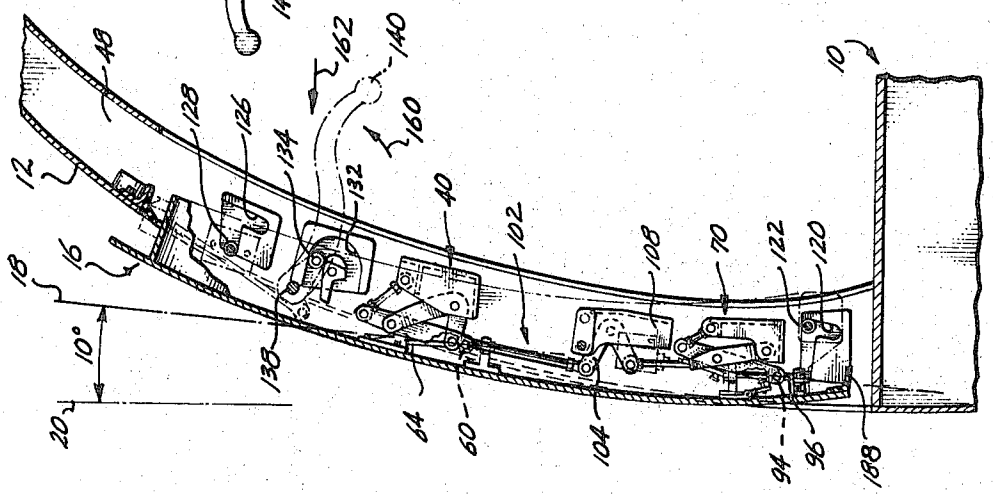

Fig. 7.

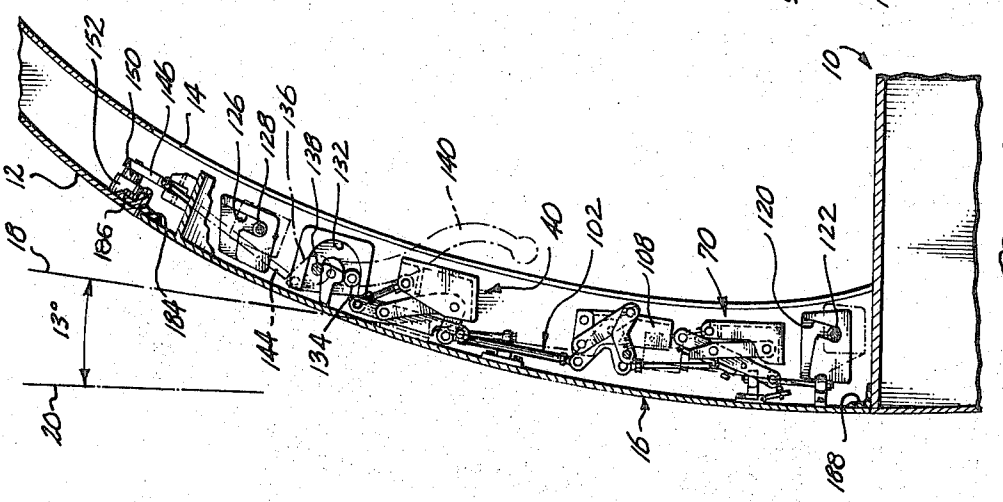

Fig. 6.

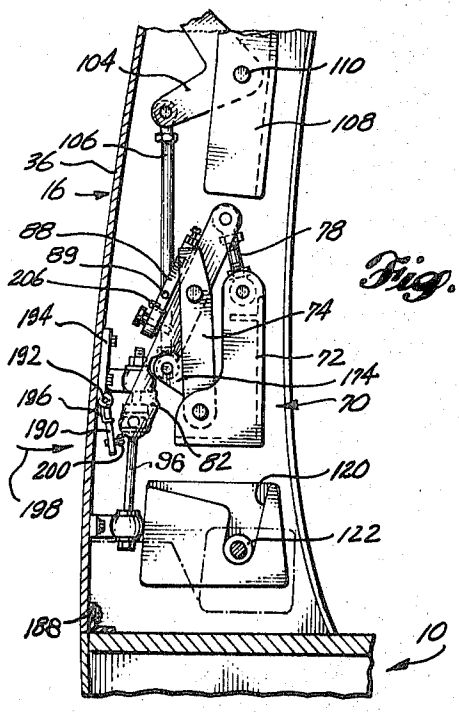

Fig. 9.

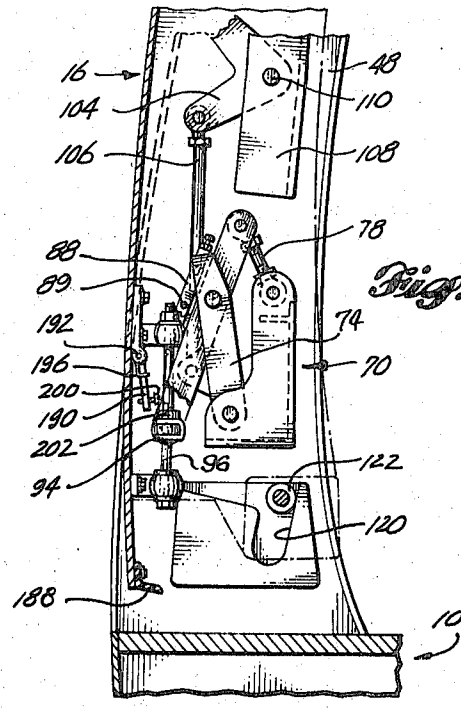

Fig. 10.

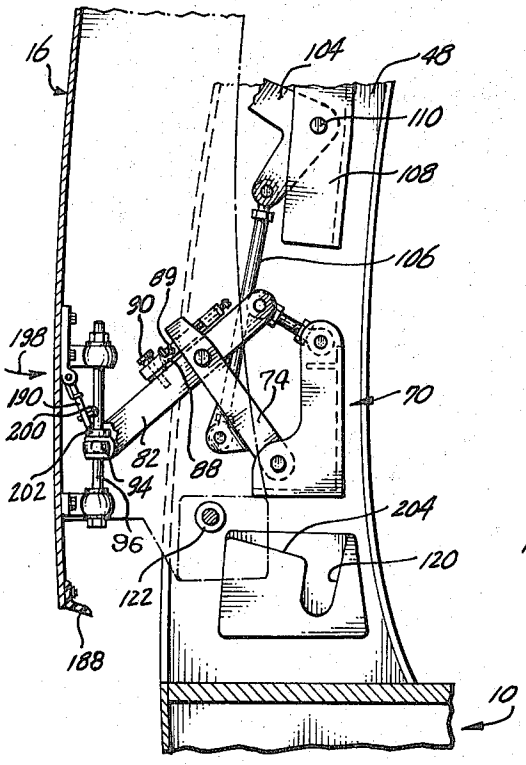

Fig. 11.

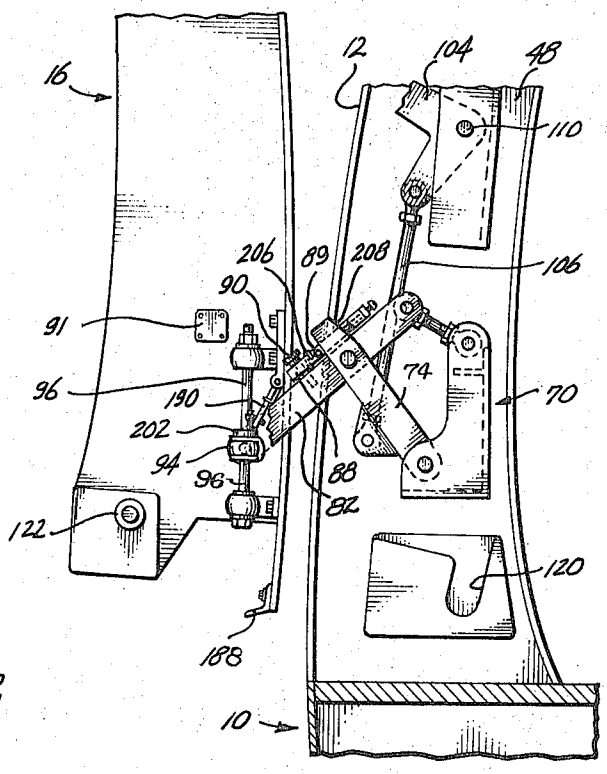

Fig. 12.

AIRCRAFT DOOR WITH MOVING HINGE LINE

BACKGROUND OF THE INVENTION

The present invention relates to door structures and more particularly to an aircraft door having a movable hinge line.

Prior doors of the type utilized for ingress and egress from a pressurized cabin on commercial aircraft require very expensive, complex mechanisms for opening and closing. Suitable aircraft doors of the type in present use normally must open outwardly from the airframe since space within the cabin interior is at a premium. Furthermore, passenger aircraft doors have been of the type which must seat in or seal with the door opening or door frame from the inside (plug type door) to prevent blowout of the door from internal cabin pressure at altitude.

One suitable door of the prior art is disclosed in the U. S. Pat. No. 3,051,280 to Bergman et al. This door closes with outward movement to function as a plug type door. This door is connected to the airframe in the opening with a complex hinge mechanism which allows the door first to swing inwardly in the path of the opening, and at the same time collapses the top and bottom portions of the door so that the door can be fitted through the opening and swung outwardly of the airframe. Thus full access through the cabin opening is provided. This door, however, has certain drawbacks in that the mechanism required to operate the door in this manner is relatively complex and requires very precise machining and mounting. Due to the nature of the hinge assembly little adjustment can be made to the door once it is installed in the aircraft. If the door does not properly seat in the door opening when installed, the door must be removed and the hinge line in the opening must be reworked to conform to the door structure. The manufacturing tolerance levels required to ensure satisfactory mounting of such doors on the airframes are quite high, resulting in high production and assembly costs.

A variety of other doors have been designed as indicated by the prior art in attempts to alleviate some of the manufacturing and assembly tolerance requirements and to reduce the high cost of door assembly. Other doors available in the prior art, however, do not fulfill the requirements of such a door as well as the exemplary door mentioned above.

It is an object of the present invention to provide a lower cost aircraft door which can easily be installed on an airframe and which can be adjusted in several directions on the airframe to accurately fit the door frame and mate with the pressure seals.

It is a further object of the present invention to provide a door which will operatively seal the opening in the airframe as well as the conventional plug type door, but which does not require substantial inward movement during the opening procedure. It is a further object of the present invention to provide an aircraft door which can be easily installed and/or replaced. It is an object of the present invention to provide an aircraft door which can be mounted in an opening in an airframe which is at an angle with the horizontal. It is a further object of the present invention to provide a door which has a moving hinge line from the door frame angle to the vertical, thus requiring no spring assist to open the door outwardly from the airframe.

It is an object of the present invention to provide a door which pressure seals to the airframe on a relatively noncomplex seal plane, i.e., one that conforms generally to the shape of the door rather than having to curve around the hinge mechanism.

It is another object of the invention to prevent inward movement of the door hinge assembly from the vertical positioning of the hinge line when the door is being rotated to an open position.

SUMMARY OF THE INVENTION

The present invention provides in combination a hinge assembly for moving the hinge line of an aircraft door from a first position in blowout preventing seating engagement with a door frame structure mounted in aircraft at an angle with the horizontal plane of the aircraft to a second position wherein the hinge line is substantially vertical for swinging the door open along the said hinge line. The hinge assembly includes a first linkage means for moving a first point on the door outwardly from the door frame from a closed position to an open position. One end of the first linkage means is fixedly connected to the door frame while the other end of the first linkage means is pivotally connected to a first hinge means on the door. A second linkage means moves a second point on the door outwardly from the door frame between a closed position and an open position. Similar to the first linkage means, the second linkage means has one end fixedly connected to the door frame while the second end of the linkage means is pivotally connected to a second hinge means on the door. The first and second hinge means are mounted by said linkage means for movement in a vertical plane. When the door is open, the hinge means are alinged such that the hinge axis of the door is vertically oriented.

BRIEF DESCRIPTION OF THE DRAWINGS

A better understanding of the present invention can be derived from reading the ensuing specification in conjunction with the accompanying drawings wherein:

FIGS. **1** through **4** are pictorial exterior views of the door of the present invention mounted in an airframe opening showing the operational sequence of the door;

FIG. **5** is an isometric view of the door of the present invention in an open position exposing the linkage mechanism;

FIGS. **6** through **8** are detailed cross-sectional views of the entire door showing it, respectively, in a closed position, a partially open position and a fully open position; and

FIGS. **9** through **12** are detailed cross-sectional views of the lower hinge mechanism of the present invention showing the door, respectively, in a closed position, in two intermediate positions and in a fully open position.

DESCRIPTION OF PREFERRED EMBODIMENT

Referring to FIG. **1**, an airframe **10** having an outer wall **12** contains a door opening **14**, for example to a pressurized passenger compartment within the airframe **10**. The door of the present invention is mounted in the opening **14**. In FIG. **1** the door is shown in a fully closed position. The angle of 13° indicated between dot-dash lines **18** and **20** is representative of the angle at which many doors in large commercial aircraft are mounted. This angular mounting is generally caused by the fact that the door open-

ings 14 are located in the upper half of the airframe 10 to fully utilize the space within the airframe. For example, the upper half of the airframe 10 is generally used as passenger compartment space, whereas the lower half of the airframe 10 is utilized for cargo.

10 is generally used as passenger compartment space, whereas the lower half of the airframe 10 is utilized for cargo.

The door 16 of the present invention can of course be mounted for movement to a vertical position indicated by dot-dash line 20 either in the lower half of the fuselage or in the upper half of the fuselage. The present invention, however, is most efficacious for mounting in the upper half of the fuselage for ingress and egress through an opening to the pressurized passenger compartment, since it alleviates the necessity of opening the door upwardly against gravity and thus eliminates the requirement for a spring assist.

As shown in FIG. 2 latch arm 22 has been pulled upwardly. The latch arm 22 actuates mechanism (shown later) which lifts the door 16 upwardly in the direction of arrow 24. This movement disengages the door from stops located in the opening 14. The hinge mechanism, generally designated 26 in these figures, allows the door to move outwardly in the direction of arrows 28 and 30 (FIG. 3). The upper portion of the door 16 moves outwardly in the direction of arrow 28 a greater distance than the lower portion of the door as indicated by arrow 30. As indicated by dot-dash line 20, the hinge line of door 16 is now perpendicular to the horizontal plane of the airframe, i.e., generally vertical.

After the door 16 has been moved to its vertical position, it can be rotated through 180° indicated by arrow 32 in FIG. 4 to a fully open position. The hinge mechanism 26 completely removes the door 16 from the region of ingress and egress through opening 14. Furthermore, the action of the door 16 does not require any substantial inward movement inside the airframe 10. Furthermore, the door can be easily opened without power assist from the inside or outside, since the hinge line of the door has been moved to a vertical position from the angular closed position.

Referring to FIG. 5, an enlarged isometric view of the door and operative latch mechanism is shown. The upper hinge assembly, generally designated 40, includes a fixed link 42 attached to a side structural member 48 of the door frame. The structural member 48 can be part of the structure of airframe 10. A main crank 44 is pivotally connected by pin 46 to the fixed link 42. A control link 50 is also pivotally mounted by pin 52 to the fixed link 42 a spaced distance above the main crank 44. A connecting link 54 is pivotally attached to control link 50 by pivot pin 56 and to main crank 44 by pivot pin 58. Connecting link 54 is also pivotally connected to bearing 60 by pivot pin 62. Bearing 60 is mounted so that hinge rod 64 is rotatable within bearing 60 and so that it is also vertically slidable therein. Hinge rod 64 is attached to the door panel 36 by bracket 66 at its upper end and by bracket 68 at its lower end.

The lower hinge assembly, generally designated 70, also includes a fixed link 72 which is mounted to side frame structural member 48. Assembly 70 further includes a main crank 74 pivotally attached by pivot pin 76 to fixed link 72. Control link 78 is also pivotally connected to fixed link 72 by pivot pin 80. Connecting link 82 is pivotally connected at its one end to control link 78 by pivot pin 84 and to main crank 74 by pivot pin 86. When the door is in the open position, latch member 88 engages an extension of the main crank 74 to prevent backward movement of the door during the time that it is in the open or partially open position as shown in FIG. 5. Latch member 88 is pivotally mounted on connecting link 82 by pivot pin 90. Connecting link 82 is pivotally connected at its other end by pivot pin 92 to a bearing 94. The bearing 94 is mounted for vertical sliding movement and rotational movement on hinge rod 96 which in turn is mounted on door panel 36 by brackets 98 and 100. When the door is rotated about the hinge rods 64 and 96 to a vertical but closed position the pin 89 on latch member 88 engages plate 91 to disengage latch 88 from the main crank 74. Thus the lower hinge assembly 70 can move about its various pivot points to draw the door into the opening 14.

The upper hinge assembly 40 is interconnected with the lower hinge assembly 70 by means of a first connecting link 102 attached to bell crank 104 which is in turn attached to connecting link 106. Connecting link 106 is in turn connected to an arm of main crank 74 (not shown in this view). Bell crank 104 is pivotally mounted in a mounting plate 108 by pin 110. A coiled torsion spring mounted within housing 112 and attached to torsion rod 114 is connected by linkage 116 to the mounting plate 108. The spring through coaction with linkage 116 biases the door in the open position shown.

The door 16 is held in a slightly vertically raised position as indicated in FIG. 2 throughout the remaining operational steps as shown in FIGS. 3 and 4. This is accomplished by a mechanism which will be described in detail with respect to the remaining figures. However, it should be noted at this point that a lower guide track 120 is provided for and mounted securely to structural member 48. The follower 122 mounted for rotation on structural member 124 of the door mates with the track 120 as the door is being closed. A similar track 126 is mounted to the upper portion of structural member 48 on the door frame. Similarly a follower 128 mounted for rotation on structural member 130 of the door mates with the track 126 as the door is being closed. Likewise a cam track 132 is mounted on structural member 48 of the door frame. A roller 134, mounted on crank 136, is in turn securely mounted to torque tube 138. As the door is being closed the roller 134 mates with the upper portion of the track 132. As the followers 128 and 122 mate with the downwardly directed portion of tracks 126 and 120, respectively, the crank 136 is rotated by actuating lever arm 140 connected to torque tube 138. Thus the roller 134 traverses the inward portion of cam track 132, pulling the door inwardly. As the roller 134 traverses the inward and lower portion of cam track 132, the door is pulled inwardly and downwardly. The followers 122 and 128 simultaneously engage first the outwardly directed portions of the tracks 120 and 126 and secondly the downwardly directed portions of tracks 126 and 120. Thus the door is securely affixed to and aligned with the door opening 14. This operation will be explained in greater detail in relation to later figures.

Another crank member 142 is also securely attached to torque tube 138. A connecting link 144 is pivotally connected between crank 142 and arm 146. Arm 146 is pivotally connected to bracket 148, which is in turn connected to the door structure. When the door is in a closed position it will be seen that the coaction of crank 142, connecting link 144 and arm 146 will cause

the arm 146 to rise to a vertical position. In the vertical position a mating surface 150 on arm 146 will mate with a stop 152 (not shown in figure but shown in FIG. 6) provided on the interior side of wall 12.

It also should be noted at this point that the mirror image duplicates of guide tracks 120 and 126 and of cam track 132 are mounted on an opposing side structure, similar to 48, on the opposite side of the opening 14. Rollers and followers similar to 122, 128 and 134 also are appropriately positioned on the other side of the door 16. For example, crank 154 is connected to the opposite end of torque tube 138 from crank 136. Roller 156 mates with the mirror image of cam track 132 mounted on the opposing side of the door frame.

Referring now to FIG. 6 a cross-sectional view of the door assembly taken along the left-hand edge thereof is shown. The door 16 is shown in a closed position within the opening 14. As can be seen the followers 122 and 128 engage the lower portions of tracks 120 and 126. The cam roller 134 is positioned in the lower forward portion of the cam track 132. The torque tube 138 is shown in cross section while lever arm 140 is shown in ghost outline. The upper hinge assembly 40 and the lower hinge assembly 70 are shown in their retracted positions.

As shown in FIG. 7, the lever arm 140 connected to torque tube 138 has been rotated upwardly in the direction of arrow 160. This, of course, will cause torque tube 138 to be rotated in the same manner. The roller 134 has traversed the upwardly directed portion of cam track 132 thus causing the door to rise upwardly out of the lower portion of guide tracks 120 and 126. The door is allowed to move upwardly on the hinge linkages 40 and 70 via the respective sliding bearings 60 and 94 which are slidably mounted on hinge rods 64 and 96. As shown, the door has been partially translated outwardly along its moving hinge line.

As the door is pushed further outwardly in the direction of arrow 162, FIG. 8, the hinge linkage mechanisms 40 and 70 are extended to the full open position. It will be noted that the hinge axis of the bearings 60 and 94 are now vertically aligned along dash-dot line 20. Thus the door assembly 16 can be rotated about the hinge axis (line 20) to the full open position as shown in FIG. 8.

The coil spring 164 within housing 112 is wound in torsion and connected to torsion rod 114. Torsion rod 114 is in turn connected by links 166 and 168 to the mounting plate 108 connected to structural member 48 on the door frame. The coil spring 164 is wound in torsion such that the door 16 is biased in the open position shown in FIG. 8. When the door is closed it can be seen in FIG. 6 that the links 166 and 168 will fold along the side of plate 108 in a retracted position.

The linkage connecting the hinge assemblies 40 and 70 is better seen in this view. It includes connecting link 102 connected to a second arm 170 of main crank 44. Connecting link 102 is also pivotally connected to bell crank 104 which in turn is pivotally mounted by pivot pin 110 on plate 108. The other arm of bell crank 104 is pivotally connected to connecting link 106 which is in turn pivotally connected at its other end to a second arm 174 of main crank 74 of the lower hinge assembly 70.

Connecting link 102, and if desired connecting link 106, includes a right-hand threaded upper portion 176 and a lower left-hand threaded portion 178. These two portions threadably engage a central portion 180 of the connecting link 102. When the central portion 180 of connecting link 102 is rotated in one direction the total length of the connecting link 102 will be increased. This will cause the main link 44 to move upwardly and thus bring the upper portion of door 16 toward the opening 14 in the airframe wall 12. Likewise when the central portion 180 of link 102 is rotated in the opposite direction the total length of connecting link 102 is decreased. When the length is decreased the connecting link 44 will be rotated downwardly, thus increasing the distance from the top portion of door 16 to the opening 14 in the airframe 12. Thus angular adjustment is provided for the door 16 by the present invention. Through these adjustments the door can be positioned for proper alignment with guide tracks 120 and 126 and can be properly registered in the opening 14 at any time, not only at the time of initial installation but when any future adjustment is required.

As shown in FIG. 6, it will be noted at this time that the portions of guide tracks 120 and 126 (into which the guide followers 122 and 128 are positioned when the door is in a closed position) are angled slightly backwardly from the rest position of the followers 120 and 128. This angle, for example on the order of 3° from the pressure plane of the door, provides a positive lock for the door preventing blowout of the door by internal cabin pressure. The pressure plane can be defined as an imaginary plane from upper edge of opening 14 to the lower edge of opening 14 against which internal cabin pressures act in a normal direction. In addition to this feature of the invention, a top latch member is provided, including arm 146, mating surface 150 and stop 152 mounted on the exterior skin of wall 12. The mating surface 150 in coation with stop 152 prevents both upward and outer movement of the door. This mechanism thus provides a positive latching for the door once it is in the closed position and the lever arm 140 brought to its closed position.

A seal member 184 is shown at the upper portion of the opening 14 attached to bracket 186 in turn attached to the outer skin of wall 12. Seal 184 runs along the top of the opening 14 as well as along the sides thereof. A similar seal 188 is shown at the bottom of the door 16. Seal 188 extends along the bottom of the door 16. A suitable seal transfer surface is provided at the lower corners of the door 16 where the seals 184 and 188 meet. Thus seals 184 and 188 surround the periphery of the opening 14 to provide air tight seal between the passenger compartment and the exterior of the airframe 10.

Referring now to FIGS. 9 through 12, the lower hinge assembly 70 is shown in enlarged detail. In FIG. 9 the door 16 is shown in a completely closed position, thus follower 122 rests at the bottom of track 120. A stop 190 is pivotally attached by pivot pin 192 to bracket 194 on the door panel 36. A small spring 196 biases the stop 190 in the direction of arrow 198. However, the stop 190 is prevented from moving in the direction of arrow 198 by adjustable pin 200 which engages a surface of connecting link 82 of hinge assembly 70.

As shown in FIG. 10, as the door is moved upwardly the hinge linkage 70 remains substantially stationary. The stop 190 rises with the door as bearing 94 moves upwardly on hinge rod 96. The bottom end of stop 190 rises above a thrust bearing 202 attached to the top of bearing 94. As the door moves outwardly as in FIG. 11 and follower 122 leaves the upper portion 204 of the guide track 120 and simultaneously pin 200 disengages

from the side of connecting link **82**, thus allowing the stop **190** to move in the direction of arrow **198** onto thrust bearing **202**. As the follower **122** leaves the top portion **204** of guide track **120**, the entire weight of the door is transmitted through stop **190** to thrust bearing **202** and thus to the bearing **94** and connecting linkage **82**. The door **16** is held in its raised position by the stop **190** for the traverse out to a position where the hinge axis is vertically positioned.

As the door is swung **180°** to an open position as shown in FIG. **12** the thrust bearing **202** remains stationary but allows the door to rotate about bearing **94** (and its upper hinge assembly counterpart bearing **60**). When the door **16** is returned to a closed position, the opposite procedure occurs. As shown in FIG. **11**, when follower **122** begins to engage the upper portion **204** of the guide track **120**, stop **190** is pushed backwardly by contact with connecting link **82**. Thus the weight of the door is transferred to follower **122** and the upper portion **204** of track **120**. Likewise, the door is allowed to drop into the lower portion of track **120** without interference from stop **190**.

When the door **16** is in an unrotated position, as shown in FIGS. **9** through **11**, the pin **89** on latch member **88** engages the plate **91** (FIGS. **5** and **12**) on a structural member of the door **16**. Latch member **88** is likewise biased by a small spring **206** in a direction toward the viewer in FIG. **9**. When the door is swung open as shown in FIG. **12**, pin **89** disengages from the plate **91**. This allows the latch member **88** to pivot in the direction of the viewer to lockably engage the inward side **208** of main crank **74** of lower hinge assembly **70**. Thus when the door is in the rotational open position as shown in FIG. **12** the lower hinge linkage assembly **70** cannot retract to a closed position, preventing the door **16** from being pushed inwardly against the outer skin **12** of the airframe **10**. When the door is closed, plate **91** again engages the pin **89** to release the latch member **88** from the back surface **208** of main link **74**. Thus as the door is pulled inwardly hinge mechanism **70** can return to a retracted position.

The present invention has been described in relation to a preferred embodiment. It is to be understood that those of ordinary skill in the art can make various changes, alterations and substitutions of equivalents without altering the original concepts of the invention. It is intended that the invention be limited only by the definition contained in the appended claims.

What is claimed is:

1. A hinge assembly for a door for mounting in an opening in an airframe comprising:

first and second hinge linkage means for connecting said door to said airframe, each of said hinge linkage means comprising a fixed link having means thereon for attachment to said airframe, a main crank pivotally connected to said fixed link, a control crank pivotally connected to said fixed link, and a connecting link pivotally connected to said main crank and to said control crank, one end of said connecting link extending beyond the pivotal connection to said main crank, said pivotal connections of said hinge linkage means being parallel to each other,

a bearing means pivotally attached to said one end of said connecting link on each of said linkage means, each of said bearing means being pivotally attached to said door at a spaced distance from each other to define a hinge axis for said door, said hinge linkage means adapted to move one of said bearing means through a path of greater distance than the path of the other of said bearing means, and

means for securing said door in a closed position in said opening.

2. The assembly of claim **1** further comprising:

means interconnecting a crank on each of said hinge linkages for providing for differential movement between said linkages to move said hinge axis into a substantially vertical position.

3. The assembly of claim **2** wherein said means interconnecting a crank is adjustable to provide variable relative positioning between said hinge linkages.

4. The assembly of claim **2** further comprising:

a pair of bar means mounted substantially vertically on said door when said door is in an open position, said bar means mounted a spaced distance from each other, each of said bearing members slidably and pivotally attached to one of said bar means.

5. The assembly of claim **2** wherein said means for securing said door comprises:

a first pair of track means for mounting on opposing sides of said airframe, each of said track means including a track with an inwardly extending portion and a downwardly extending portion,

said door having a pair of mating follower means mounted on each side thereof capable of engaging the tracks in said track members,

lever means for lifting said door out of the downwardly extending portion of said tracks when said door is in a closed position.

6. The assembly of claim **5** wherein said lever means comprises:

a cam track means having a cam surface mounted on the body frame, said cam surface including a first outwardly extending portion, an upwardly extending portion and a second outwardly extending portion, said portions forming a smooth arcuate cam surface,

a bar rotatably mounted horizontally in said door, and hand manipulable means attached thereto for rotating said bar, cam follower means including a crank attached to said bar and a cam follower on one end thereof for mating with said cam track means said cam follower means holding said door in a down and closed position when engaging said first outwardly extending portion of said cam track means, said cam follower means lifting said door out of the downwardly extending portion of said first track means when engaging said upwardly and second outwardly extending portions of said cam track means.

7. The assembly of claim **6** further comprising:

stop means on said door engaging at least one of said bearings for preventing downward movement of said door as it disengages upwardly from said first track means,

means for disengaging said stop means when said mating follower means engages said first track means.

8. The assembly of claim **5** further comprising:

a second pair of track means mounted on opposing sides of said door frame, said second pair of track means similar to said first pair, said second pair mounted near the upper sides of said frame, said

first pair mounted near the lower sides of said frame.

9. The assembly of claim 2 further comprising:

spring means for biasing said door toward a first position about the pivotal axis on said bearing members.

10. The assembly of claim 6 further comprising:

a stop mounted on the lintel of said frame,

means actuated by said bar for engaging said stop when said door is in a closed position and for disengaging said stop when said cam follower means is actuated.

11. The assembly of claim 2 wherein said main crank on each of said hinge linkages comprises a bell crank, one arm of said bell crank being pivotally attached to said connecting link, and wherein said means interconnecting a crank on each of said hinge linkages comprises:

a first interconnecting link pivotally attached to each of the free ends of said main bell cranks, the ends of said interconnecting link pivotally connected to the arms of a third bell crank, the primary axis of the third bell crank being pivotally attached to said door frame at a position fixed relative to the fixed links on each of said hinge linkage means.

12. In combination, a hinge assembly for moving the hinge line of an aircraft door from a first position in blowout preventing seating engagement with a door frame structure mounted in an aircraft at an angle with the horizontal plane of the aircraft to a second position wherein the hinge line is substantially vertical for swinging said door open along said hinge line comprising:

first linkage means for moving a first point on said door outwardly from said door frame, said first linkage means movable between a first closed position and a second open position, one end of said first linkage means fixedly connected to said door frame, the second end of said linkage means pivotally connected to a first hinge means on said door,

second linkage means for moving a second point on said door outwardly from said door frame, said second linkage means movable between a first and second position, one end of said linkage means fixedly connected to said door frame, the second end of said linkage means pivotally connected to a second hinge means on said door, said first and second hinge means mounted on said door in a vertical plane and spaced from each other.

13. The combination of claim 12 further comprising:

means interconnecting said first and second linkage means for providing differential outward movement between said first and second linkage means.

14. The combination of claim 13 wherein said first and second hinge means mounted for sliding movement on said door, the combination further comprising:

guide means mounted on said door frame and guided means mounted on said door, said guide and guided means coacting to guide said door from a closed position to a vertically displaced position, said linkage means adapted to follow said door to said vertically displaced position,

stop means coacting with said linkage means for holding said door in said vertically displaced position as said door moves from said vertically displaced position to said second position.

15. The combination of claim 14 further comprising:

means acting when said door is in said second position to bias said door toward an open position.

16. The combination of claim 15 further comprising:

hand actuatable means connected to said door and coacting with means mounted on said door frame to lift said door from said first position to said vertically displaced position.

17. The combination of claim 15 further comprising:

lock means responsive to said hand actuatable means for engagement and disengagement for securing said door in said first position in said door frame.

18. The combination of claim 14 further comprising:

means associated with said door and at least one of said hinge means for preventing inward movement of said hinge means when said door is in said second position and is in a rotational position on said hinge axis.

* * * * *