US00D603659S

(12) United States Design Patent

Jalet

(10) Patent No.: US D603,659 S
(45) Date of Patent: ** Nov. 10, 2009

(54) **KITCHEN UTENSIL HOLDER**

(75) Inventor: **Vincent Jalet**, Brussels (BE)

(73) Assignee: **Dart Industries Inc.**, Orlando, FL (US)

(**) Term: **14 Years**

(21) Appl. No.: **29/308,891**

(22) Filed: **Jul. 14, 2008**

(51) **LOC (9) Cl.** **07-06**
(52) **U.S. Cl.** **D7/637**
(58) **Field of Classification Search** D7/601, D7/600.1–600.4, 701–708, 619.1, 637–641; D19/77, 65, 75, 85; D6/457, 476; 211/69.1–69.9, 211/70.6, 70.7
See application file for complete search history.

(56) **References Cited**

U.S. PATENT DOCUMENTS

226,645	A		4/1880	Albaugh	
1,226,993	A		5/1917	Perkins	
D131,453	S		8/1942	Avila	
4,305,511	A		12/1981	Denholtz	
D279,950	S	*	8/1985	Wan	D7/640
4,534,474	A		8/1985	Ng	
D287,175	S		12/1986	Gecchelin	
D304,512	S		11/1989	Byers et al.	
D342,281	S	*	12/1993	Lin	D19/77
5,275,094	A		1/1994	Naft	
5,361,915	A	*	11/1994	Cohen et al.	211/70.7
D363,574	S		10/1995	Laib	
5,551,591	A		9/1996	Laib	
5,590,804	A		1/1997	Crum et al.	
D382,998	S		9/1997	Conigliaro	
5,669,498	A		9/1997	Fierek et al.	
D395,801	S		7/1998	Miller	
D402,777	S		12/1998	Miller	
D418,947	S	*	1/2000	Greiner	D28/73
D424,885	S	*	5/2000	Joergensen	D7/640
D486,184	S	*	2/2004	Leithaeuser	D19/77
6,942,109	B2		9/2005	Aros et al.	
7,044,292	B2		5/2006	Nall	
7,121,415	B1		10/2006	Vizcarra et al.	
D532,570	S		11/2006	Vizcarra et al.	
2008/0054003	A1		3/2008	Curtin	

* cited by examiner

Primary Examiner—Terry A Wallace
(74) *Attorney, Agent, or Firm*—John A. Doninger

(57) **CLAIM**

The ornamental design for a kitchen utensil holder, as shown and described.

DESCRIPTION

FIG. **1** is a top, side and front perspective view of a kitchen utensil holder showing my new design;

FIG. **2** is a front elevation view, the rear elevation being a mirror image thereof;

FIG. **3** is a right side elevation view thereof;

FIG. **4** is a left side elevation view;

FIG. **5** is a top plan view thereof;

FIG. **6** is a bottom plan view thereof; and,

FIG. **7** is a bottom, side and rear perspective view thereof.

1 Claim, 7 Drawing Sheets

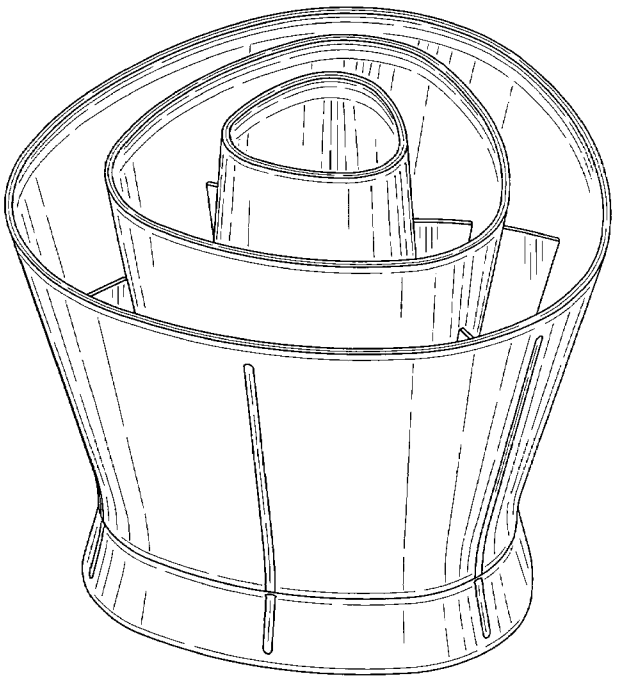

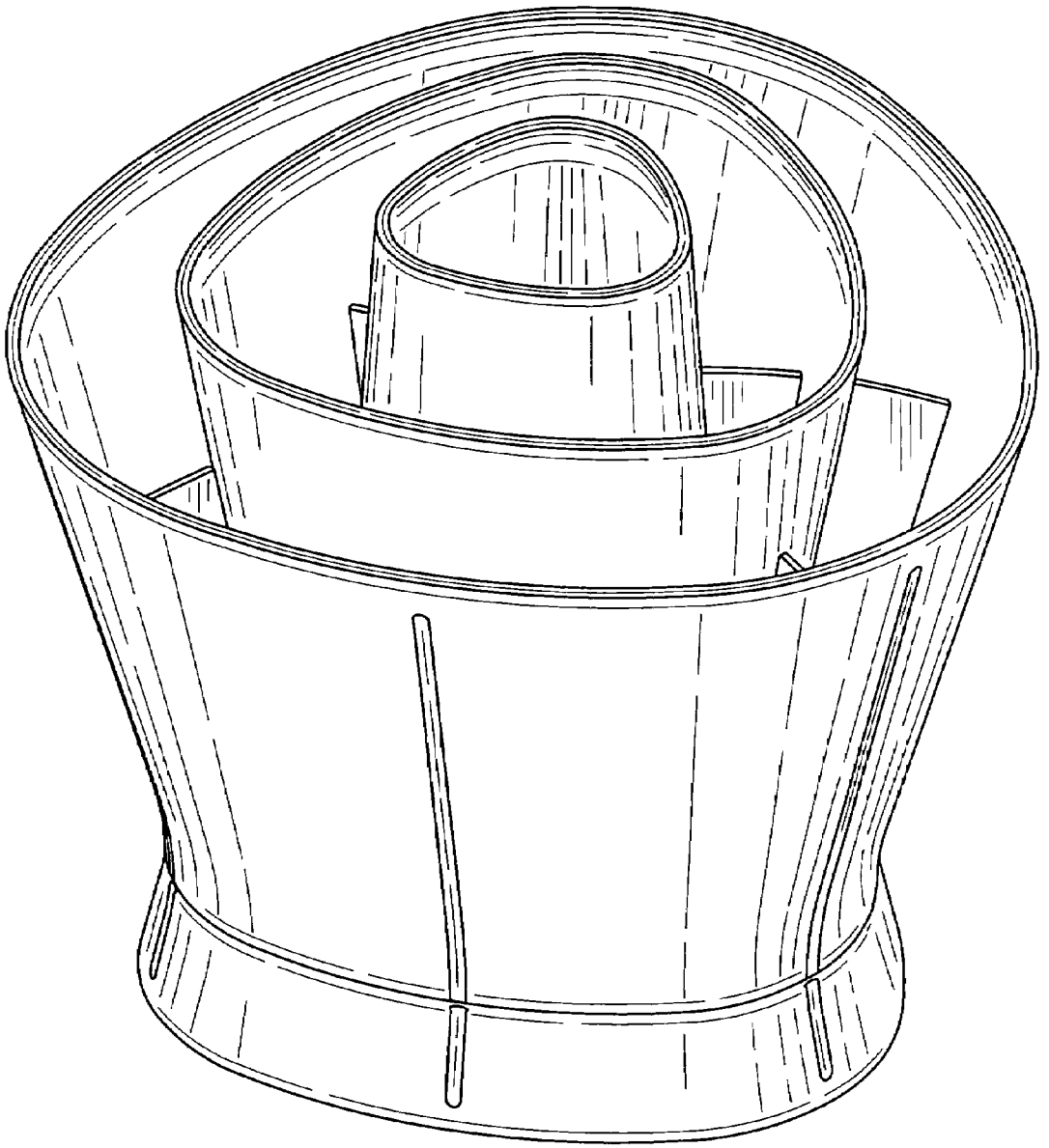

FIG. 1

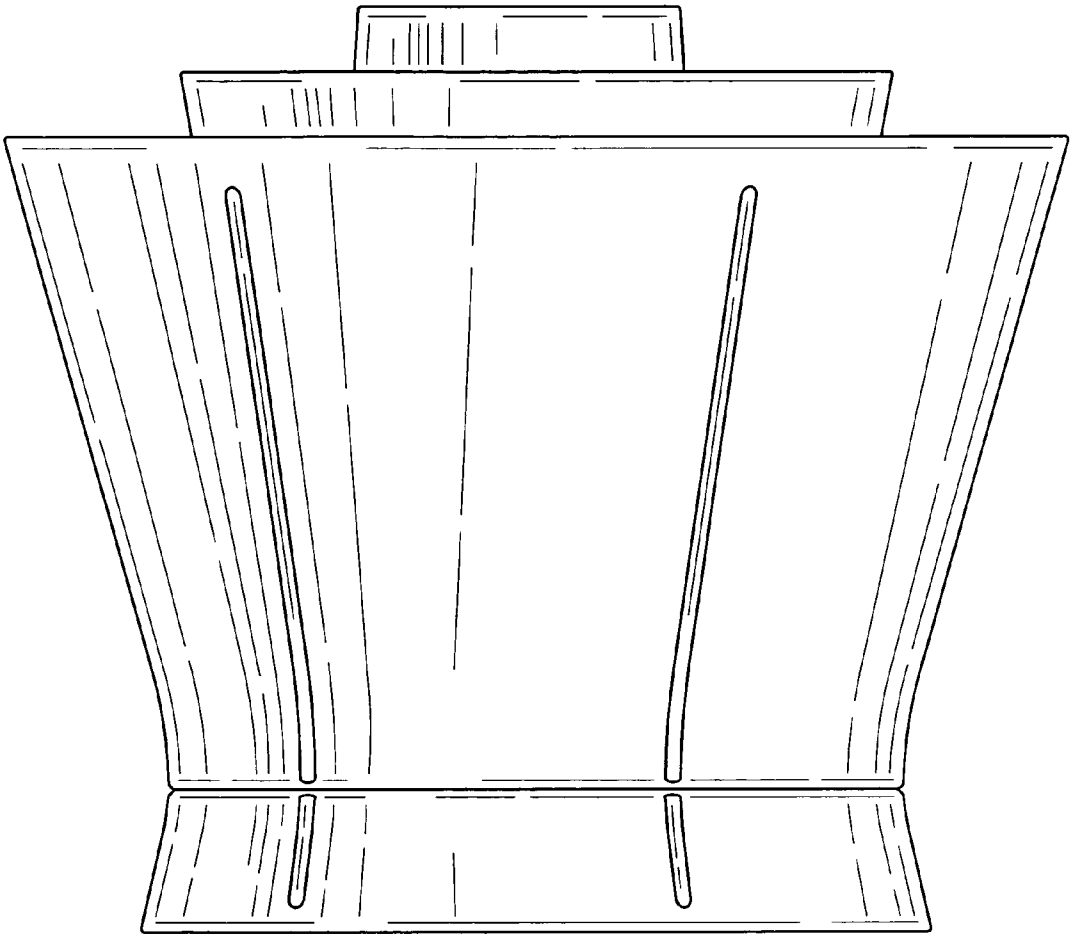

FIG. 2

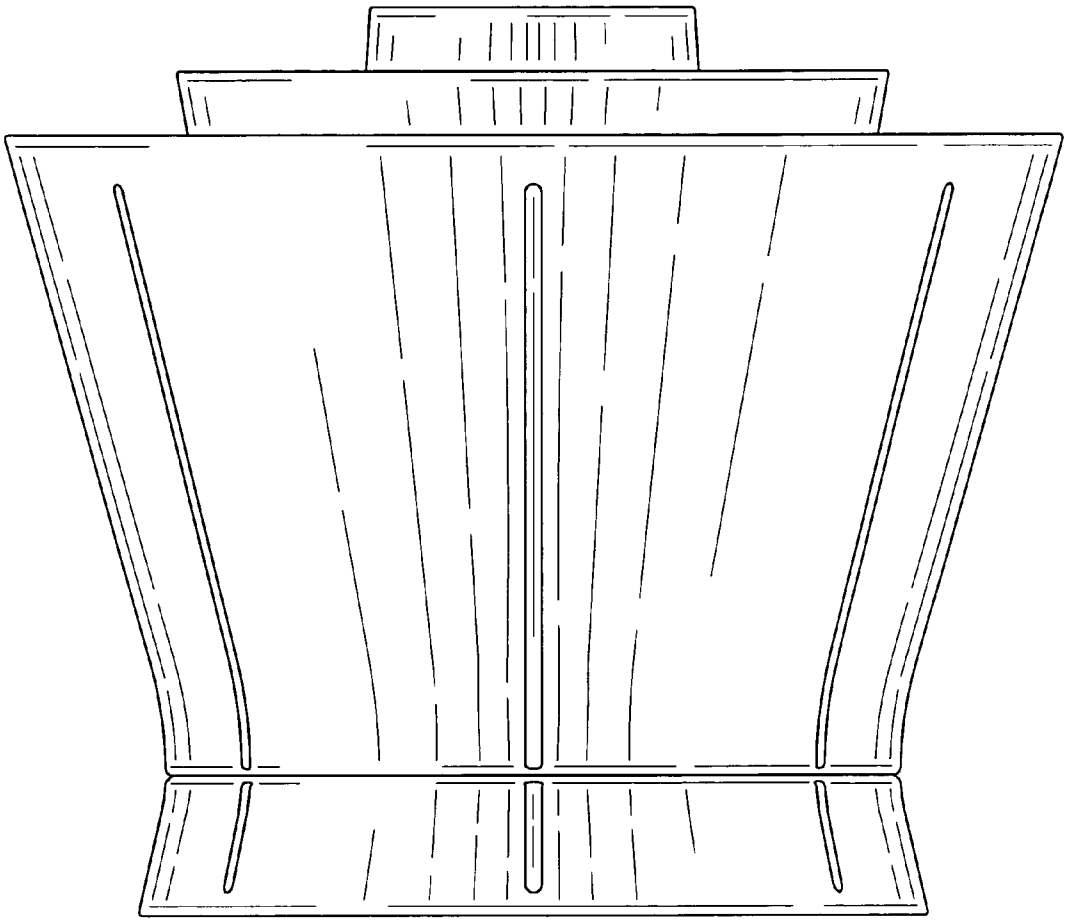

FIG. 3

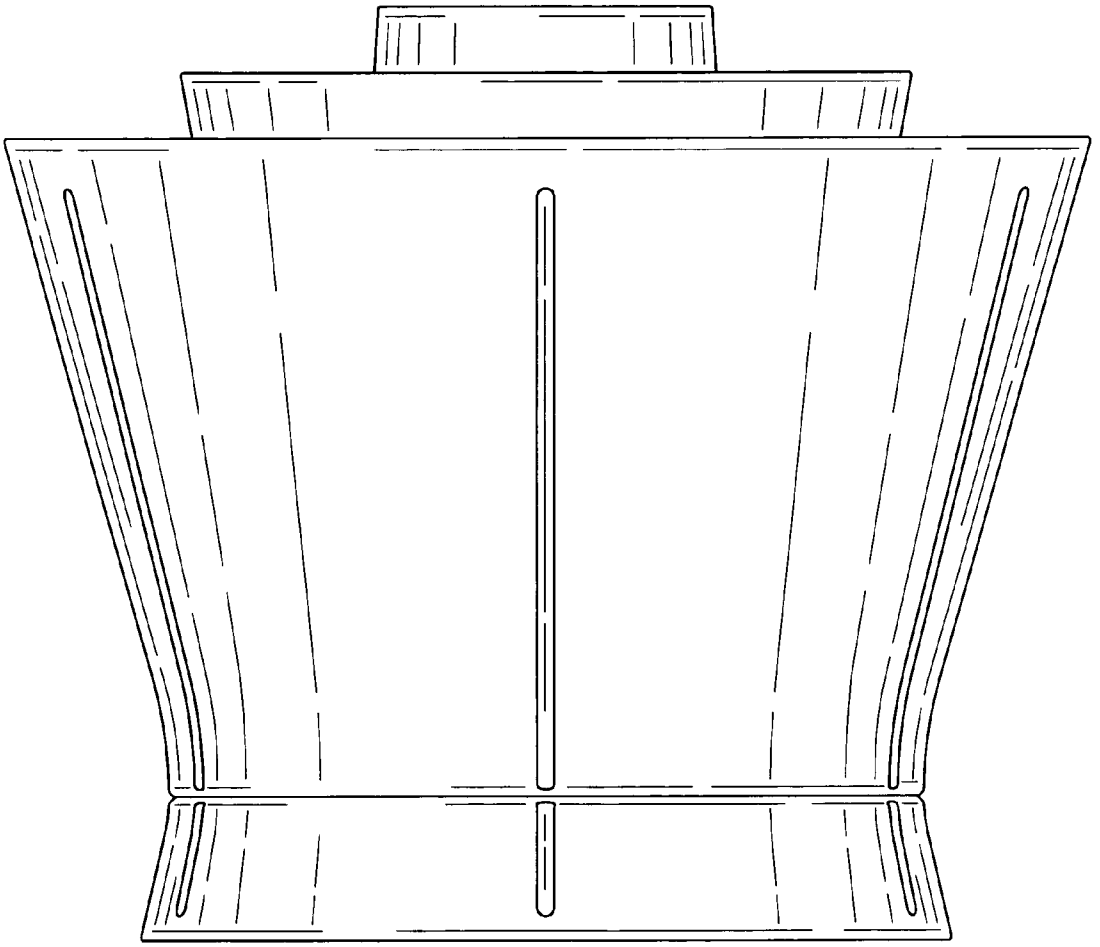

FIG. 4

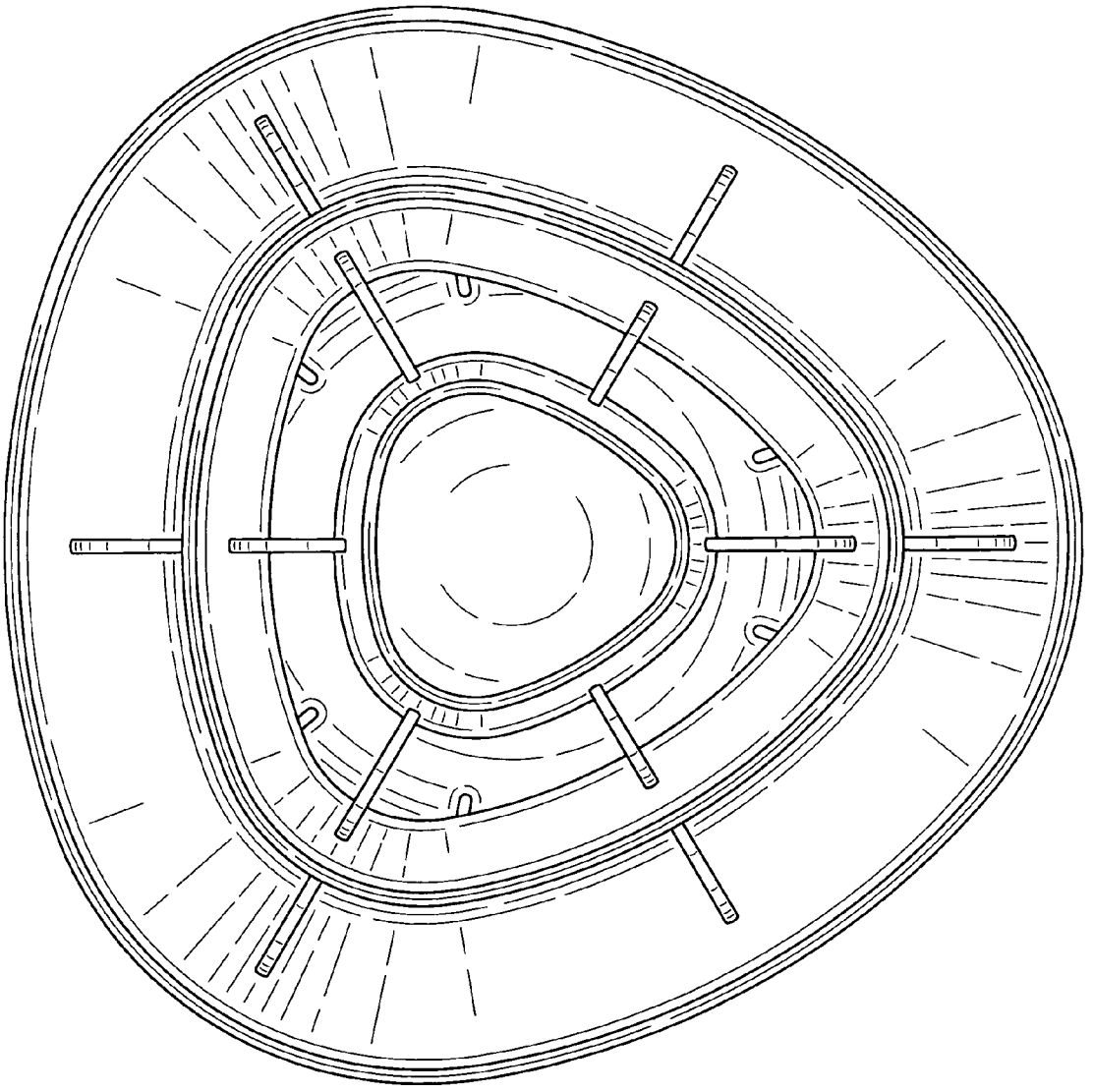

FIG. 5

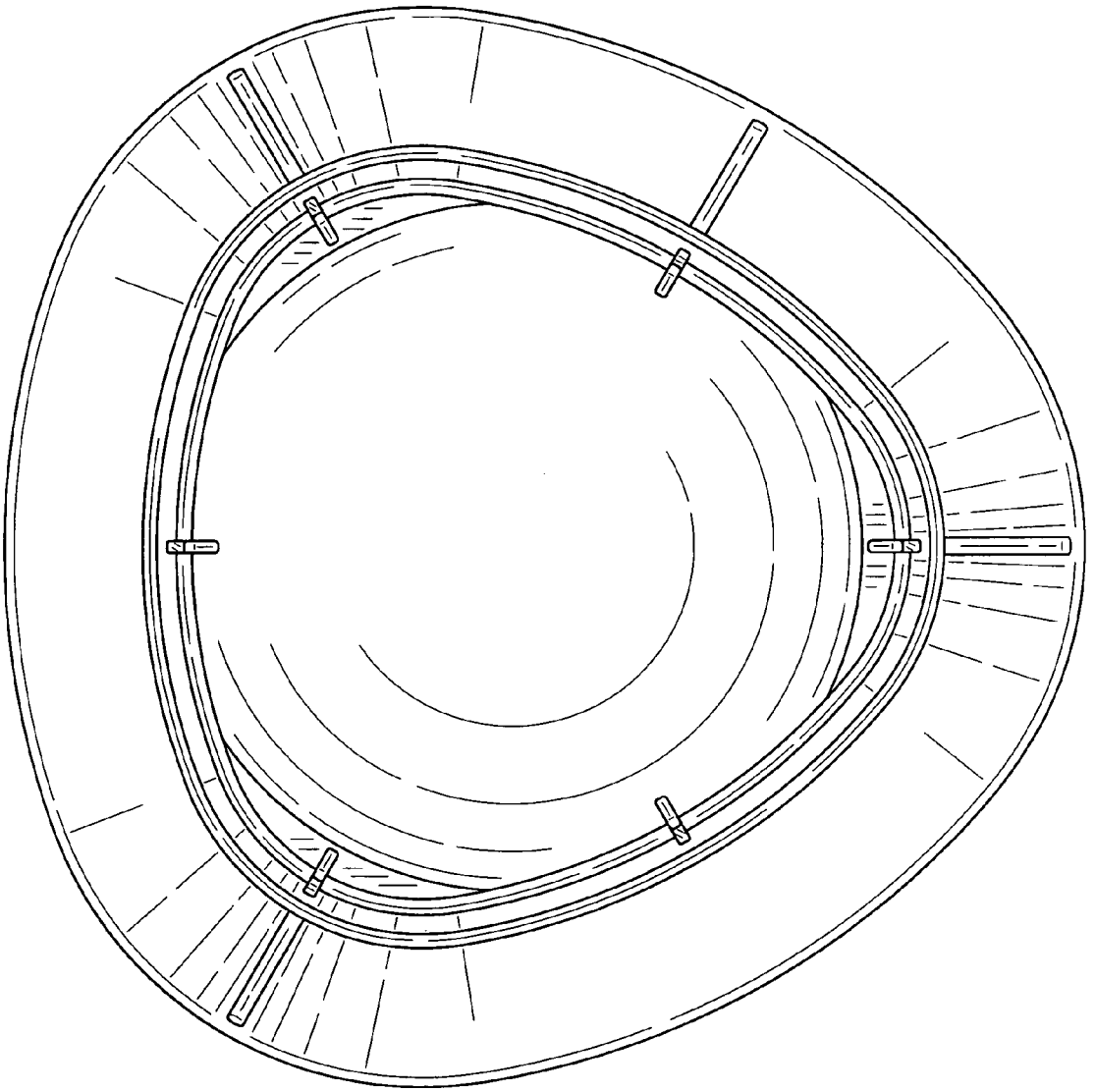

FIG. 6

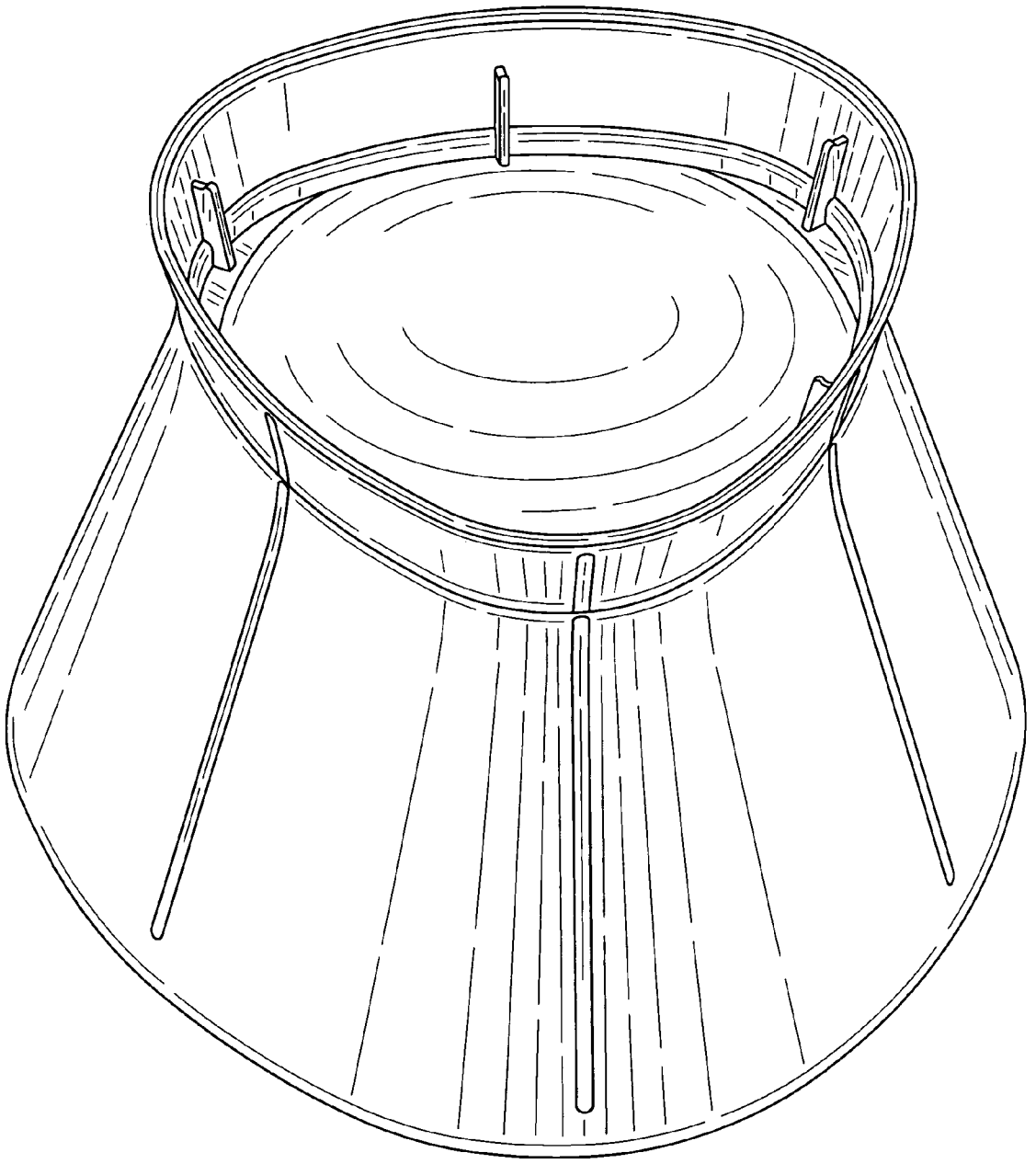

FIG. 7