(No Model.) 2 Sheets—Sheet 1.

G. VALLEY.

DENTAL ENGINE.

No. 590,246. Patented Sept. 21, 1897.

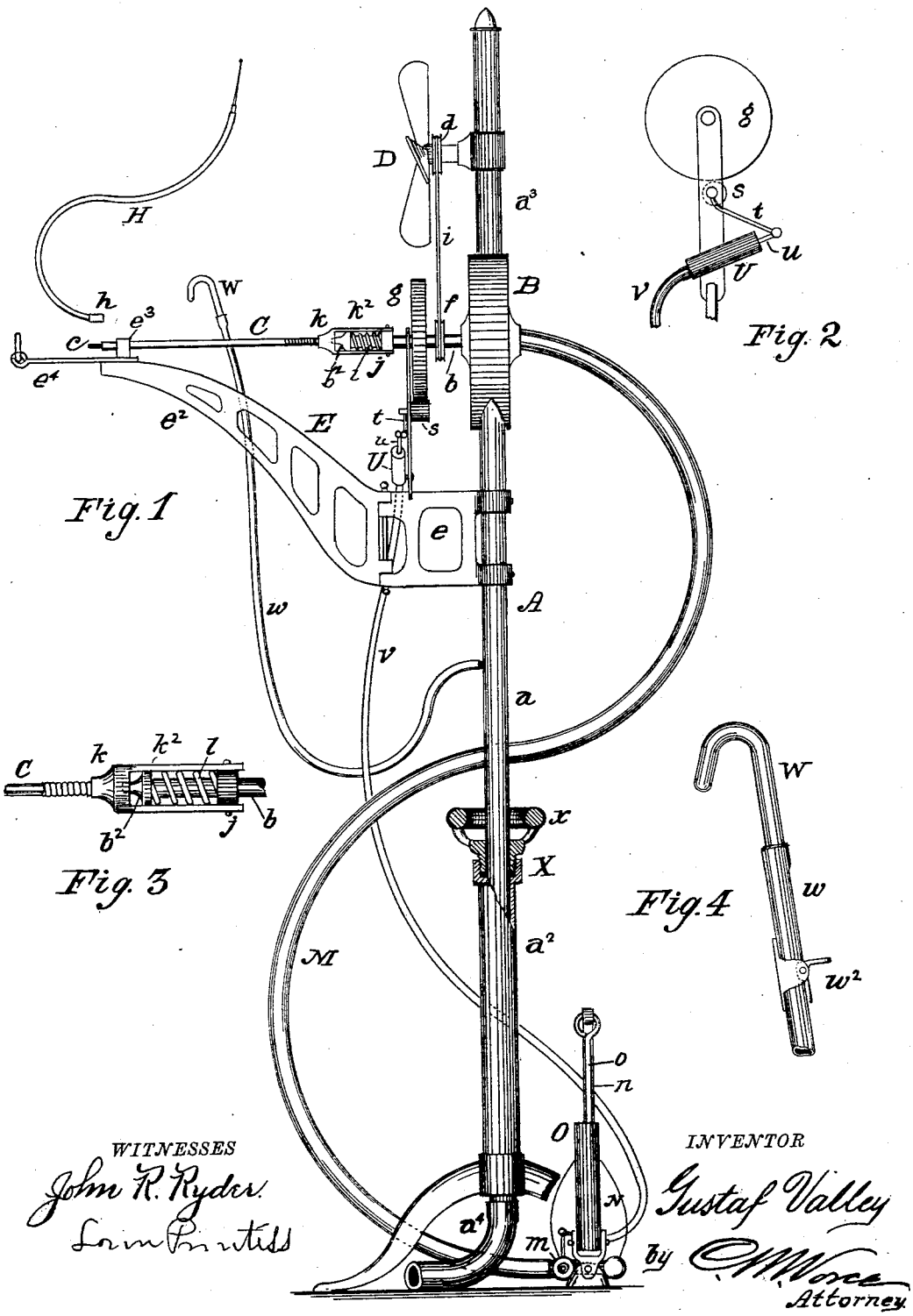

WITNESSES

John R. Ryder.

Lorin Printess

INVENTOR

Gustaf Valley

by C. M. Wore

Attorney

THE NORRIS PETERS CO., PHOTO-LITHO., WASHINGTON, D. C.

(No Model.) 2 Sheets—Sheet 2.

G. VALLEY.

DENTAL ENGINE.

No. 590,246. Patented Sept. 21, 1897.

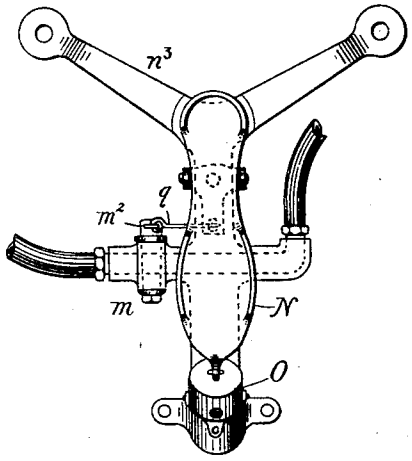

Fig. 5

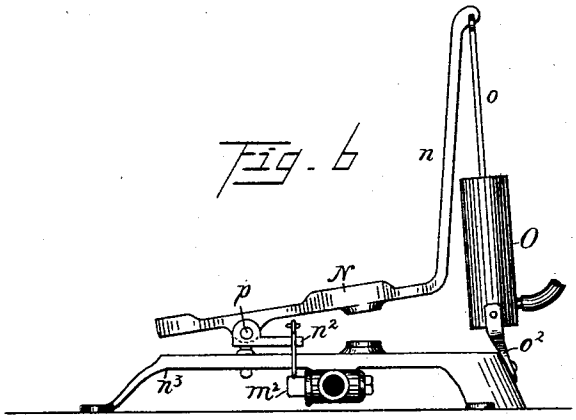

Fig. 6

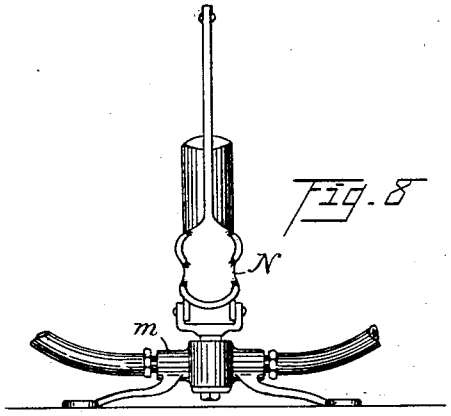

Fig. 8

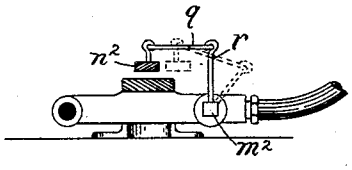

Fig. 7

Witnesses.
John R. Ryder.
Lorin Printiss

Inventor.
Gustaf Valley
by C. M. Vorce
Attorney.

THE NORRIS PETERS CO., PHOTO-LITHO., WASHINGTON, D. C.

UNITED STATES PATENT OFFICE.

GUSTAF VALLEY, OF JOHNSTOWN, PENNSYLVANIA.

DENTAL ENGINE.

SPECIFICATION forming part of Letters Patent No. 590,246, dated September 21, 1897.

Application filed March 17, 1896. Serial No. 583,521. (No model.)

To all whom it may concern:

Be it known that I, GUSTAF VALLEY, a citizen of the United States, residing at Johnstown, in the county of Cambria and State of Pennsylvania, have invented certain new and useful Improvements in Dental Engines; and I do hereby declare the following to be a full, clear, and exact description of the invention, such as will enable others skilled in the art to which it appertains to make and use the same.

The object of my invention is to increase the availability and efficiency of the dental engine in common use by dentists, which object I accomplish by the novel and improved construction, combination, and arrangement of parts, as hereinafter fully described, and pointed out in the claims.

In the drawings, Figure 1 is a view in elevation, broken away in parts, of a dental engine constructed according to my invention. Fig. 2 is a detailed view in elevation of the air-brake at right angles to the view of the same parts in Fig. 1. Fig. 3 is a detached view of the spring connection and joint of the operating-spindle to the main or working shaft *b*. Fig. 4 is a detached view of the saliva-pump and clamp. Fig. 5 is a plan view of the treadle, valve, and air-pump. Fig. 6 is a side view of the same. Fig. 7 is a detail, partly in elevation, partly in section, showing the valve-operating mechanism. Fig. 8 is a detail showing a modification of structure of the valve-operating mechanism of the stop-cock.

The apparatus comprises a hollow standard A, the upper part of which, *a*, telescopes in the lower part a^2 and carries a motor B, whose shaft *b* actuates the operating-spindle C and a fan D, supported on an extension a^3 of the standard above the motor. A bracket-arm E is supported on the standard and for convenience is pivoted intermediate of its length, as seen in Fig. 1, the part *e* being preferably fixed to the standard and the swinging part e^2 provided with a bearing e^3 for the operating-spindle C and with a spring-support e^4 to guard the flexible shaft from kinking. The fan D is actuated by a pulley *d*, by which it is rotated by a belt *i* from a pulley *f* on the shaft *b* of the motor. By slipping the belt *i* on or off the pulley *d* the fan is started or stopped at will. On the motor-shaft *b* is also a wheel *g*, which acts as a fly-wheel, and a freely-sliding collar *j*, to which are pivoted the arms k^2 of the conical base *k* of the operating-spindle C. The end or tip b^2 of shaft *b* is conical or tapering and fits into a corresponding conical or tapering hollow in the base *k*, as seen in Fig. 3, and a spring *l*, interposed between the collar *j* and the tip b^2, tends to draw the base *k* firmly upon the tip b^2 and insures the rotation of the spindle C with the shaft *b*. The spindle C is provided with a screw-tip *c*, on which screws the connecting-nipple *h* of the usual flexible tool-carrying tip H, which is shown detached in Fig. 1.

The motor may be operated by water, steam, or air-pressure, as may be preferred, supplied through the hose or pipe M, connected with any suitable source of supply. The pressure medium used after passing through the motor B descends through the standard A and through a waste-pipe a^4 to any suitable discharge.

At a convenient point in the supply-pipe M is placed a stop-cock *m*, which I prefer to attach to or make integral with the base of a treadle N, by means of which the pressure-supply can be completely controlled by the operator without the use of his hands and the engine can, if need be, be stopped instantly, whether the pressure be cut off or not. To effect this, the treadle N is connected to the plug of the stop-cock *m* in such manner that turning the treadle to one side by a motion of the foot will close the cock. This may be effected by attaching the treadle directly to the plug of the stop-cock, as shown in Fig. 8; but I prefer an arrangement equivalent to that shown in Figs. 5, 6, and 7, in which the treadle is attached to a lever and the latter to the plug of the stop-cock, as it enables the cock to be closed with a less movement of the foot than if connected directly to the plug.

In Fig. 6, N represents the treadle, having a neck or extension *n* and vertically movable on a pivot *p*, by which it is attached to a horizontally-moving lever n^2, pivoted in turn to the base n^3, which rests upon or is secured to the floor. The free extremity of the lever n^2 is connected by a short rod *q* to an arm *r*, rigidly affixed to the plug m^2 of the stop-cock, so that, as seen in Fig. 7, turning the treadle to one side will push upon the arm *r* and close

the cock m, and reversing the movement will open it. By a slight or slow sidewise movement of the foot on the treadle the operator may thus partially or gradually diminish the power and speed of the engine or stop it entirely. To enable the operator, however, to stop the engine instantly, whether the power or pressure be on or off, I provide an air-brake comprising a small cam s, pivoted in close juxtaposition to the wheel g and having attached to its axis an arm t, the extremity of which is pivoted to the piston-rod u of a small air-cylinder U, which communicates by the tube v with an air-pump O, whose piston-rod o is attached flexibly to the prolongation n of the treadle N. By pressing down the treadle sharply the air is forced from pump O to cylinder U, and, as seen in Fig. 2, in forcing out the piston-rod u turns the cam s, which instantly locks the wheel g and prevents its moving. Raising the treadle will obviously retract the piston-rod u and unlock the wheel.

In order that the piston-rod o may operate in any position of the treadle, I pivot the lower end of O in a gimbal o^2, which allows it to oscillate lengthwise of the treadle, and I pivot the gimbal to the base n^3 at right angles, so that as the treadle moves from side to side the pump O moves with it and remains operative in any position.

I prefer to make the pump O larger than cylinder U and to perforate the bottom of O with a small hole, so that an air-cushion is formed in O when the cam s is closed upon the wheel g.

The saliva-pump is composed of a tube W, preferably curved or siphon-shaped and connected by a flexible tube w to the standard A. A spring-clamp w^2 is placed on the tube w, and on applying the tube W to the patient's mouth and opening the clamp w^2 the suction caused by the downward current in the standard A draws up the saliva through the opening in the end of tube W and instantly clears the mouth from any accumulation of saliva.

When not in use, the shape of the tube W adapts it to be hung on any convenient part of the apparatus, and to prevent closing the tube by undue pressure the end is closed and the opening made at one side. (See Fig. 4.)

The extension a^3 of the standard is open to the motor-case and acts as an air-chamber, and a hand-wheel x, which forms a part of the stuffing-box X, by which the two parts of the standard are connected water-tight, serves to lift the device when required and to raise and lower the drill-shaft or engine to convenient height.

What I claim as my invention, and desire to secure by Letters Patent, is—

1. In a dental engine the combination with a motor and an operating-spindle actuated thereby, of a rigid disk rotating therewith, an air-operated brake adapted to engage said disk, and a foot-operated air-pump connected with said air-brake, substantially as described.

2. In a dental engine the combination of a motor, an operating-spindle actuated thereby, a disk rigid with the motor-shaft, a cam pivoted in proximity to said disk, an air-cylinder having its piston-stem connected to said cam, an air-pump connecting with said cylinder, and treadle mechanism to actuate said pump, substantially as described.

3. In a dental engine the combination with a pressure-operated motor and a pressure-supply pipe therefor, of an operating-spindle actuated by said motor, a disk rigid with the motor-shaft, an air-brake adapted to engage said disk, a valve in the pressure-supply pipe, a treadle connected to the valve-stem and adapted to open or close the valve, and an air-pump operated by said treadle and communicating with said air-brake, substantially as described.

4. In a dental engine the combination with a pressure-operated motor and a pressure-supply pipe therefor, of an operating-spindle actuated by said motor, a disk rigid with the motor-shaft, a cam pivoted in proximity to said disk and having a projecting arm, an air-cylinder having its piston-stem connected to the arm on said cam, a valve in the pressure-supply pipe, a treadle connected to said valve-stem and adapted to open or close the valve, and an air-pump actuated by said treadle and having tubular connection to said air-cylinder, whereby the treadle can be used to cut off the pressure or to stop the motor without cutting off the pressure, substantially as described.

5. In a dental engine the combination with a pressure-operated motor and a pressure-supply pipe therefor, of a valve in the pressure-supply pipe, an arm attached to the valve-stem a pivoted treadle, and a link connecting the same with the valve-stem arm, whereby the lateral motion of the treadle will actuate the valve-stem and open or close the valve, substantially as described.

6. In a dental engine the combination with the motor-shaft having an enlarged conical or tapering end, a freely-sliding collar, and a spring between the two, of the operating-spindle having an enlarged base with conical recess to receive the shaft end, and a fork rigid with the spindle-base and pivotally connected to the sliding collar, substantially as described.

7. In a dental engine the combination of a hollow standard, a pressure-operated motor mounted thereon and exhausting therethrough, and a saliva-pump connected to the standard and operated by the exhaust, said pump having a siphon-shaped nozzle closed at the end and having an opening in one side, substantially as described.

8. In a dental engine the combination with the standard, motor and spindle, of a bracket secured to said standard and having a swinging extension, a bearing for the spindle on said extension, and a spring-support projecting from said extension for receiving the

flexible tool-carrying tip, substantially as described.

9. The combination of a pressure-operated motor and a pressure-supply pipe therefor, a valve in the pressure-supply pipe, a treadle connected to the stem of said valve and adapted by its lateral movement to actuate the valve, an air-brake acting to stop the motor, and an air-pump mounted in gimbals and connected to the air-brake and actuated by said treadle, substantially as described.

In testimony whereof I hereto affix my signature in presence of two witnesses.

GUSTAF VALLEY.

Witnesses:
E. O. FISHER,
J. W. OWENS.