Feb. 1, 1966 R. F. HILL ETAL 3,232,717

URANIUM MONOCARBIDE THERMIONIC EMITTERS

Filed May 14, 1962

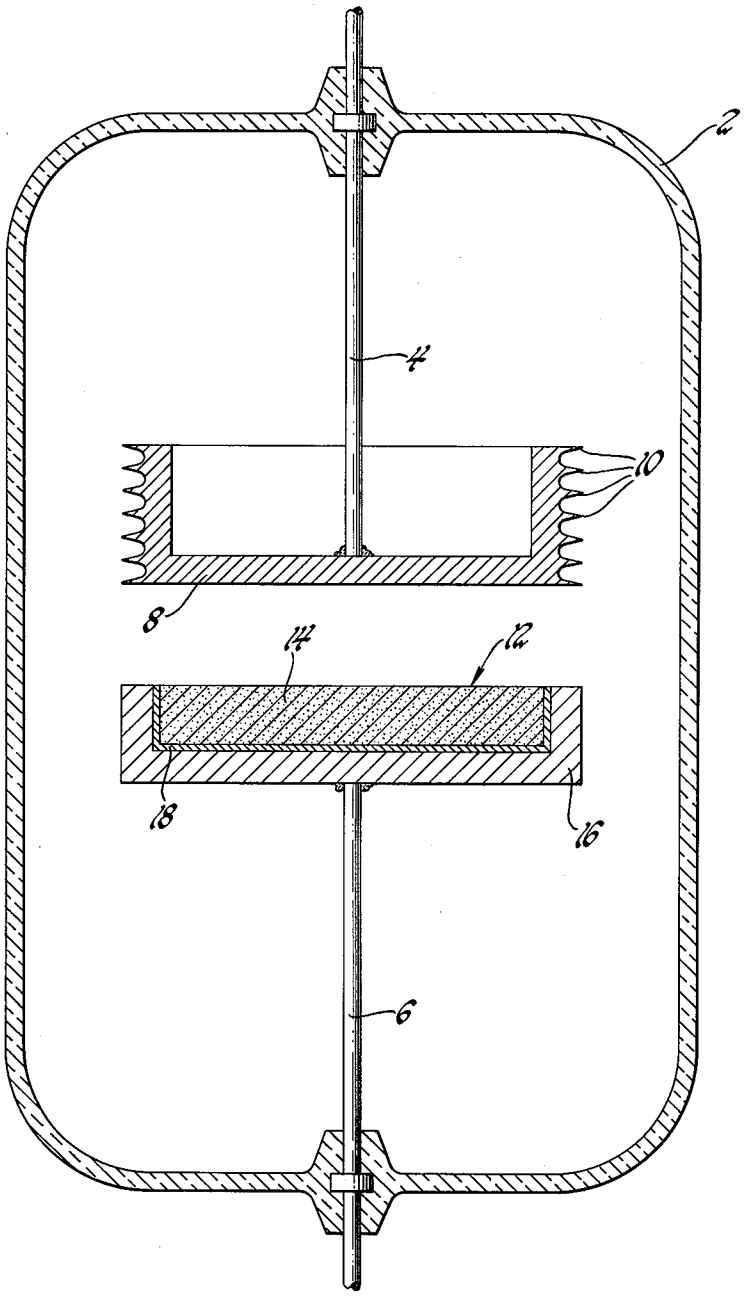

INVENTORS
Robert F. Hill,
BY Stan J. Paprocki &
Donald L. Keller
Paul J. Leising
ATTORNEY

United States Patent Office 3,232,717 Patented Feb. 1, 1966

3,232,717

URANIUM MONOCARBIDE THERMIONIC EMITTERS

Robert F. Hill, Warren, Mich., and Stan J. Paprocki, and Donald L. Keller, Columbus, Ohio, assignors, by direct and mesne assignments, to General Motors Corporation, Detroit, Mich., a corporation of Delaware

Filed May 14, 1962, Ser. No. 194,448
9 Claims. (Cl. 29—182.3)

This invention relates to devices for converting heat energy to electrical energy and, more particularly to an improved electron emitter element for such devices.

In United States patent application Serial No. 802,958, filed March 30, 1959, now Patent No. 3,093,567, in the names of Francis E. Jablonski and Charles B. Leffert and assigned to the assignees of the present invention, there is described and claimed a thermionic converter which comprises a noble gas plasma diode, the electron emitter element of which includes a fissionable material so as to generate the noble gas plasma by fission fragment ionization. Further in accordance with that invention, the mass of the fissionable material in the diode or a combination of such diodes can be made sufficiently large to sustain chain reaction fission and thereby generate the heat for conversion to electrical energy.

The basic requirements for the emitter material for such a device are: It must have the ability to adequately supply electrons at the operating temperature, must be chemically and mechanically stable, must have electrical and thermal conductivity and must have a high surface density of exposed fissionable material.

It is an object of the present invention to provide an improved electron emitter which has this combination of important properties to a marked degree and which is therefore particularly useful in a noble gas plasma diode of the aforementioned type. A further object of the invention is to provide an improved method for making such an electron emitter.

Uranium carbide, by itself, has two of the aforementioned essential qualities needed for the electron emitter, namely, ability to supply electrons and high density of fissionable material. However, by itself it has insufficient mechanical strength. Uranium carbide is, of course, a ceramic and, as is true of most all ceramics, it is particularly susceptible to thermal cracking. In accordance with the present invention, the additional required properties are provided by physically combining certain metals with the uranium carbide to form a cermet. We have found that the choice of metals is extremely limited for the reason that uranium carbide is quite reactive at high temperatures, and it is essential that the metal not undergo interaction with the uranium carbide either during processing or during operation. More specifically, we have found that the two metals which suffice are rhenium and tungsten. Briefly then, the electron emitter of this invention comprises a dense cermet body of uranium carbide and rhenium, tungsten, or rhenium-tungsten alloys, the former being preferred. Further in accordance with the invention, this cermet body is provided with a niobium cladding, a thin layer of the rhenium or tungsten, preferably the latter, being interposed between the cermet body and the cladding in order to prevent diffusion and reaction between the niobium and the uranium carbide during manufacture and operation of the emitter. The cermet body can contain from 10% to 80% by volume uranium carbide, the upper end of this range being preferred particularly where the emitter is for use in a nuclear reactor type thermionic converter wherein the heat is supplied by nuclear fission.

The above and other objects and features of the invention will appear more clearly from the following

detailed description thereof made with reference to the drawing which shows a side view in section of an electron emitter constructed in accordance with the invention and incorporated in a noble gas plasma diode which is shown schematically.

Referring now to the drawing, the thermionic converter comprises a hermetically sealed envelope **2** filled with a noble gas and having two electrical leads **4** and **6** extending therethrough. The top lead **4** connects to an electron collector **8** which has some suitable cooling means associated therewith, such cooling means being illustrated by the plurality of heat radiating fins **10**. The bottom electrical lead **6** is connected to the electron emitter **12** which is in the form of a flat disc with its upper surface in spaced relationship to the bottom flat surface of the collector. Hence, when the noble gas between the emitter and the collector is ionized and the emitter is heated, there is a flow of electrons from the emitter to the collector thereby generating an electrical current, all as described in the aforementioned patent application.

In accordance with the present invention the emitter **12** comprises a dense cermet body **14** of 80% by volume uranium carbide and 20% by volume rhenium with a niobium cladding **16** covering its side and bottom surfaces, a layer of tungsten foil **18** being pressed between the body **14** and the cladding. Further details of the structure of the emitter will be apparent from the following description of the method for its manufacture:

To form the uranium carbide, pure uranium metal in the form of small discs or rods can be employed as a starting material. Prior to melting, the surface of the metal should be carefully cleaned by electropolishing or by a careful wash in dilute nitric acid. Spectroscopic carbon in rod form can be employed as the starting carbon material. The rod is first outgassed by heating to a temperature of about 2000° C. in high vacuum and is then ground to powder form in an inert atmosphere. Carefully controlled quantities of the uranium metal and carbon powder are placed in an arc furnace in a purified argon atmosphere where they are arc-melted together to form a uranium carbide button. A graphite-tipped electrode is used in order to minimize contamination. The composition of the uranium carbide produced will, of course, depend upon the weights of uranium metal and carbon powder in the furnace charge. With 4.8 weight percent carbon, the uranium carbide formed will be predominantly uranium monocarbide; when slightly more than 4.8 weight percent carbon is used, a second phase with composition UC_2 will appear at the grain boundaries within the UC matrix and there will sometimes also appear a third phase, U_2C_3. The precise stoichiometric composition of the uranium carbide is not important to the present invention and hence the term "uranium carbide" as used herein is intended to comprehend both the mono- and di-carbides as well as the intermediates such as U_2C_3.

The uranium carbide is pulverized to fine grain size, on the order of minus 300 mesh, preferably in a dry box since the pulverized uranium carbide is pyrophoric. Next the pulverized uranium carbide is uniformly admixed with rhenium powder, also about minus 300 mesh grain size, in the proportions desired, preferably 80% uranium carbide and 20% rhenium. This mixing of the powders should also be performed in a dry box and for further protection against the pyrophoric nature of the uranium carbide it is desirable that about 1% by weight of a suitable organic material such as Carbowax (polyethylene glycol) be included in the mixture. In addition to coating the grains of uranium carbide and thereby protect against combustion, the Carbowax also serves as a binder for the mixture.

The powder mixture is then cold pressed in a steel die at about 60,000 pounds per square inch to thereby form a green compact having a density of approximately 70% theoretical.

The green compact so formed is inserted snugly into a niobium cup lined with a thin layer of tungsten foil and this assembly is then heated in a vacuum sufficiently to drive out the Carbowax. A niobium lid, preferably also lined with tungsten foil, is then placed over the niobium cup and is bonded to the cup by electron beam welding to effect an hermetic seal. Since the electron beam welding is performed in a vacuum, the interior of the cup is in an evacuated state at the conclusion of this sealing operation. The assembly should preferably be leak-checked after the welding to make certain that it is hermetically sealed.

The resulting niobium encapsulated green compact is placed in an autoclave and is pressure bonded in a helium atmosphere at 10,000 pounds per square inch pressure and 2700° F. This heating and isostatic pressing operation causes the niobium encapsulation to collapse and the green compact to sinter and form a dense cermet body. At the conclusion of the operation the cermet body has a density which is about 99% of theoretical. After removing from the autoclave and then cooling, the top or lid portion of the niobium cladding is sliced away so as to form the structure as shown in the drawing.

As indicated above, both rhenium and tungsten have extremely low chemical reactivity with uranium carbide. Between the two, rhenium is preferable because it has the lowest chemical reactivity; however, it is less desirable because of its higher nuclear cross section. It is because of this that rhenium with its extremely low reactivity is the preferred metal for the cermet, whereas tungsten with its lower nuclear cross section is preferred for the barrier layer between the cermet and the cladding. The somewhat higher reactivity of the tungsten serves to no serious disadvantage where it is used as the barrier layer and the lower cross section outweighs what little disadvantage there is.

It will be understood that while the particulars of the invention have been described specifically with reference to a preferred embodiment thereof, various modifications may be made, all within the full and intended scope of the claims which follow.

We claim:

1. A cermet body useful as an electron emitter in a thermionic device, said body consisting essentially of from 10% to 80% by volume uranium carbide and from 20% to 90% by volume of a metal selected from the group consisting of rhenium, tungsten and rhenium-tungsten alloys.

2. A cermet body useful as an electron emitter in a thermionic device, said body consisting essentially of from 10% to 80% by volume uranium carbide and from 20% to 90% by volume rhenium.

3. A cermet body useful as an electron emitter in a thermionic device, said body containing about 80% by volume uranium carbide and about 20% by volume of a metal selected from the group consisting of rhenium, tungsten and rhenium-tungsten alloys.

4. A cermet body useful as an electron emitter in a thermionic device, said body containing about 80% by volume uranium carbide and about 20% by volume rhenium.

5. An electron emitter for a thermionic device comprising a cermet body consisting essentially of from 10% to 80% by volume uranium carbide and from 20% to 90% by volume metal, a niobium cladding on said cermet body and a thin barrier layer of metal between said body and said cladding, the metal of said barrier layer and of said cermet being selected from the group consisting of rhenium, tungsten and rhenium-tungsten alloys.

6. An electron emitter for a thermionic device comprising a cermet body consisting essential of from 10% to 80% by volume uranium carbide and from 20% to 90% by volume rhenium, a niobium cladding on said cermet body and a thin barrier layer of tungsten between said body and said cladding.

7. An electron emitter for a thermionic device comprising a cermet body containing about 80% by volume uranium carbide and about 20% by volume metal, a niobium cladding on said cermet body and a thin barrier layer of metal between said body and said cladding, the metal of said barrier layer and of said cermet being selected from the group consisting of rhenium, tungsten and rhenium-tungsten alloys.

8. An electron emitter for a thermionic device comprising a cerment body containing about 80% by volume uranium carbide and about 20% by volume rhenium, a niobium cladding on said cermet body and a thin barrier layer of tungsten between said body and said cladding.

9. A cermet body useful as an electron emitter in a thermionic device, said body containing from 10% to 80%, by volume, uranium carbide and the balance substantially a metal selected from the group consisting of rhenium, tungsten and rhenium-tungsten alloys.

References Cited by the Examiner

UNITED STATES PATENTS

2,115,828	5/1938	Prescott	252—505
2,682,511	6/1954	Gronin	252—517
2,863,816	12/1958	Stacy	176—70
2,873,518	2/1959	Schilling et al.	29—420.5
2,928,168	3/1960	Gray	176—91 XR
2,991,601	7/1961	Glatter et al.	
2,993,786	7/1961	Roboff et al.	176—89 XR
3,067,505	12/1962	Schenk	29—420.5
3,126,349	3/1964	Kirchner	252—301.1
3,129,188	4/1964	Sowman et al.	252—301.1

OTHER REFERENCES

Nuclear Fuel Elements by Hausner et al., November 1959, Reinhold Publ. Corp., New York, pp. 197 and 199.

Nucleonics, vol. 19, No. 12, December 1961, pp. 66, 70, 72, and 73.

CARL D. QUARFORTH, *Primary Examiner.*

L. DWAYNE RUTLEDGE, OSCAR O. VERTIZ, *Examiners.*