T. D. GUTHRIE, Jr.
CULTIVATORS.

No. 194,146. Patented Aug. 14, 1877.

Fig. 1.

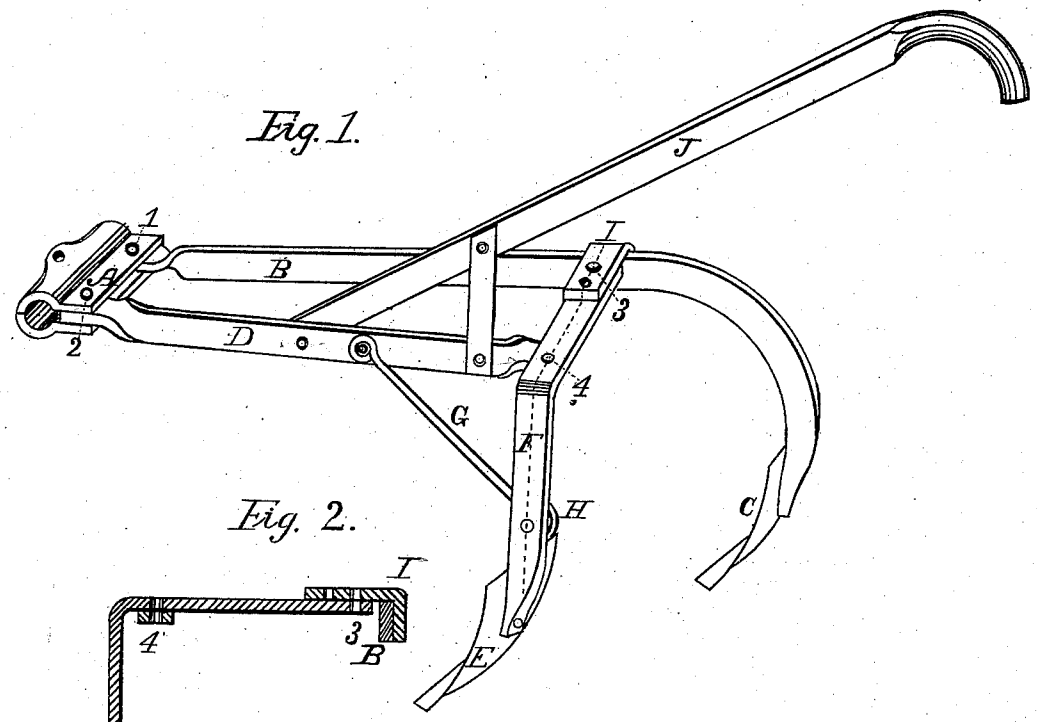

Fig. 2.

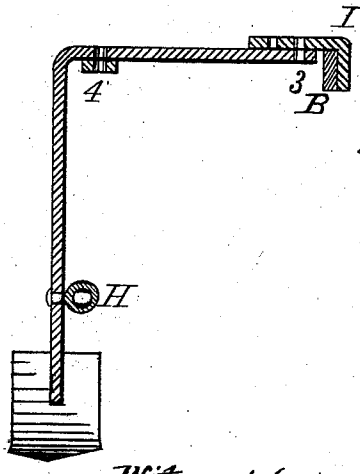

Witnesses;
E. A. Jackman
Henry A. Clair.

Inventor;
Thos D. Guthrie Jr.

N. PETERS, PHOTO-LITHOGRAPHER, WASHINGTON, D. C.

UNITED STATES PATENT OFFICE.

THOMAS D. GUTHRIE, JR., OF GALVA, ILLINOIS.

IMPROVEMENT IN CULTIVATORS.

Specification forming part of Letters Patent No. **194,146**, dated August 14, 1877; application filed June 2, 1877.

To all whom it may concern:

Be it known that I, THOS. D. GUTHRIE, Jr., of Galva, in the county of Henry and State of Illinois, have invented a new and useful Improvement in Two-Horse Cultivators, which improvement is fully set forth in the following specification and accompanying drawings, in which—

Figure 1 is a perspective view of my right-hand cultivator-gang. Fig. 2 is a transverse section of the same.

The object of my invention is to furnish a device by which the face of the plow next the row in each gang may be kept at the same angle to the row during any motion to or from the row. Another object is to furnish a gang possessing the above advantage which is not too expensive to manufacture. This improvement, I claim, accomplishes the above objects.

In the drawing, A is the sleeve or coupling by which the gang is attached to the axle of the cultivator. B is the plow-beam for the plow C. D is the plow-beam, in connection with the standard F, and brace G, and eyebolt H, for the plow E. The object of the piece I, rigid on beam B, is, first, to connect the extension of the standard F to the beam B, and, second, to place the joints 3 and 4 at the same distance apart as the joints 1 and 2. J is the handle, which is made of wood. The piece I is provided with extra holes to adjust the width of the plows. By the joints at 1, 2, 3, and 4, and eyebolt H, the gang is free to move laterally without changing the angle of the plow E to the line of draft. It is obvious that by a similar arrangement of the beam B and an extension of the bar D both plows could be made to operate alike.

I do not claim the sleeve or coupling A, neither the handle J nor the shovels E and C.

Having thus described my invention, what I claim as new, and desire to secure by Letters Patent, is—

The combination of the coupling A, rigid beam B, and beam D, with bent standard F, pivoted to the beams, piece I, and brace G, substantially as described, and for the purpose specified.

THOS. D. GUTHRIE, JR.

Witnesses:

JONAS W. OLSON,

L. P. EK.