(12) INTERNATIONAL APPLICATION PUBLISHED UNDER THE PATENT COOPERATION TREATY (PCT)

(19) World Intellectual Property Organization
International Bureau

(43) International Publication Date
31 August 2017 (31.08.2017)

WIPO | PCT

(10) International Publication Number
WO 2017/144102 A1

(51) International Patent Classification:
H04N 5/225 (2006.01) *G03B 15/05* (2006.01)

(21) International Application Number:
PCT/EP2016/053990

(22) International Filing Date:
25 February 2016 (25.02.2016)

(25) Filing Language: English

(26) Publication Language: English

(71) Applicant: **OSRAM OPTO SEMICONDUCTORS GMBH** [DE/DE]; Leibnizstr. 4, 93055 Regensburg (DE).

(72) Inventors: **CHONG, Chui Wai**; 39, Lintang Seri Arowana 4, Prai, Penang, 13700 (MY). **CHUAH, Teng Hai Ocean**; 18, Lorong Juru 4, Taman Juru, Penang, Bukit Mertajam, 14000 (MY). **KOAY, Seong Tak**; 19, Jalan Ismail Cik Mat, Georgetown, Penang, 10460 (MY). **NG, Geok Ling Adelene**; 28, Medan Mahsuri 1, Bayan Lepas, Penang, 11900 (MY).

(74) Agent: **PATENT ATTORNEYS WILHELM & BECK**; Prinzenstr. 13, 80639 Munich (DE).

(81) Designated States *(unless otherwise indicated, for every kind of national protection available)*: AE, AG, AL, AM, AO, AT, AU, AZ, BA, BB, BG, BH, BN, BR, BW, BY, BZ, CA, CH, CL, CN, CO, CR, CU, CZ, DE, DK, DM, DO, DZ, EC, EE, EG, ES, FI, GB, GD, GE, GH, GM, GT, HN, HR, HU, ID, IL, IN, IR, IS, JP, KE, KG, KN, KP, KR, KZ, LA, LC, LK, LR, LS, LU, LY, MA, MD, ME, MG, MK, MN, MW, MX, MY, MZ, NA, NG, NI, NO, NZ, OM, PA, PE, PG, PH, PL, PT, QA, RO, RS, RU, RW, SA, SC, SD, SE, SG, SK, SL, SM, ST, SV, SY, TH, TJ, TM, TN, TR, TT, TZ, UA, UG, US, UZ, VC, VN, ZA, ZM, ZW.

(84) Designated States *(unless otherwise indicated, for every kind of regional protection available)*: ARIPO (BW, GH, GM, KE, LR, LS, MW, MZ, NA, RW, SD, SL, ST, SZ, TZ, UG, ZM, ZW), Eurasian (AM, AZ, BY, KG, KZ, RU, TJ, TM), European (AL, AT, BE, BG, CH, CY, CZ, DE, DK, EE, ES, FI, FR, GB, GR, HR, HU, IE, IS, IT, LT, LU, LV, MC, MK, MT, NL, NO, PL, PT, RO, RS, SE, SI, SK, SM, TR), OAPI (BF, BJ, CF, CG, CI, CM, GA, GN, GQ, GW, KM, ML, MR, NE, SN, TD, TG).

Published:

— *with international search report (Art. 21(3))*

(54) Title: ELECTRONIC DEVICE AND METHOD FOR OPERATING AN ELECTRONIC DEVICE

(57) Abstract: An electronic device comprises a camera and a ring flash module arranged around an optical axis of the camera. The ring flash module comprises at least one LED chip, a colour sensor and a memory chip.

FIG 1

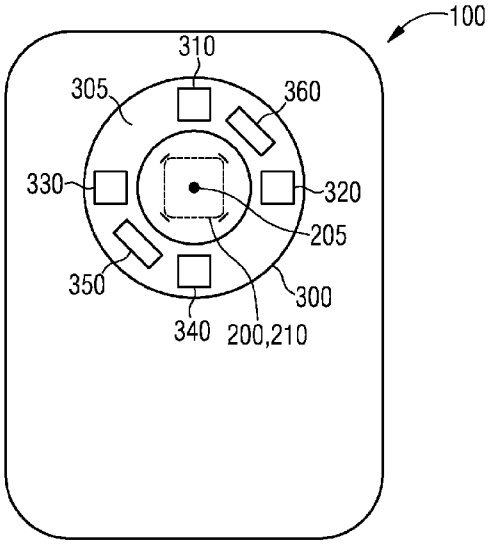

WO 2017/144102 A1

ELECTRONIC DEVICE AND METHOD FOR OPERATING AN ELECTRONIC DEVICE

DESCRIPTION

The present invention relates to an electronic device and to a method for operating an electronic device.

Mobile electronic devices with integrated cameras are known in the state of the art. It is known to integrate cameras into mobile phones. It is also known to provide such mobile electronic devices with flash modules comprising LED chips.

It is an object of the present invention to provide an electronic device. It is a further object of the present invention to provide a method for operating an electronic device. These objectives are achieved by an electronic device and a method for operating an electronic device according to the independent claims. Further embodiments are disclosed in the dependent claims.

An electronic device comprises a camera and a ring flash module arranged around an optical axis of the camera. The ring flash module comprises at least one LED chip, a colour sensor and a memory chip.

The ring flash module of this electronic device may serve to illuminate objects while a picture is taken of these objects using the camera of the electronic device. The arrangement of the ring flash module around the optical axis of the camera may help to provide homogeneous illumination with few shadows visible in the photograph.

In an embodiment of the electronic device, the electronic device is a mobile phone. Advantageously, the ring flash module integrated into this mobile phone may allow to take high quality pictures using the camera integrated into this mobile phone.

In an embodiment of the electronic device, the camera comprises a lens. The ring flash module is arranged around the lens. Advantageously, the ring flash module allows for a soft and homogeneous illumination of objects in front of the lens of the camera, in particular of objects which are located very close to the lens of the camera.

In an embodiment of the electronic device, the ring flash module is designed for sensing a data related to an ambient light using the colour sensor, reading a value from the memory chip and driving the at least one LED chip based on the sensed data and the value. Advantageously, this allows the ring flash module to adapt the flash light generated by the ring flash module to the ambient light in the environments of the electronic device. This may support a high colour fidelity and may help to prevent overexposure or underexposure.

In an embodiment of the electronic device, the memory chip is provided for storing information related to at least one property of the at least one LED chip, in particular information related to a spectrum, a colour coordinate and/or a brightness of the at least one LED chip. Advantageously, the information stored in the memory chip of the ring flash module may allow the ring flash module to adapt drive currents and/or drive voltages used for driving the at least one LED chip of the ring flash module to specific technical characteristics of the at least one LED chip. This may allow for an improved controllability of the light generated by the ring flash module.

In an embodiment of the electronic device, the ring flash module comprises at least two LED chips designed for emitting light in different spectra. This allows the ring flash module to mix the light generated by the two LED chips to create a light mixture with adjustable colour.

In an embodiment of the electronic device, the ring flash module comprises a first LED chip designed for emitting light in the red spectral range, a second LED chip designed for emitting light in the green spectral range, a third LED chip designed for emitting light in the blue spectral range and a fourth LED chip designed for emitting light in the yellow spectral range. Advantageously, these four LED chips allow the ring flash module to generate a mixture of light with a colour that is fully controllable within a broad range. The presence of the second LED chip designed for emitting light in the green spectral range and the fourth LED chip designed for emitting light in the yellow spectral range may help to allow for a particular precise adjustment of a white point of the generated light mixture.

A method for operating an electronic device with a camera and a ring flash module arranged around an optical axis of the camera, wherein the ring flash module comprises at least one LED chip, a colour sensor and a memory chip, comprises steps for sensing a data related to an ambient light using the colour sensor, reading a value from the memory chip and driving the at least one LED chip based on the sensed data and the value.

Advantageously, this method can allow for producing high quality photographs with good colour fidelity and homogeneous illumination of the depicted objects. Usage of the ring flash module arranged around the optical axis of the camera allows for a homogeneous illumination, producing only soft shadows. Sensing a data related to an ambient light using the colour sensor allows for adapting the light generated by the at least one LED chip of the ring flash module to the ambient light to allow for high colour fidelity. Reading a value from the memory chip makes it possible to take specific technical properties of the at least one LED chip stored in the memory chip into account.

In an embodiment of the method, the sensed data is related to a colour coordinate and/or a brightness of the ambient light. Advantageously, this makes it possible to adjust the light generated by the at least one LED chip of the ring flash module of the electronic device to the colour coordinate and/or the brightness of the ambient light to ensure a high colour fidelity of a photograph taken with the camera.

In an embodiment of the method, the value is read in dependence of the sensed data. Advantageously, this may allow to adjust the light generated by the at least one LED chip of the ring flash module of the electronic device even more precisely to the sensed data related the ambient light. The memory chip of the ring flash module of the electronic device may for example store information on drive voltages and/or drive currents suitable for generating a particular light colour and/or brightness using the specific at least one LED chip of the ring flash module of the electronic device.

The above-described properties, features and advantages of this invention and the way in which they are achieved will become clearer and more clearly understood in association with the following description of the exemplary embodiments which are explained in greater detail in association with the drawings. Here in schematic illustration in each case:

Figure 1 shows an electronic device with a camera and a ring flash module; and

Figure 2 shows a block diagram of the ring flash module.

Figure 1 shows a schematic view of an electronic device 100. The electronic device 100 may be a portable electronic device. The electronic device 100 may for example be a mobile phone.

The electronic device 100 comprises an integrated camera 200. The camera 200 is designed for taking still photographs and

may also be designed for taking videos. The camera 200 is a digital camera.

The camera 200 comprises a lens 210 that is arranged such that light can enter into the camera 200 from the environment of the electronic device 100 through the lens 210. The lens 210 may for example be arranged in an opening of a wall of a housing of the electronic device 100. An optical axis 205 of the camera 200 is defined by an optical axis of the lens 210 and may for example be arranged perpendicular to the wall of the housing of the electronic device 100.

The electronic device 100 further comprises a ring flash module 300. The ring flash module 300 is provided for generating light to illuminate objects in the environment of the electronic device 100 that are to be photographed using the camera 200.

The ring flash module 300 comprises a ring-shaped emission face 305. Light generated by the ring flash module 300 is emitted at the emission face 305. The ring flash module 300 is integrated into the electronic device 100 such that light emitted at the emission face 305 is emitted into the direction of the objects in the environment of the electronic device 100 that are to be photographed by the camera 200.

The ring flash module 300 is arranged around the optical axis 205 of the camera 200 such that the emission face 305 of the ring flash module 300 is arranged around the optical axis 205 of the camera 200. The ring flash module 300 may be arranged in an opening of the wall of the housing of the electronic device 100 such that the emission face 305 of the ring flash module 300 is arranged around the lens 210 of the camera 200.

Figure 2 shows a schematic block diagram of the ring flash module 300. The ring flash module 300 comprises at least one LED chip (light emitting diode chip), a colour sensor 350 and a memory chip 360. In the example depicted in Figure 2, the

ring flash module 300 furthermore comprises a driving system 370.

The at least one LED chip of the ring flash module 300 is provided for generating visible light. It is possible that the ring flash module 300 comprises at least two LED chips designed for emitting light in different spectra. For example, the ring flash module 300 may comprise a first LED chip designed for emitting light in the blue spectral range and a second LED chip designed for emitting light in the yellow spectral range.

In the example depicted in Figures 1 and 2, the ring flash module 300 comprises a first LED chip 310, a second LED chip 320, a third LED chip 330 and a fourth LED chip 340. The first LED chip 310 is designed for emitting light in the red spectral range. The second LED chip 320 is designed for emitting light in the green spectral range. The third LED chip 330 is designed for emitting light in the blue spectral range. The fourth LED chip 340 is designed for emitting light in the yellow spectral range.

A mixture of the light generated by the individual LED chips 310, 320, 330, 340 comprises a broad spectrum and may be regarded as white light. By adjusting the amount of light generated by each of the LED chips 310, 320, 330, 340, the spectrum of the mixture of light may be adjusted. This may for example allow to adjust a colour coordinate of the mixture of light generated by the LED chips 310, 320, 330, 340.

It is possible to provide the ring flash module 300 of the electronic device 100 with fewer or more than four LED chips 310, 320, 330, 340. For example, the fourth LED chip 340 designed for emitting light in the yellow spectral range may be omitted in a simplified embodiment.

The LED chips 310, 320, 330, 340 of the ring flash module 300 are connected to the driving system 370 of the ring flash

module 300. The driving system 370 serves to drive the LED chips 310, 320, 330, 340 by applying electric voltages and electric currents to the LED chips 310, 320, 330, 340. The driving system 370 may be capable of adjusting the electric currents and/or the electric voltages applied to the LED chips 310, 320, 330, 340 to adjust the intensity and/or the spectrum of the light generated by each of the LED chips 310, 320, 330, 340. This allows the driving system 370 to adjust properties of the mixture of light generated by the LED chips 310, 320, 330, 340.

The colour sensor 350 of the ring flash module 300 is provided for sensing a data related to an ambient light in the environment of the electronic device 100. The sensed data related to the ambient light may for example be related to a colour coordinate and/or a brightness of the ambient light. The colour sensor 350 may also be capable of sensing data related to more than one property of the ambient light. The colour sensor 350 may also be referred to as an RGB sensor.

The colour sensor 350 is connected to the driving system 370 of the ring flash module 300.

The driving system 370 is capable of adjusting the light generated by the LED chips 310, 320, 330, 340 in dependence of the sensed data provided by the colour sensor 350. This allows the driving system 370 to adjust the light emitted by the ring flash module 300 in dependence of the ambient light in the environment of the electronic device 100 to allow the camera 200 to produce high quality photographs at different ambient light situations. The driving system 370 of the ring flash module 300 may for example adjust the light generated by the individual LED chips 310, 320, 330, 340 such that the mixture of the light generated by the LED chips 310, 320, 330, 340 is similar to the ambient light in the environment of the electronic device 100.

The memory chip 360 of the ring flash module 300 is provided for storing information related to at least one property of the LED chips 310, 320, 330, 340. The memory chip 360 may for example be provided to store information related to a spectrum, a colour temperature and/or a brightness of light generated by the LED chips 310, 320, 330, 340. The memory chip 360 may also store information related to electric voltages and/or electric currents necessary to drive the LED chips 310, 320, 330, 340 to generate light comprising a particular spectrum, a particular colour coordinate and/or a particular brightness. The information stored in the memory chip 360 allows the driving system 370 of the ring flash module 300 to adapt the drive currents and/or drive voltages used for driving the LED chips 310, 320, 330, 340 to specific technological properties of the LED chips 310, 320, 330, 340.

The memory chip 360 of the ring flash module 300 is connected to the driving system 370. The driving system 370 is capable of reading one or more values from the memory chip 360 and to drive the LED chips 310, 320, 330, 340 in dependence of the one or more values read from the memory chip 360. The value read from the memory chip 360 may be read in dependence of the data sensed by the colour sensor 350.

The invention has been illustrated and described in detail with the aid of the preferred exemplary embodiments. Nevertheless, the invention is not restricted to the examples disclosed. Rather, other variants may be derived therefrom by a person skilled in the art without departing from the protective scope of the invention.

REFERENCE SYMBOLS

100 electronic device

200 camera
205 optical axis
210 lens

300 ring flash module
305 emission face

310 first LED chip
320 second LED chip
330 third LED chip
340 fourth LED chip

350 colour sensor

360 memory chip

370 driving system

CLAIMS

1. An electronic device (100)
with a camera (200)
and a ring flash module (300) arranged around an optical axis (205) of the camera (200),
wherein the ring flash module (300) comprises at least one LED chip (310, 320, 330, 340), a colour sensor (350) and a memory chip (360).

2. The electronic device (100) according to claim 1,
wherein the electronic device is a mobile phone.

3. The electronic device (100) according to one of the previous claims,
wherein the camera (200) comprises a lens (210),
wherein the ring flash module (300) is arranged around the lens (210).

4. The electronic device (100) according to one of the previous claims,
wherein the ring flash module (300) is designed for sensing a data related to an ambient light using the colour sensor (350), reading a value from the memory chip (360) and driving the at least one LED chip (310, 320, 330, 340) based on the sensed data and the value.

5. The electronic device (100) according to claim 4,
wherein the memory chip (360) is provided for storing information related to at least one property of the at least one LED chip (310, 320, 330, 340), in particular information related to a spectrum, a colour coordinate and/or a brightness of the at least one LED chip (310, 320, 330, 340).

6. The electronic device (100) according to one of the previous claims,
wherein the ring flash module (300) comprises at least

two LED chips (310, 320, 330, 340) designed for emitting light in different spectra.

7. The electronic device (100) according to claim 6, wherein the ring flash module (300) comprises a first LED chip (310) designed for emitting light in the red spectral range, a second LED chip (320) designed for emitting light in the green spectral range, a third LED chip (330) designed for emitting light in the blue spectral range and a fourth LED chip (340) designed for emitting light in the yellow spectral range.

8. A method for operating an electronic device (100) with a camera (200) and a ring flash module (300) arranged around an optical axis (205) of the camera (200), wherein the ring flash module (300) comprises at least one LED chip (310, 320, 330, 340), a colour sensor (350) and a memory chip (360),
the method comprising the following steps:
- sensing a data related to an ambient light using the colour sensor (350);
- reading a value from the memory chip (360);
- driving the at least one LED chip (310, 320, 330, 340) based on the sensed data and the value.

9. The method according to claim 8, wherein the sensed data is related to a colour coordinate and/or a brightness of the ambient light.

10. The method according to one of claims 8 and 9, wherein the value is read in dependence of the sensed data.

FIG 1

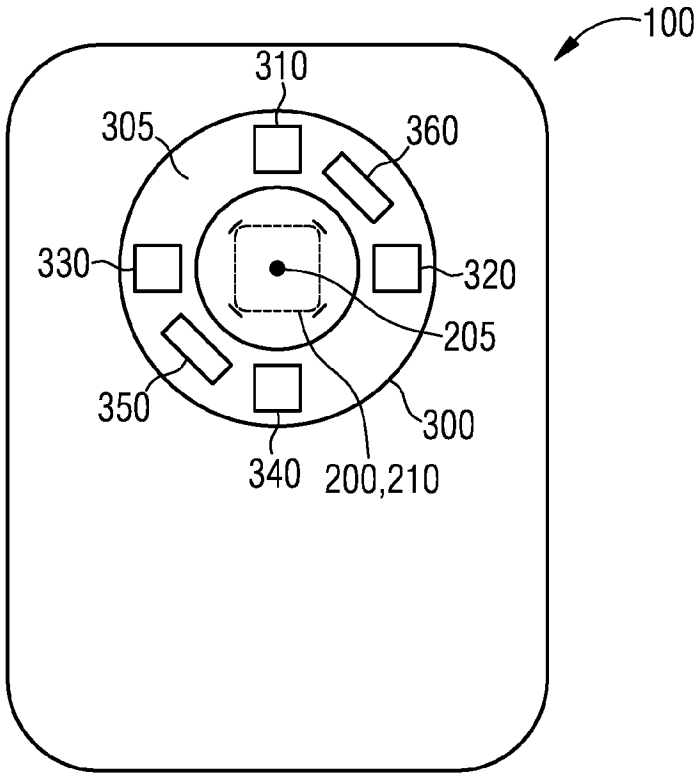
100
310
305
360
330
320
205
350
300
340
200,210

FIG 2

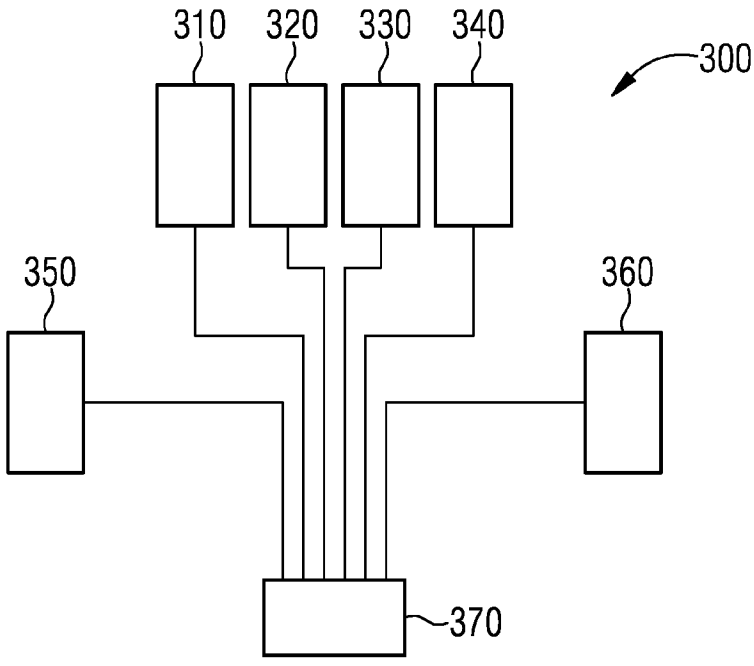
310
320
330
340
300
350
360
370

INTERNATIONAL SEARCH REPORT

International application No
PCT/EP2016/053990

A. CLASSIFICATION OF SUBJECT MATTER
INV. H04N5/225 G03B15/05
ADD.

According to International Patent Classification (IPC) or to both national classification and IPC

B. FIELDS SEARCHED

Minimum documentation searched (classification system followed by classification symbols)
H04N G03B

Documentation searched other than minimum documentation to the extent that such documents are included in the fields searched

Electronic data base consulted during the international search (name of data base and, where practicable, search terms used)

EPO-Internal, WPI Data

C. DOCUMENTS CONSIDERED TO BE RELEVANT

Category*	Citation of document, with indication, where appropriate, of the relevant passages	Relevant to claim No.
X Y	US 2014/340572 A1 (SATO TADAYOSHI [JP] ET AL) 20 November 2014 (2014-11-20) paragraph [0034]; figure 1 paragraph [0035] paragraph [0053] paragraph [0038] paragraph [0043] ----- -/--	1,3,6-8, 10 2

[X] Further documents are listed in the continuation of Box C.

[X] See patent family annex.

* Special categories of cited documents :

"A" document defining the general state of the art which is not considered to be of particular relevance

"E" earlier application or patent but published on or after the international filing date

"L" document which may throw doubts on priority claim(s) or which is cited to establish the publication date of another citation or other special reason (as specified)

"O" document referring to an oral disclosure, use, exhibition or other means

"P" document published prior to the international filing date but later than the priority date claimed

"T" later document published after the international filing date or priority date and not in conflict with the application but cited to understand the principle or theory underlying the invention

"X" document of particular relevance; the claimed invention cannot be considered novel or cannot be considered to involve an inventive step when the document is taken alone

"Y" document of particular relevance; the claimed invention cannot be considered to involve an inventive step when the document is combined with one or more other such documents, such combination being obvious to a person skilled in the art

"&" document member of the same patent family

Date of the actual completion of the international search	Date of mailing of the international search report
30 March 2016	08/04/2016

Name and mailing address of the ISA/	Authorized officer
European Patent Office, P.B. 5818 Patentlaan 2 NL - 2280 HV Rijswijk Tel. (+31-70) 340-2040, Fax: (+31-70) 340-3016	Thieme, Markus

1

INTERNATIONAL SEARCH REPORT

International application No
PCT/EP2016/053990

C(Continuation). DOCUMENTS CONSIDERED TO BE RELEVANT

Category*	Citation of document, with indication, where appropriate, of the relevant passages	Relevant to claim No.
X	US 2008/175579 A1 (KAWAKAMI CHIKUNI [JP]) 24 July 2008 (2008-07-24)	1,3-10
Y	paragraph [0077] paragraph [0098] paragraph [0093] paragraph [0110] paragraph [0111] paragraph [0112] paragraph [0113] paragraph [0114] paragraph [0115] paragraph [0118] -----	2
A	US 2014/146225 A1 (CHEN YU-HAN [TW]) 29 May 2014 (2014-05-29) abstract -----	2

1

INTERNATIONAL SEARCH REPORT

Information on patent family members

International application No
PCT/EP2016/053990

Patent document cited in search report	Publication date	Patent family member(s)	Publication date
US 2014340572 A1	20-11-2014	JP 2013130631 A	04-07-2013
		US 2014340572 A1	20-11-2014
		WO 2013094457 A1	27-06-2013
US 2008175579 A1	24-07-2008	NONE	
US 2014146225 A1	29-05-2014	TW 201421140 A	01-06-2014
		US 2014146225 A1	29-05-2014