US 20150267593A1

(19) **United States**

(12) **Patent Application Publication**

Lauder et al.

(10) **Pub. No.: US 2015/0267593 A1**

(43) **Pub. Date: Sep. 24, 2015**

(54) **SYSTEM AND METHOD FOR FORMING ELONGATED PERFORATIONS IN AN INNER BARREL SECTION OF AN ENGINE**

(71) Applicant: **THE BOEING COMPANY**, Chicago, IL (US)

(72) Inventors: **Arnold J. Lauder**, Winnipeg (CA); **Mark F. Gabriel**, Renton, WA (US)

(73) Assignee: **THE BOEING COMPANY**, Chicago, IL (US)

(21) Appl. No.: **14/716,402**

(22) Filed: **May 19, 2015**

Related U.S. Application Data

(63) Continuation-in-part of application No. 14/012,243, filed on Aug. 28, 2013.

Publication Classification

(51) **Int. Cl.**

F01N 13/00	(2006.01)
B23B 39/24	(2006.01)
B23C 1/12	(2006.01)
B23B 39/14	(2006.01)

(52) **U.S. Cl.**

CPC ***F01N 13/007*** (2013.01); ***B23B 39/14*** (2013.01); ***B23B 39/24*** (2013.01); ***B23C 1/12*** (2013.01); *B23B 2215/04* (2013.01); *B23B 2270/20* (2013.01); *B23C 2215/04* (2013.01); *B23C 2220/24* (2013.01); *B23C 2226/27* (2013.01); *B23B 2226/27* (2013.01); *B23C 2270/18* (2013.01)

(57) **ABSTRACT**

Certain embodiments of the present disclosure provide an acoustic inlet barrel of an engine. The acoustic inlet barrel may include an inner barrel configured to provide a boundary for directing airflow through the engine. The inner barrel may include an inner face sheet separated from an outer face sheet by an acoustic core. The inner barrel may include a plurality of elongated, non-circular perforations formed through the inner face sheet.

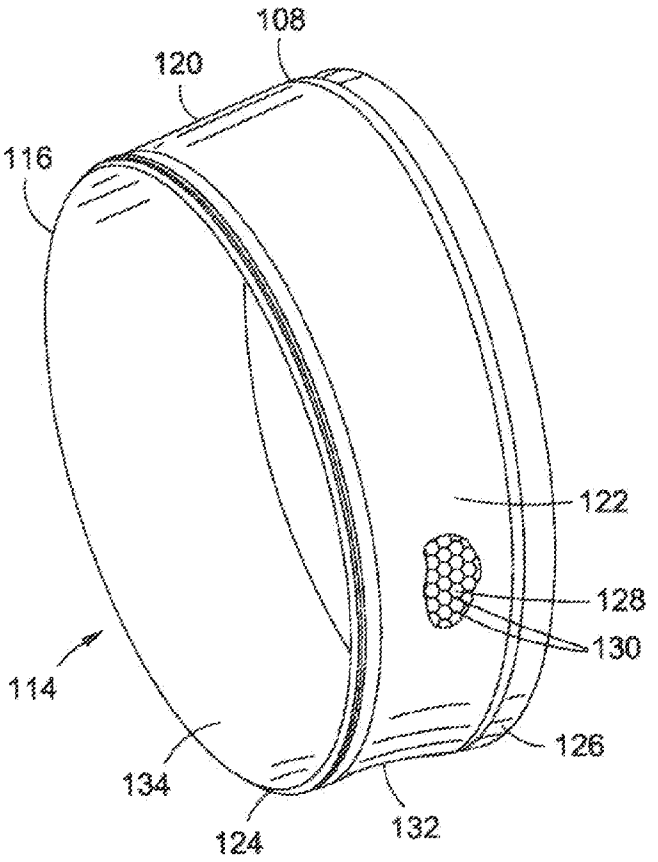

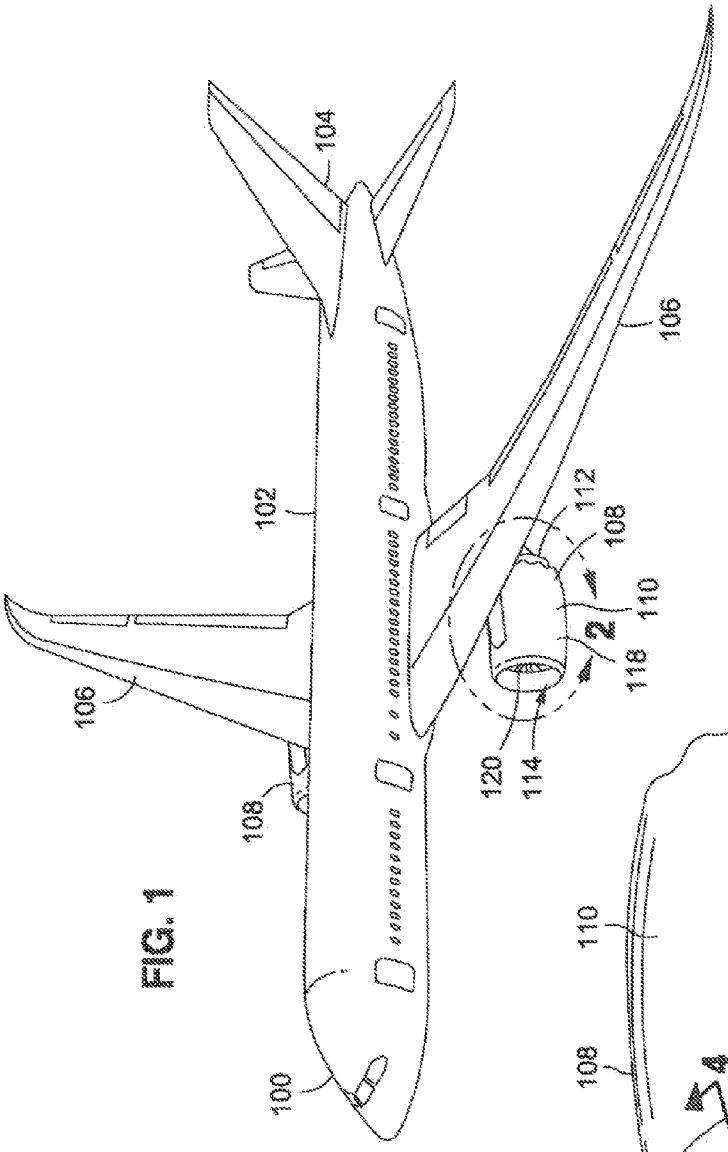
104
102
106
112
108
110
2
118
120
114
106
108
100

FIG. 1

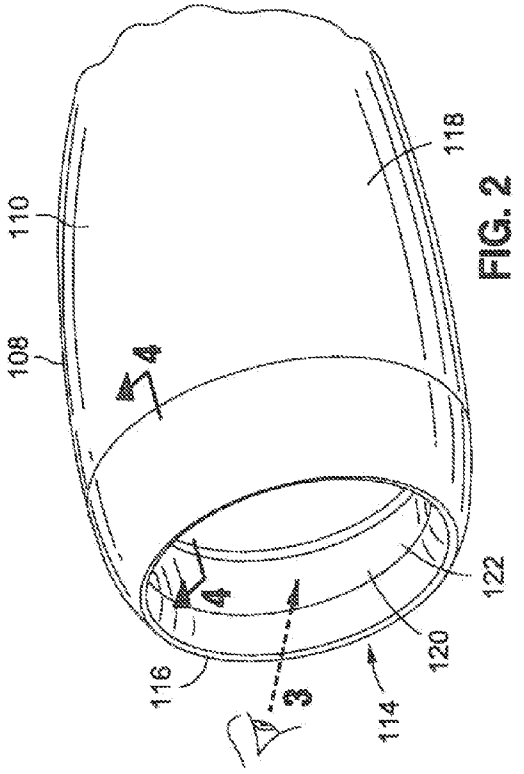
118
110
108
4
122
4
1
116
3
120
114

FIG. 2

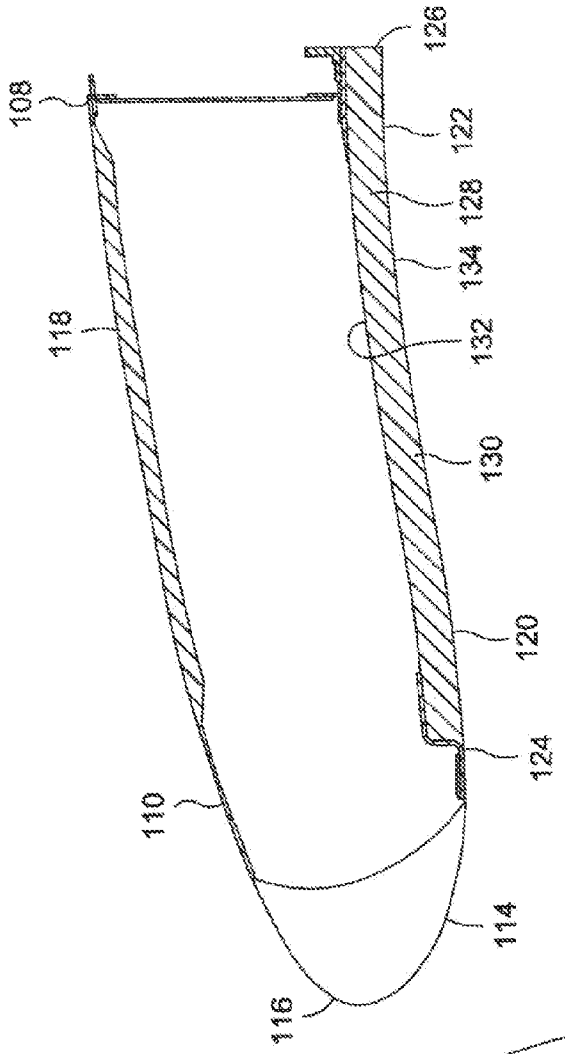
108
126
122
128
134
118
132
130
120
124
110
114
116

FIG. 4

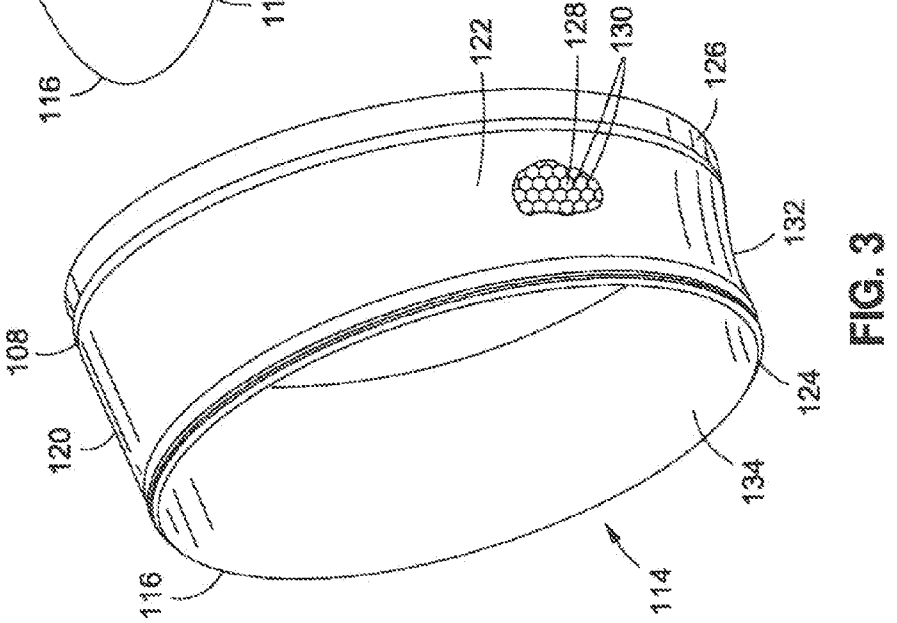
122
128
130
126
132
108
124
120
134
116
114

FIG. 3

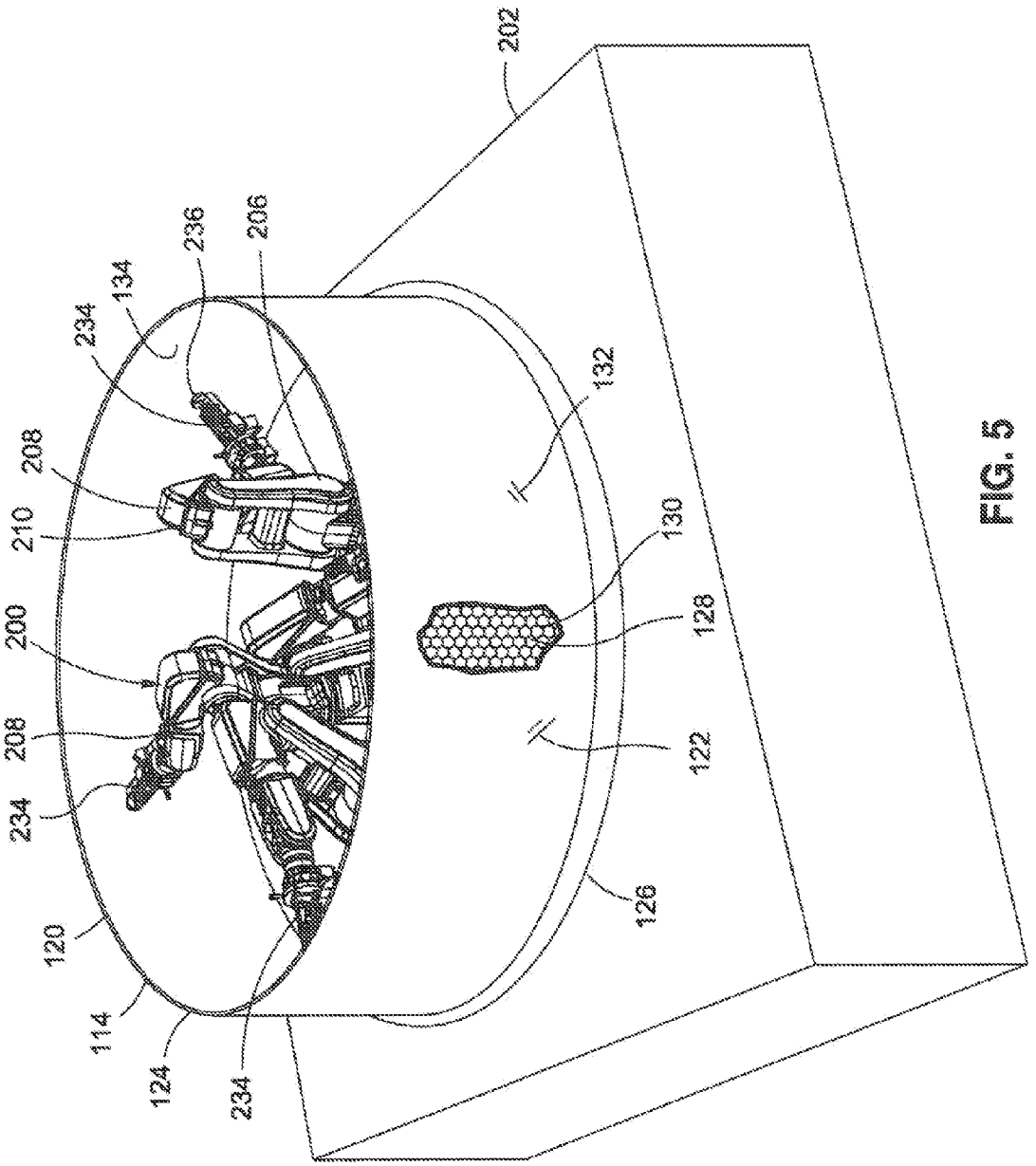
202
236
206
134
234
132
208
210
130
200
128
208
122
234
126
120
114
124
234

FIG. 5

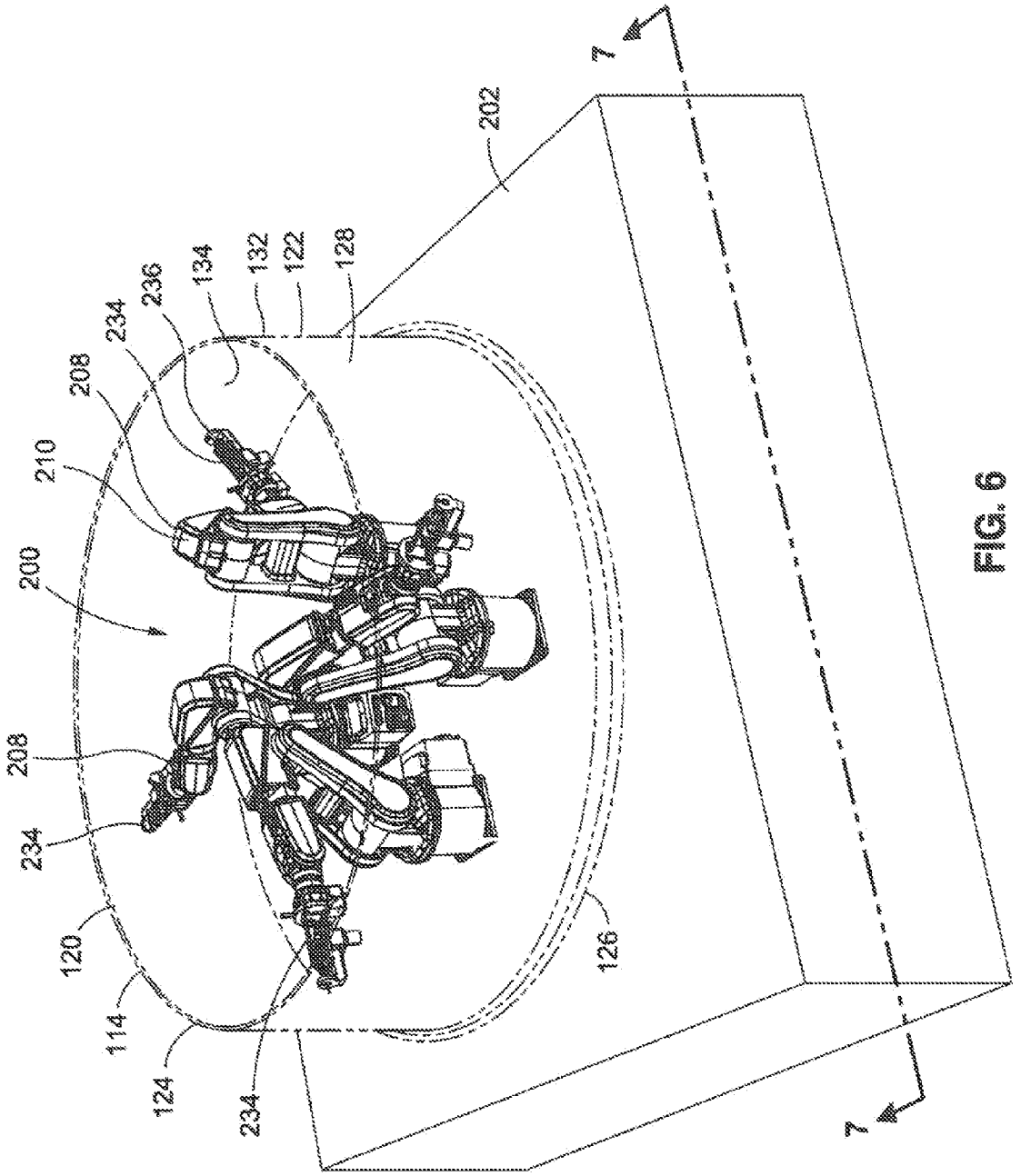
7
202
128
122
132
134
236
234
208
210
200
208
234
120
114
124
234
126
7

FIG. 6

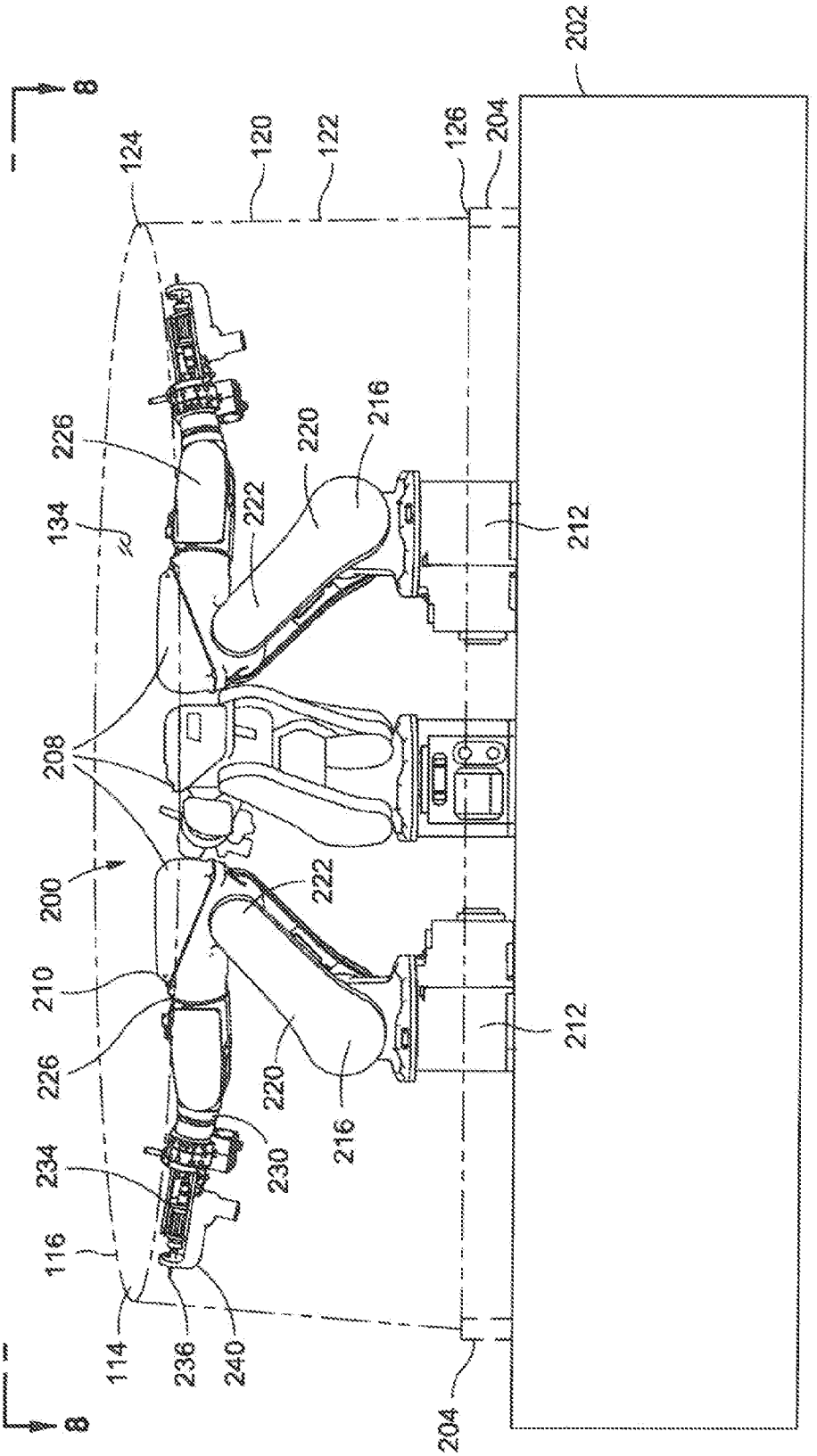
8
8
202
124
120
122
126
204
226
220
216
134
222
212
208
200
222
210
226
220
216
212
234
230
116
114
236
240
204

FIG. 7

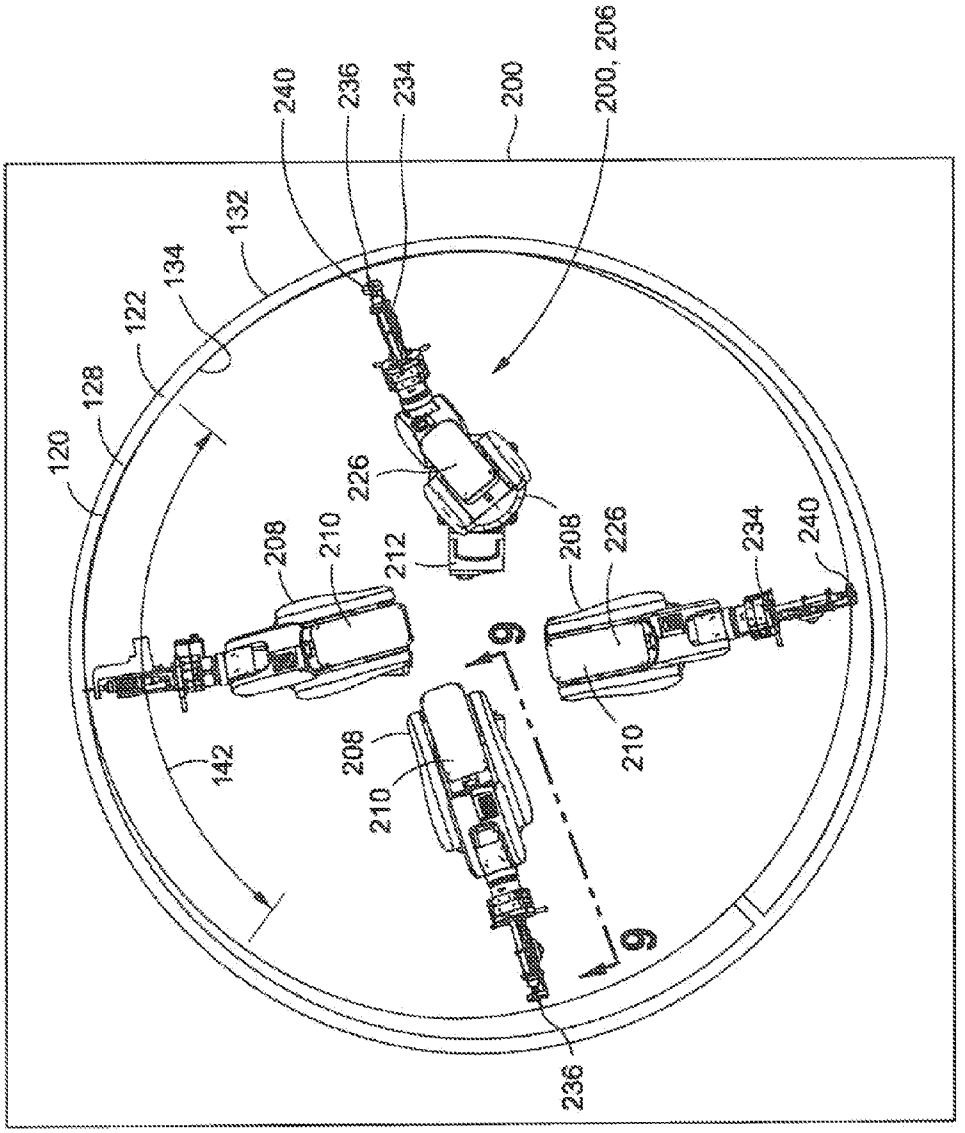
240
236
234
200
200, 206
132
134
122
128
120
226
208
210
212
208
226
234
240
9
9
208
210
210
142
236

FIG. 8

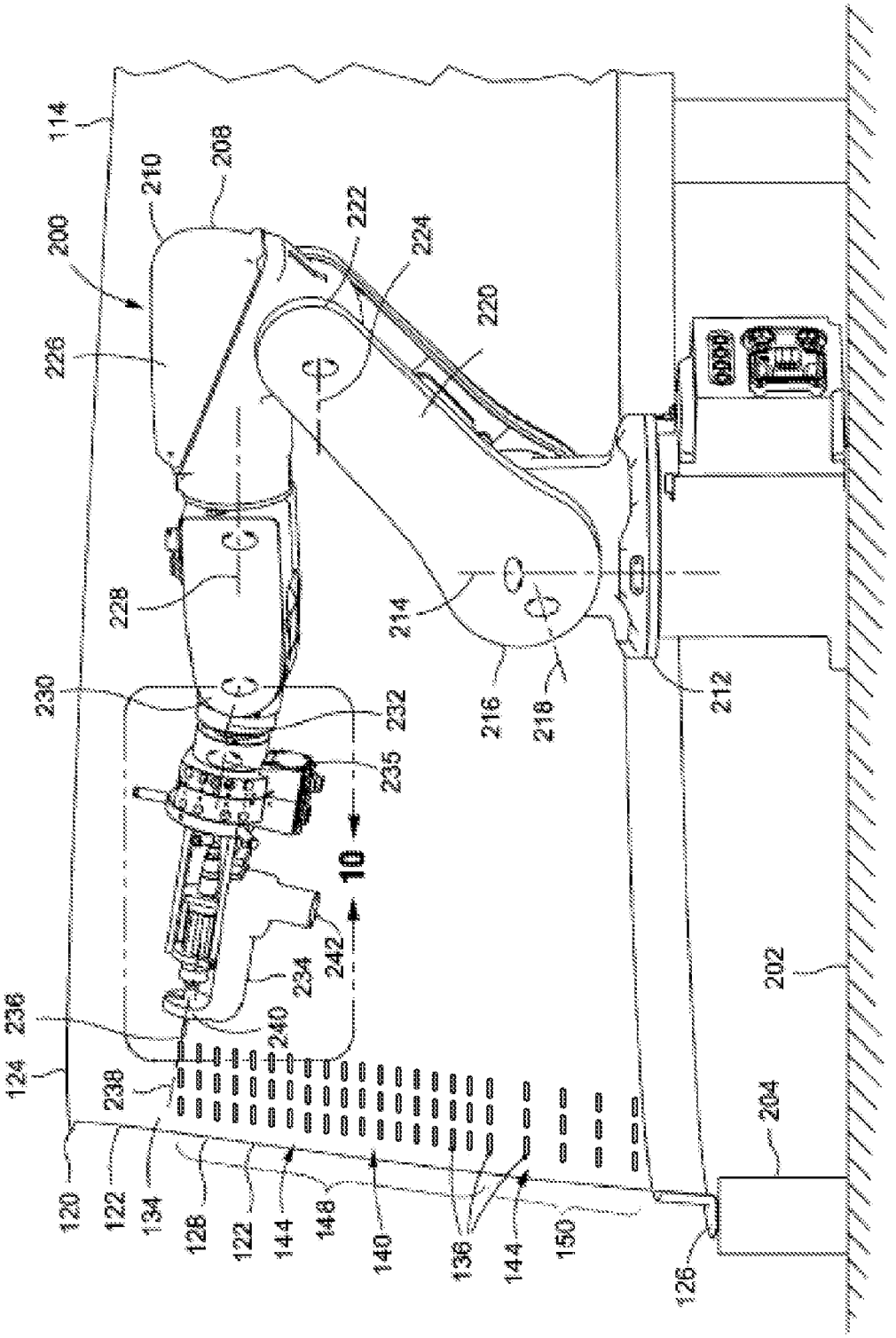
114
210
208
200
222
224
220
226
228
214
230
232
216
218
212
235
10
242
234
236
240
124
238
202
204
120
122
134
126
122
144
148
140
136
144
150
126

FIG. 9

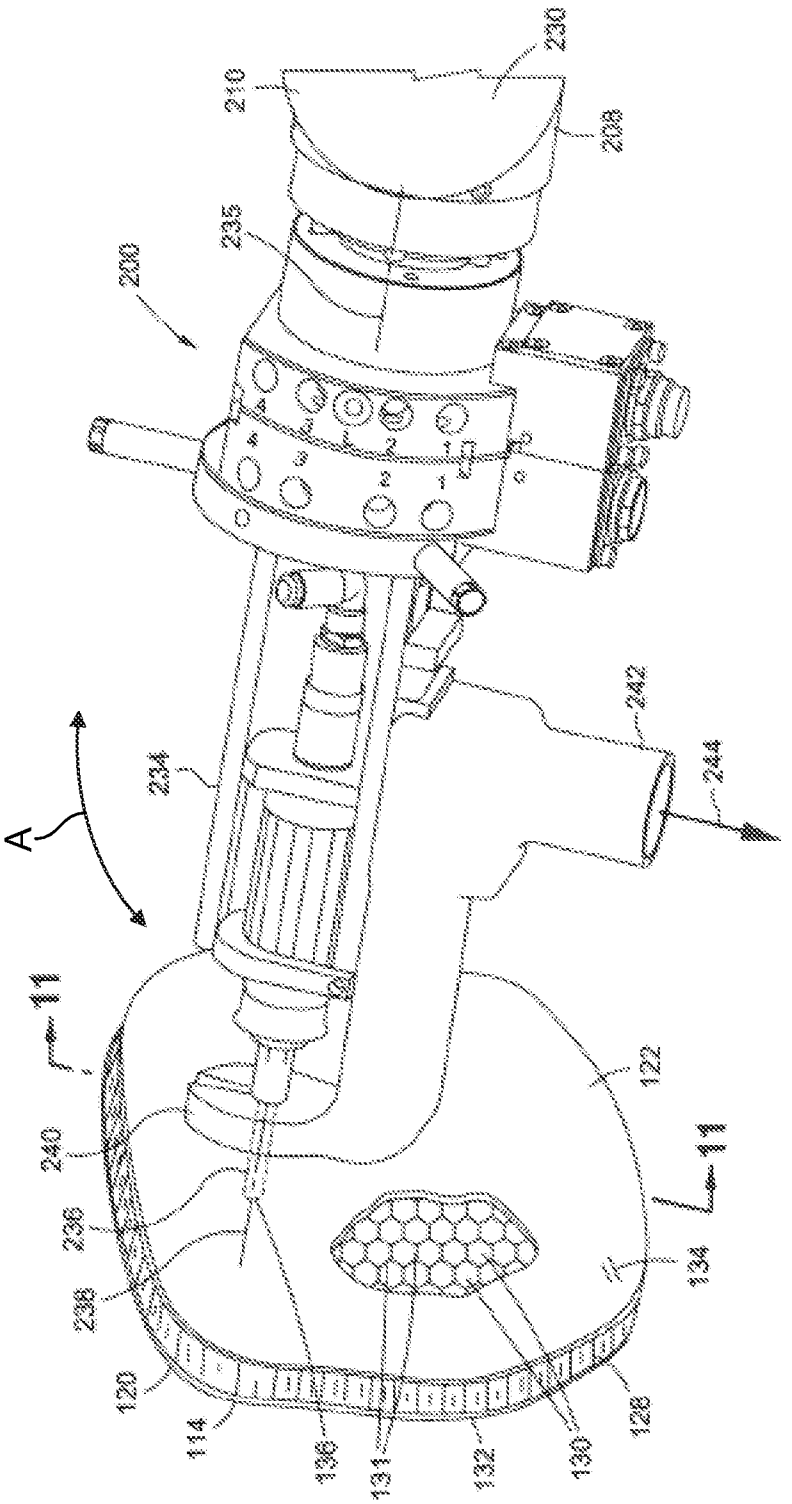
230
210
238
235
200
242
244
234
A
11
122
240
11
236
134
238
120
114
136
131
132
130
128

FIG. 10

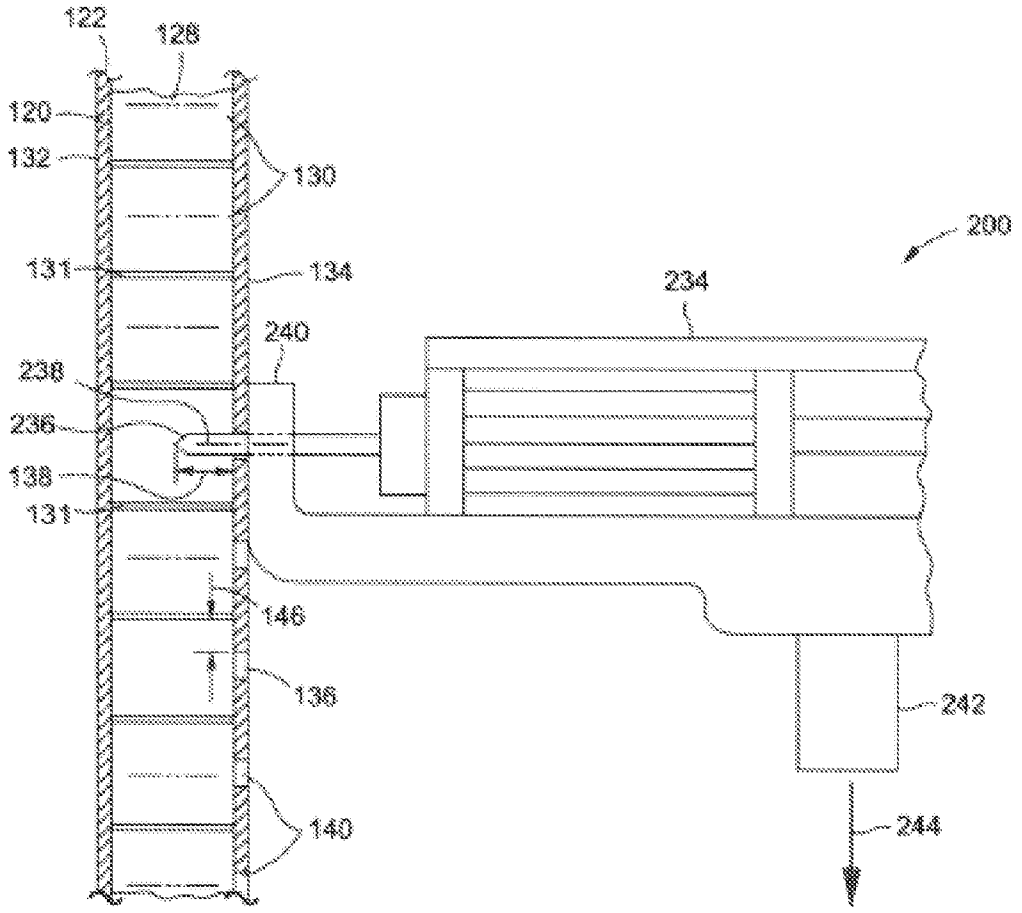
122
128
120
132
130
131
134
200
234
240
238
236
138
131
146
138
242
140
244

FIG. 11

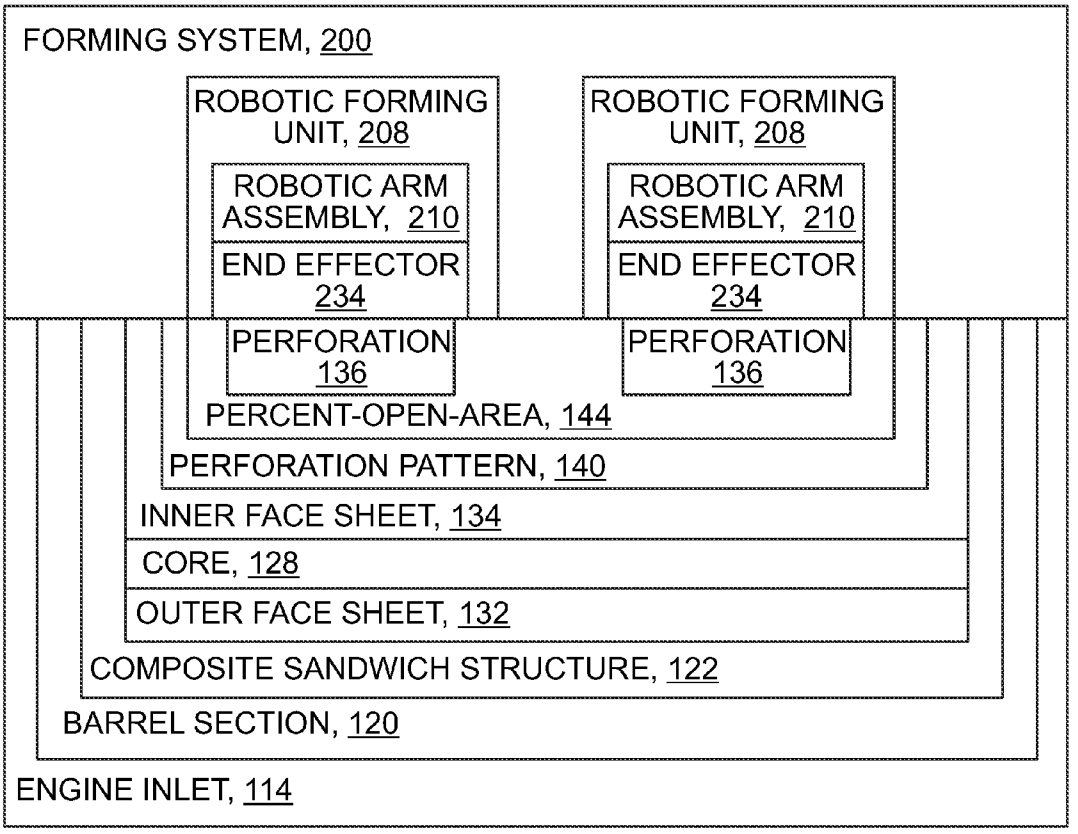
FORMING SYSTEM, 200
ROBOTIC FORMING UNIT, 208
ROBOTIC ARM ASSEMBLY, 210
END EFFECTOR 234
ROBOTIC FORMING UNIT, 208
ROBOTIC ARM ASSEMBLY, 210
END EFFECTOR 234
PERFORATION 136
PERFORATION 136
PERCENT-OPEN-AREA, 144
PERFORATION PATTERN, 140
INNER FACE SHEET, 134
CORE, 128
OUTER FACE SHEET, 132
COMPOSITE SANDWICH STRUCTURE, 122
BARREL SECTION, 120
ENGINE INLET, 114

FIG. 12

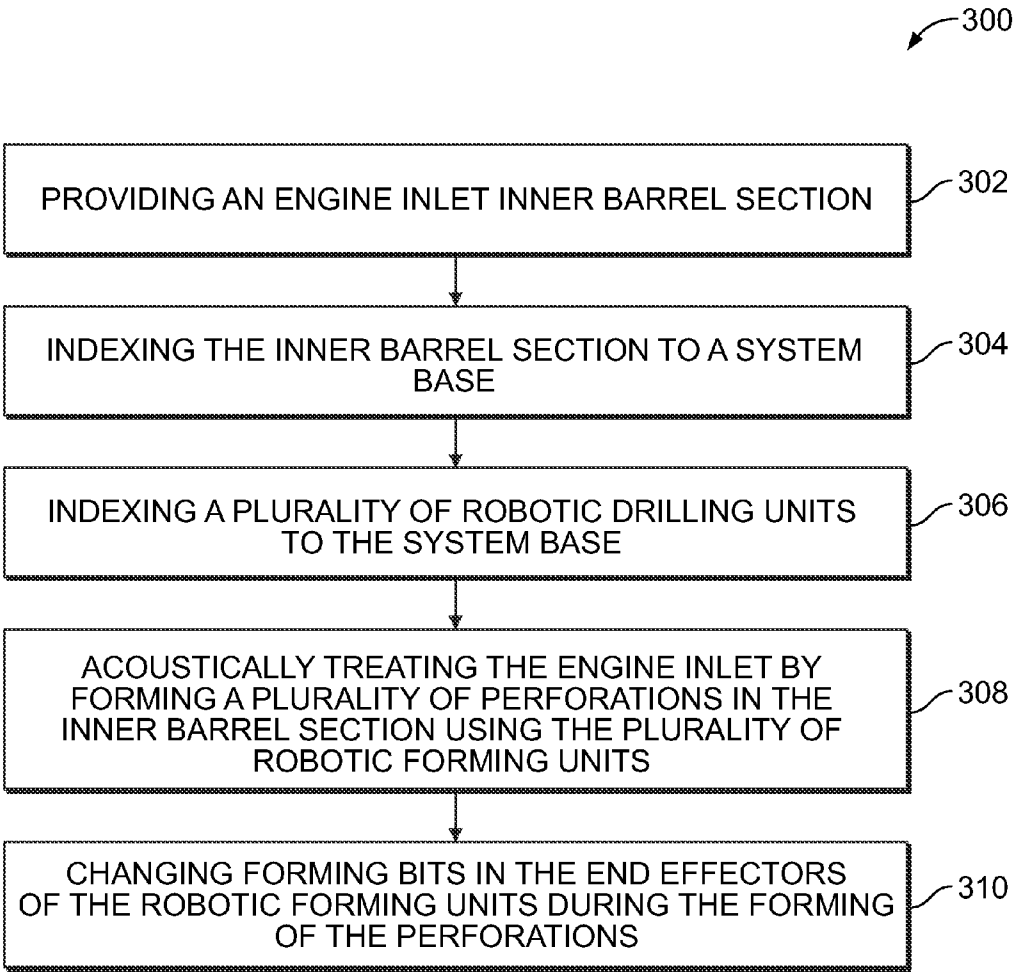
300
PROVIDING AN ENGINE INLET INNER BARREL SECTION
302
INDEXING THE INNER BARREL SECTION TO A SYSTEM BASE
304
INDEXING A PLURALITY OF ROBOTIC DRILLING UNITS TO THE SYSTEM BASE
306
ACOUSTICALLY TREATING THE ENGINE INLET BY FORMING A PLURALITY OF PERFORATIONS IN THE INNER BARREL SECTION USING THE PLURALITY OF ROBOTIC FORMING UNITS
308
CHANGING FORMING BITS IN THE END EFFECTORS OF THE ROBOTIC FORMING UNITS DURING THE FORMING OF THE PERFORATIONS
310

FIG. 13

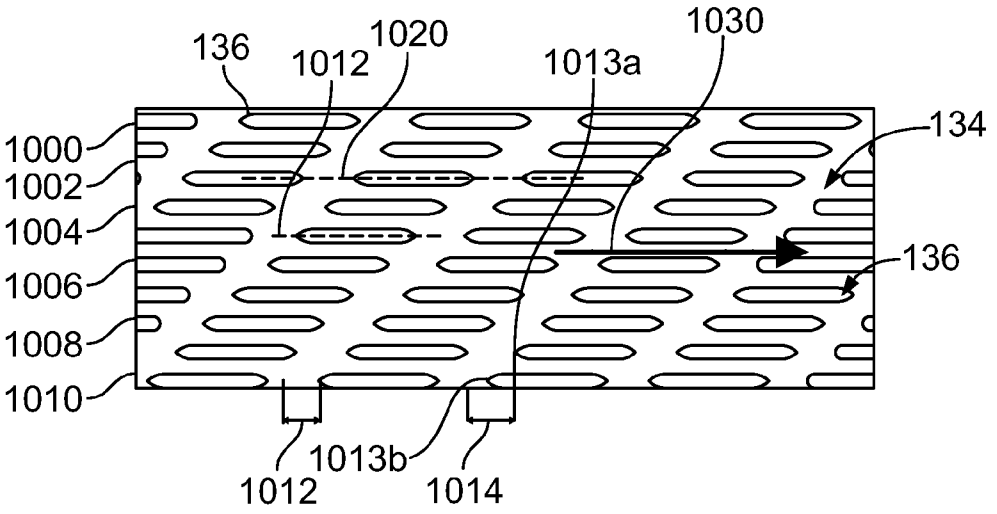

FIG. 14

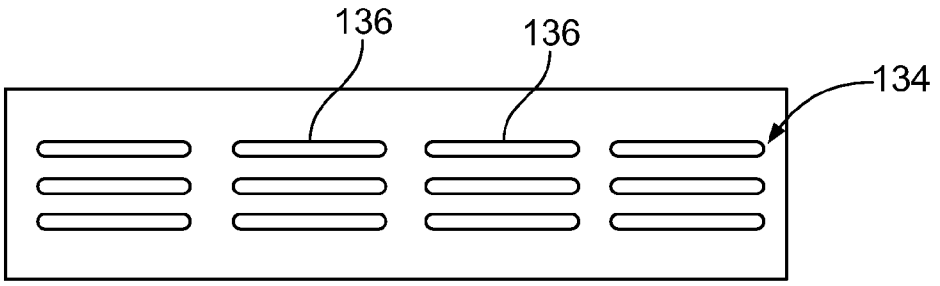

FIG. 15

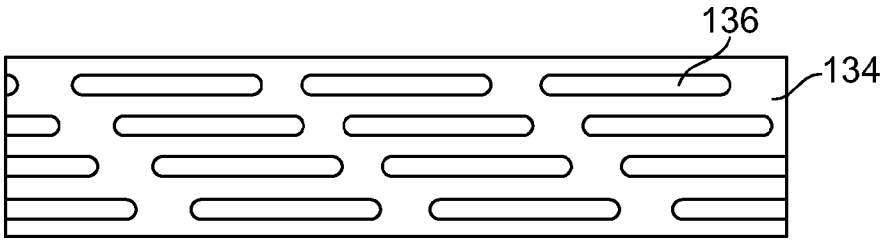

FIG. 16

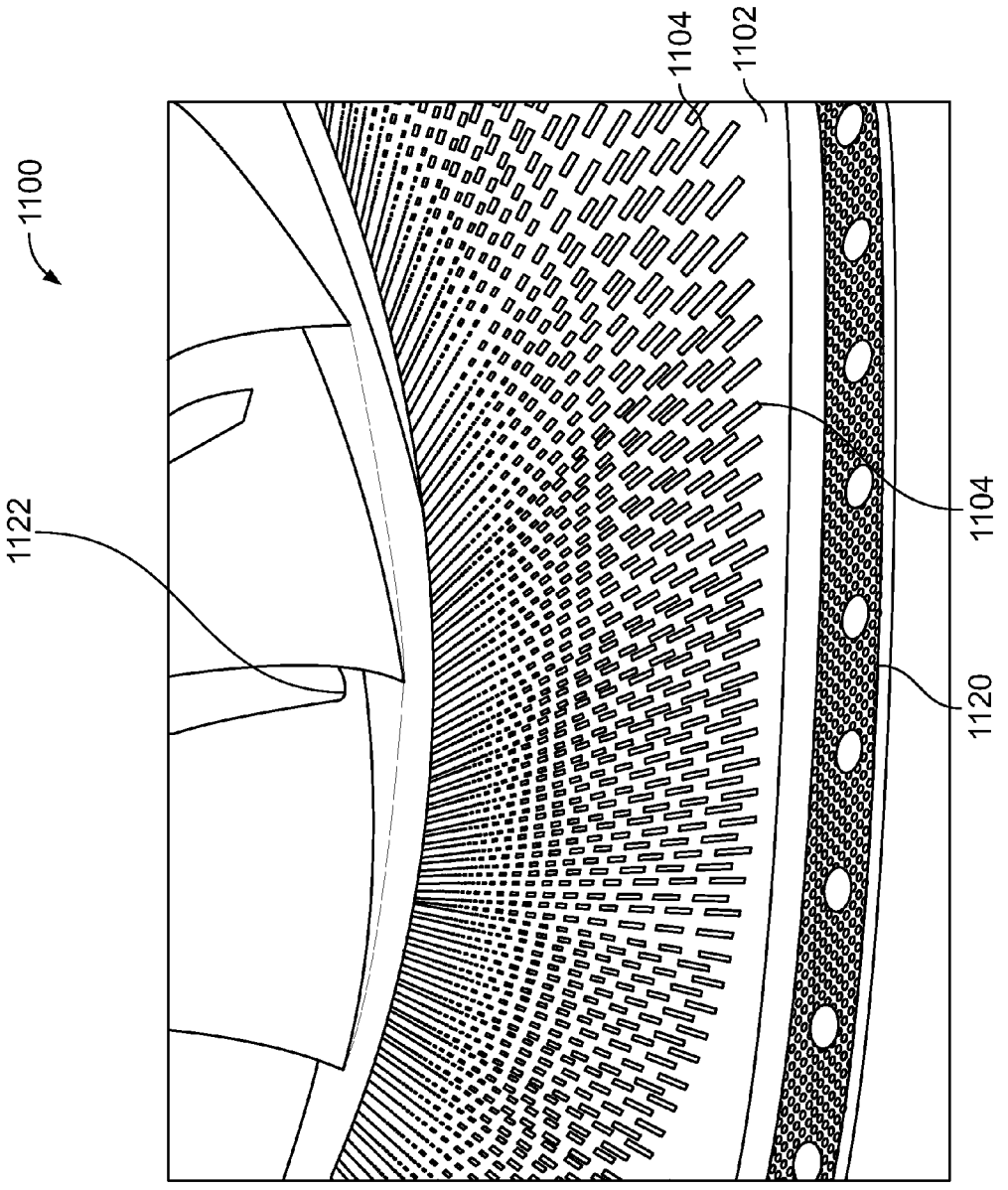

FIG. 17

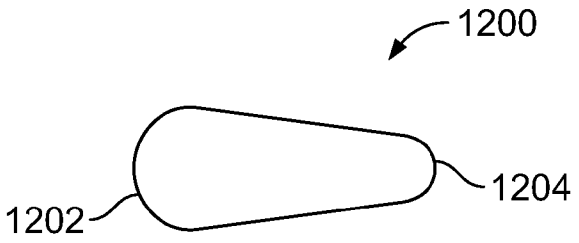

FIG. 18

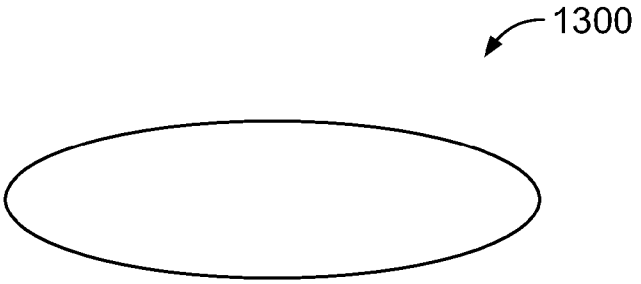

FIG. 19

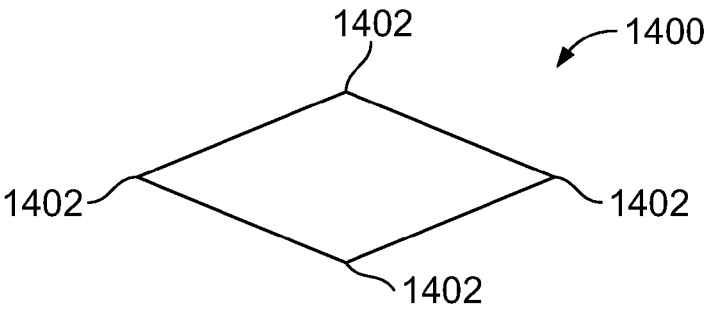

FIG. 20

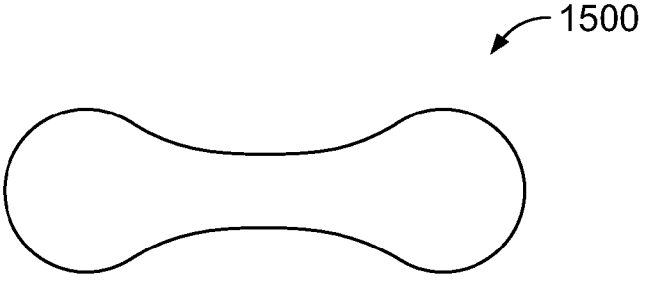

FIG. 21

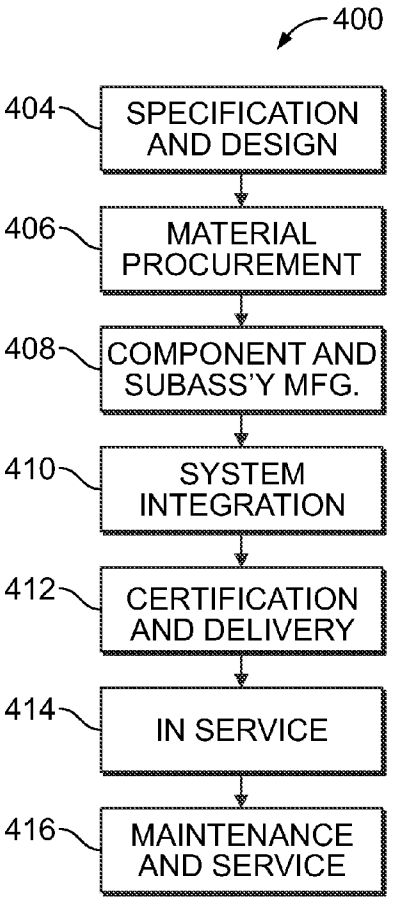
400
404
SPECIFICATION AND DESIGN
406
MATERIAL PROCUREMENT
408
COMPONENT AND SUBASS'Y MFG.
410
SYSTEM INTEGRATION
412
CERTIFICATION AND DELIVERY
414
IN SERVICE
416
MAINTENANCE AND SERVICE

FIG. 22

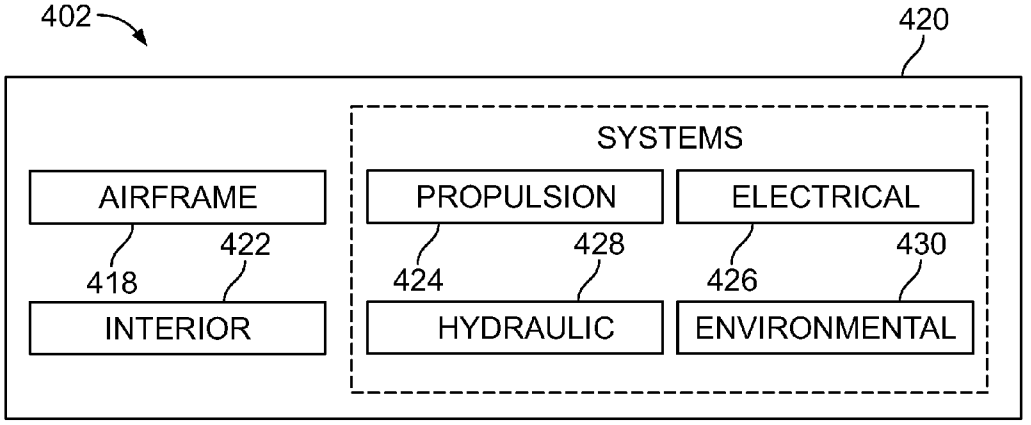
402
420
SYSTEMS
AIRFRAME
PROPULSION
ELECTRICAL
418
422
424
428
426
430
INTERIOR
HYDRAULIC
ENVIRONMENTAL

FIG. 23

SYSTEM AND METHOD FOR FORMING ELONGATED PERFORATIONS IN AN INNER BARREL SECTION OF AN ENGINE

RELATED APPLICATIONS

[0001] This application is a continuation-in-part of U.S. patent application Ser. No. 14/012,243, entitled "System and Method for Forming Perforations in a Barrel Section," filed Aug. 28, 2013, which is hereby incorporated by reference in its entirety.

FIELD OF THE DISCLOSURE

[0002] Embodiments of the present disclosure generally relate to production of acoustic treatment of structures and, more particularly, to the forming of acoustic perforations in an engine inlet barrel section.

BACKGROUND

[0003] Commercial airliners are required to meet certain noise standards such as during takeoff and landing. A large portion of the noise produced by a commercial airliner during takeoff and landing is generated by gas turbine engines commonly used on airliners. Known methods for reducing the noise level of a gas turbine engine include acoustically treating the engine inlet of the engine nacelle. In this regard, the inner barrel section of a gas turbine engine inlet may be provided with a plurality of relatively small perforations formed in the walls of the inner barrel section. The perforations absorb some of the noise that is generated by fan blades rotating at high speed at the engine inlet, and thereby reduce the overall noise output of the gas turbine engine.

[0004] Conventional methods for forming perforations in acoustic structures such as the barrel section include forming the inner wall of the barrel section as a separate component, followed by forming the perforations in the inner wall. The inner wall may then be assembled with other components that make up the barrel section, which is then assembled with the nacelle of the gas turbine engine. Unfortunately, such conventional methods for forming acoustic structures include operations that may result in the blockage of some of the perforations after the perforations have been formed.

[0005] Conventional methods for forming acoustic structures may also result in missing perforations. Such blocked perforations or missing perforations may reduce the percent-open-area (POA) of the inner wall (e.g., the total area of the perforations as a percentage of the surface area of the inner wall) which is a characteristic of acoustic structures for measuring their overall effectiveness in absorbing or attenuating noise. Furthermore, conventional methods of forming perforations in acoustic structures are time-consuming processes that add to the production schedule and cost.

[0006] Additionally, known systems and methods for forming acoustic structures include forming numerous round holes within an inner barrel. In general, the formation of round holes is simple and effective. However, round holes within an inner barrel may not exhibit acoustic properties that are sufficient to efficiently reduce sound within a structure, device, or component. For example, a pattern of circular holes within the inlet barrel typically depends on a size and nature of the components within an acoustic inlet barrel. For each different acoustic inlet barrel, a unique pattern of circular holes is first determined and then formed. As such, a formed acoustic inlet barrel is typically designed for a particular structure and may not be substituted for another structure having different properties.

[0007] A need exists for a system and method for forming perforations in an acoustic structure that minimizes, eliminates, or otherwise reduces the occurrence of blocked or missing perforations, and which may be performed in a timely and cost-effective manner. Further, a need exists for a system and method for efficiently forming perforations within an acoustic structure. Moreover, a need exists for a system and method of manufacturing a complex geometric pattern of perforations on an acoustic inlet barrel of an aircraft engine, or other such structure.

SUMMARY OF THE DISCLOSURE

[0008] The above-noted needs associated with forming perforations in an acoustic structure such as an engine inlet are specifically addressed and alleviated by the present disclosure which provides a forming system that may include a plurality of robotic drilling units. Each one of the robotic drilling units may include a drill end effector positioned inside a barrel section of an engine inlet. The barrel section may be configured as a composite sandwich structure having an inner face sheet. The robotic drilling units may be operable in synchronized movement with one another to drill a plurality of perforations into the inner face sheet using the drill end effectors in a manner providing a predetermined percent-open-area of the inner face sheet.

[0009] Also disclosed is a method of fabricating an engine inlet. The method may include providing an engine inlet inner barrel section configured as a composite sandwich structure having an inner face sheet, a core, and an outer face sheet. The method may further include robotically drilling a plurality of perforations in the inner face sheet after final cure of the composite sandwich structure. The method may additionally include forming the plurality of perforations in a quantity providing a predetermined percent-open-area of the inner face sheet.

[0010] In a further embodiment, disclosed is a method of fabricating an engine inlet including the step of providing an engine inlet inner barrel section configured as a one-piece composite sandwich structure having an inner face sheet, an outer face sheet, and a honeycomb core. The composite sandwich structure may be formed in a single stage cure wherein the inner face sheet, the core, and the outer face sheet may be co-cured and/or co-bonded in a single operation. The method may include drilling, using a plurality of robotic drilling units, a plurality of perforations in the inner face sheet after final cure of the composite sandwich structure. The method may further include operating the plurality of robotic drilling units in synchronized movement with one another to simultaneously drill the plurality of perforations. The method may also include forming the plurality of perforations in a quantity providing a predetermined percent-open-area of the inner face sheet.

[0011] Certain embodiments of the present disclosure provide an engine component, such as an acoustic inlet barrel of an engine. The acoustic inlet barrel may include an inner barrel configured to provide a boundary for directing airflow through the engine. The inner barrel may include an inner face sheet separated from an outer face sheet by an acoustic core. The inner face sheet may include a plurality of elongated, non-circular perforations. Optionally, embodiments of the

present disclosure may be used with various other components of an engine, such as a translating sleeve, inner walls, and the like.

[0012] Each of the perforations may be elongated with respect to a longitudinal axis. The longitudinal axis may align with a flow contour line of the airflow through the engine.

[0013] At least one of the perforations may be shaped as an elongated slot. In at least one other embodiment, one or more of the perforations may be shaped as a teardrop, ellipse, dogbone, or the like.

[0014] Certain embodiments of the present disclosure provide a method of forming an acoustic inlet barrel of an engine. The method may include sandwiching an acoustic core between an inner barrel and an outer barrel, and forming a plurality of elongated, non-circular perforations in at least a portion of the inner barrel. The forming operation may include using at least one robotic forming unit to elongate each of the perforations with respect to a longitudinal axis.

[0015] Certain embodiments of the present disclosure provide a method of forming a component of an engine, such as an acoustic inlet barrel of the engine. The method may include sandwiching an acoustic core between an inner section and an outer section of the component, and forming a plurality of elongated, non-circular perforations in at least a portion of the inner section.

[0016] Certain embodiments of the present disclosure provide a forming system that may include at least one robotic forming unit including at least one end effector positioned inside a barrel section configured as a composite sandwich structure having an inner face sheet. The robotic forming unit(s) is operable to form a plurality of elongated, non-circular perforations into the inner face sheet using the end effector(s) to provide a predetermined percent-open-area of the inner face sheet. The robotic forming unit(s) may be further configured to index a pattern of perforations to one or more cell walls of a honeycomb core of the composite sandwich structure, form the hole pattern in the inner face sheet such that the perforations are located at a spaced distance from the cell walls of the honeycomb core, and/or form the perforations such that the percent-open-area in one section of the inner face sheet is different than the percent-open-area in another section of the inner face sheet.

[0017] The features, functions and advantages that have been discussed can be achieved independently in various embodiments of the present disclosure or may be combined in yet other embodiments, further details of which can be seen with reference to the following description and drawings below.

BRIEF DESCRIPTION OF THE DRAWINGS

[0018] These and other features of the present disclosure will become more apparent upon reference to the drawings wherein like numbers refer to like parts throughout and wherein:

[0019] FIG. **1** is a perspective illustration of an aircraft.

[0020] FIG. **2** is a perspective illustration of a nacelle of a gas turbine engine of the aircraft of FIG. **1**.

[0021] FIG. **3** is a perspective illustration of an inner barrel section of an engine inlet of the gas turbine engine of FIG. **2**.

[0022] FIG. **4** is a cross-sectional illustration of a leading edge of the engine inlet of the gas turbine engine of FIG. **2**.

[0023] FIG. **5** is a perspective illustration of an embodiment of a forming system for forming perforations in a barrel section.

[0024] FIG. **6** is a perspective illustration of the forming system with the barrel section shown in phantom lines to illustrate a plurality of robotic drilling units of the forming system.

[0025] FIG. **7** is a side view of the forming system.

[0026] FIG. **8** is the top view of the forming system.

[0027] FIG. **9** is a side view of one of the robotic drilling units forming a perforation pattern along an inner face sheet of the inner barrel section.

[0028] FIG. **10** is a perspective illustration of a drill end effector forming a perforation in an inner face sheet of a composite sandwich structure of the inner barrel section.

[0029] FIG. **11** is a cross sectional illustration taken along line **11** of FIG. **10** and illustrating a drill bit of the drill end effector drilling a perforation in the inner face sheet of the composite sandwich structure.

[0030] FIG. **12** is a block diagram of an embodiment of the forming system.

[0031] FIG. **13** is an illustration of a flow chart including one or more operations that may be implemented in a method of fabricating an engine inlet.

[0032] FIG. **14** illustrates an interior face view of an inner face sheet having a plurality of elongated perforations, according to an embodiment of the present disclosure.

[0033] FIG. **15** illustrates an interior face view of an inner face sheet having a plurality of elongated perforations, according to an embodiment of the present disclosure.

[0034] FIG. **16** illustrates an interior face view of an inner face sheet having a plurality of elongated perforations, according to an embodiment of the present disclosure.

[0035] FIG. **17** illustrates a perspective interior view of an acoustic inlet barrel, according to an embodiment of the present disclosure.

[0036] FIG. **18** illustrates an interior face view of a perforation formed in an inner face sheet, according to an embodiment of the present disclosure.

[0037] FIG. **19** illustrates an interior face view of a perforation formed in an inner face sheet, according to an embodiment of the present disclosure.

[0038] FIG. **20** illustrates an interior face view of a perforation formed in an inner face sheet, according to an embodiment of the present disclosure.

[0039] FIG. **21** illustrates an interior face view of a perforation formed in an inner face sheet, according to an embodiment of the present disclosure.

[0040] FIG. **22** is a flow diagram of an aircraft manufacturing and service methodology.

[0041] FIG. **23** is a block diagram of an aircraft.

DETAILED DESCRIPTION OF THE DISCLOSURE

[0042] The foregoing summary, as well as the following detailed description of certain embodiments will be better understood when read in conjunction with the appended drawings. As used herein, an element or step recited in the singular and preceded by the word "a" or "an" should be understood as not necessarily excluding the plural of the elements or steps. Further, references to "one embodiment" are not intended to be interpreted as excluding the existence of additional embodiments that also incorporate the recited features. Moreover, unless explicitly stated to the contrary, embodiments "comprising" or "having" an element or a plurality of elements having a particular property may include additional elements not having that property.

[0043] Certain embodiments of the present disclosure provide systems and methods for forming noise abatement structures having non-circular perforations, such as slots, for example. The non-circular perforations may be formed through use of a plurality of robots and/or drill or mill end effectors. In at least one embodiment, the non-circular perforations may be formed into an inner face sheet of an acoustically treated structure, such as an acoustic inlet barrel of an aircraft engine. Certain embodiments of the present disclosure provide systems and methods for creating a plurality of non-circular perforations on a structure having a complex curvature, such as an acoustically-treated inner barrel of an acoustic inlet barrel of an aircraft engine.

[0044] A face sheet may include a single ply of material, or multiple plies of material. For example, the face sheet may include multiple sheets or plies of material that are laminated together.

[0045] Certain embodiments of the present disclosure provide an acoustic engine inlet inner barrel that may include an inner portion having a plurality of perforations. Each of the perforations may be elongated along an axis. Each perforation may be formed as a slot, tear drop, ellipse, diamond, or various other elongated shapes. The axis may be substantially parallel to a flow contour line, which may be uniform or non-uniform. The inner barrel may be integrally formed as a single piece.

[0046] Certain embodiments of the present disclosure provide a method of creating perforations on an interior of a curved structure that may include loading a program into one or more robots to carve non-circular perforations. Each of the non-circular perforations may be elongated in a first direction. The direction may be parallel to flow contours along a surface of the curved structure.

[0047] Embodiments of the present disclosure provide structures having improved acoustic performance and aerodynamics (for example, the non-circular holes may be aligned with airflow that may not be perfectly straight). Further, embodiments of the present disclosure provide efficient manufacturing systems and methods of forming perforations in composite material. Further, embodiments of the present disclosure provide systems and methods of forming non-rectilinear patters of perforations in engine inlet barrels.

[0048] Referring now to the drawings wherein the showings are for purposes of illustrating various embodiments of the present disclosure, shown in FIG. **1** is a perspective illustration of an aircraft **100**. The aircraft **100** may include a fuselage **102** extending from a nose to an empennage **104**. The empennage **104** may include one or more tail surfaces for directional control of the aircraft **100**. The aircraft **100** may include a pair of wings **106** extending outwardly from the fuselage **102**.

[0049] In FIG. **1**, the aircraft **100** may include one or more propulsion units which, in an embodiment, may be supported by the wings **106**. Each one of the propulsion units may be configured as a gas turbine engine **108** having a core engine (not shown) surrounded by a nacelle **110**. The nacelle **110** may include an engine inlet **114** and a fan cowl **118** surrounding one or more fans (not shown) mounted on a forward end (not shown) of the core engine. The nacelle **110** may have an exhaust nozzle **112** (e.g., a primary exhaust nozzle and a fan nozzle) at an aft end (not shown) of the gas turbine engine **108**.

[0050] FIG. **2** illustrates an embodiment of a gas turbine engine **108** having an engine inlet **114**. The engine inlet **114** may include a leading edge **116** and an inner barrel section **120** located aft of the leading edge **116** of the engine inlet **114**. The inner barrel section **120** may provide a boundary surface or wall for directing airflow (not shown) entering the engine inlet **114** and passing through the gas turbine engine **108**. The inner barrel section **120** may be located in relatively close proximity to one or more fans (not shown). In this regard, the inner barrel section **120** may also be configured to serve as an acoustic structure having a plurality of perforations in an inner face sheet of the inner barrel section **120** for absorbing noise generated by the rotating fans and/or noise generated by the airflow entering the engine inlet **114** and passing through the gas turbine engine **108**.

[0051] As described below, the total area of the perforations in the inner face sheet may be expressed as a percent-open-area which represents the total area of the perforations as a percentage of the surface area of the inner face sheet. The percent-open-area may be a characteristic for measuring the overall effectiveness or acoustic-attenuating capability of the inner barrel section **120**. During the design and/or development of the aircraft **100**, a predetermined percent-open-area may be selected for the inner barrel section **120** to meet acoustic performance requirements of the engine inlet **114**.

[0052] FIG. **3** is a perspective illustration of an embodiment of an inner barrel section **120** of an engine inlet **114**. In the embodiment shown, the barrel section **120** may have a diameter (not shown) of up to 5-8 feet or larger, and a length (not shown) extending from an aft edge **126** to a forward edge **124** of up to 2-3 feet or longer. However, the barrel section **120** may be provided in any size, shape, and configuration, without limitation. The inner barrel section **120** may be formed as a composite sandwich structure **122** having an inner face sheet **134** and an outer face sheet **132** separated by a core **128**. The inner face sheet **134** and/or the outer face sheet **132** may be formed of composite material including fiber-reinforced polymeric matrix material such as graphite-epoxy, fiberglass-epoxy, or other composite material. Alternatively, the inner face sheet **134** and/or the outer face sheet **132** may be formed of metallic material such as titanium, steel, or other metallic materials or combinations of materials. The core **128** may include a honeycomb core having a plurality of cells **130** oriented generally transverse to the inner face sheet **134** and outer face sheet **132**. The core **128** may be formed of metallic material and/or non-metallic material and may include aluminum, titanium, aramid, fiberglass, or other core materials.

[0053] In an embodiment, the engine inlet **114** may include a one-piece inner barrel section **120**. The inner barrel section **120** may be fabricated from raw materials (not shown) and assembled and cured in one or more stages. For example, the inner face sheet **134** and the outer face sheet **132** may be separately formed by laying up dry fiber fabric (not shown) or resin-impregnated ply material (for example, pre-preg) on separate layup mandrels (not shown) and separately cured, followed by bonding the inner face sheet **134** and the outer face sheet **132** to the core **128**. Alternatively, the inner barrel section **120** may be fabricated in a single-stage cure process in which the inner face sheet **134** may be laid up on a layup mandrel (not shown), after which the core **128** may be laid up over the inner face sheet **134**, followed by laying up the outer face sheet **132** over the core **128**. The layup assembly (not shown) may be cured in a single stage, after which a forming system disclosed herein may be implemented for forming perforations in the inner face sheet **134**.

[0054] In at least one embodiment, the forming system may be implemented for forming a plurality of perforations in the inner face sheet **134** of the assembled barrel section **120**. The perforations may be non-circular. For example, the perforations may be formed as elongated structures, such as slots, elliptical openings, diamond-shaped openings, dogbone-shaped openings, and/or the like. In at least one embodiment, the forming system may include a plurality of robotic drilling units positioned inside the barrel section **120** for robotically drilling a plurality of the perforations in the inner face sheet **134** after final cure of the composite sandwich structure **122**. The perforations may be formed in a size and quantity to provide a predetermined percent-open-area for the inner barrel section **120** to allow the inner barrel section **120** to meet acoustic performance requirements of the engine inlet **114**.

[0055] In FIG. **3**, the inner barrel section **120** may include a unitary structure having a closed shape with a generally cylindrical configuration. However, in at least one other embodiment, the inner barrel section **120** may be formed as multiple segments (not shown) assembled together to form a closed shape. The inner barrel section **120** may be provided in a contoured cross-sectional shape (not shown) to promote airflow through the gas turbine engine **108**. In this regard, when viewed along a circumferential direction, the inner barrel section **120** may have a cross section that may be complexly curved and may be formed complementary to the shape of the engine inlet **114** leading edge **116** at a forward edge **124** of the inner barrel section **120**, and complementary to the shape of the interior nacelle surfaces (not shown) aft of the inner barrel section **120**. However, the inner barrel section **120** may be provided in any shape including a simple cylindrical shape and/or a conical shape.

[0056] FIG. **4** is a cross-sectional illustration of the leading edge **116** of the engine inlet **114** showing the composite sandwich construction including the circumferential inner face sheet **134**, the circumferential outer face sheet **132**, and the core **128** separating the inner face sheet **134** and outer face sheet **132** of the barrel section **120**. The forward edge **124** of the inner barrel section **120** may be coupled to or may interface with the engine inlet **114** leading edge **116**. The aft edge **126** of the inner barrel section **120** may be coupled to or may interface with the nacelle interior (not shown). In the embodiment shown, the inner face sheet **134**, the core **128**, and the outer face sheet **132** may have a complexly-curved cross sectional shape to promote efficient airflow through the nacelle **110**.

[0057] FIG. **5** is an illustration of an embodiment of a forming system **200** as may be implemented for forming perforations in a barrel section, such as the inner barrel section **120** of the engine inlet **114** of the gas turbine engine **108** (shown in FIG. **3**). However, the forming system **200** may be implemented for forming perforations in any type of barrel structure for any application, without limitation. For example, the forming system **200** may be implemented for forming perforations in a barrel section of any one of a variety of different types of commercial, civilian, and military aircraft. Furthermore, the forming system **200** may be implemented for forming perforations in the barrel section of a gas turbine engine of rotorcraft, hovercraft, or in any other vehicular or non-vehicular application in which a predetermined quantity of acoustic perforations are desired for acoustic attenuating purposes.

[0058] In FIG. **5**, the forming system **200** is shown mounted within an interior of the barrel section **120**. The forming system **200** may include robotic forming units **208** that are configured to form perforations in a barrel section **120** according to embodiments of the present disclosure. For example, the robotic forming units **208** may be configured to provide a predetermined percent-open-area of the inner face sheet **134** of the barrel section **120**. As indicated above, the predetermined percent-open-area **144** may be determined during the design and/or development of the aircraft **100** (shown in FIG. **1**) to meet acoustic performance requirements of the engine inlet **114**. The forming system **200** is configured to consistently form perforations in the inner face sheet **134** of the composite sandwich structure **122** barrel sections **120** to provide a predetermined percent-open-area in the inner face sheet **134**. In this regard, the forming system **200** advantageously overcomes the drawbacks associated with conventional methods for forming perforations in conventional inner barrel sections such as the above-mentioned drawbacks associated with blocked perforations due to subsequent processing of a conventional inner barrel section in a conventional multi-stage forming process, and/or due to missing perforations (not shown) during conventional perforating of the inner skin of a conventional inner barrel section. Such blocked perforations or missing perforations may reduce the predetermined percent-open-area of the inner skin of the conventional inner barrel section which may otherwise reduce the acoustic performance of the engine inlet **114**.

[0059] In FIG. **5**, a plurality of robotic forming units **208** (for example, two robotic forming units **208**, three robotic forming units **208**, etc.) may be supported on a system base **202**. Each one of the robotic forming units **208** may include an end effector **234**, such as a drill end effector, a mill end effector, or the like. In at least one embodiment, the system base **202** may include a relatively rigid structure and a tooling fixture, a shop floor, or a table configured to support the plurality of robotic forming units **208**. In addition, the system base **202** may be configured to support the barrel section **120**. However, the forming system **200** may be provided in another embodiment in which the plurality of robotic forming units **208** are supported by a structure that is located separate from the barrel section **120**. For example, the plurality of robotic forming units **208** may be suspended over the inner barrel section **120** such as by an overhead fixture (not shown) in a manner such that the end effectors **234** may be positioned within the interior of the barrel section **120**, and/or the plurality of robotic forming units **208** may be mounted inside or outside of the barrel section **120**.

[0060] FIG. **6** is a perspective illustration of the plurality of robotic forming units **208** positioned on the system base **202** and mounted within relatively close proximity to one another such that the barrel section **120** circumscribes the plurality of robotic forming units **208** when the barrel section **120** is mounted to the system base **202**. Although four (4) robotic forming units **208** are shown, any number may be provided. In an embodiment, the robotic forming units **208** may be mounted in an array. For example, each one of the robotic forming units **208** may include a forming unit base **212** (such as shown in FIG. **7**). The forming unit bases **212** may be mounted to the system base **202** in a circular array **206** (as shown in FIG. **8**) such that when the barrel section **120** is mounted to the system base **202**, each one of the forming unit bases **212** is positioned at substantially the same distance from the inner face sheet **134** of the barrel section **120**.

[0061] FIG. **7** is a side view of an embodiment of the forming system **200**. The barrel section **120**, shown in phantom

lines, may be supported on one fixture **204** or multiple fixtures **204**. The fixtures **204** may include spacers sized and configured to position the barrel section **120** at a vertical location that is complementary to the movement capability of the end effectors **234** of the robotic forming units **208**. In this regard, the fixtures **204** may be configured such that the end effectors **234** may form perforations (such elongated, non-circular perforations) in the inner face sheet **134** of the barrel section **120** at any vertical location between the forward edge **124** of the barrel section **120** and the aft edge **126** of the barrel section **120**. Each of the fixtures **204** may include a rigid material and may be configured as simple blocks (not shown) formed of metallic or polymeric material and which may be fixedly coupled to the system base **202**. The fixtures **204** may extend vertically along any portion of the height of the barrel section and horizontally along any portion of the circumference of the barrel section **120**.

[0062] FIG. **8** is a top view of the forming system **200** illustrating an arrangement of the robotic forming units **208**. Each one of the robotic forming units **208** may include a robotic arm assembly **210** having an end effector **234** mounted on an end of the robotic arm assembly **210**. The robotic forming units **208** may be mounted such that forming unit bases **212** are positioned adjacent to a center of the array of the robotic forming units **208**. In at least one embodiment, the forming system **200** may include a single robotic forming unit **208** or a plurality of robotic forming units **208**. For example, the forming system **200** may include two (2) or more robotic forming units **208** having forming unit bases **212** which may be arranged at a predetermined spacing relative to one another, such as a substantially equiangular spacing relative to one another.

[0063] Referring still to FIG. **8**, the plurality of robotic forming units **208** may be configured (for example, programmed) to drill perforations (such as elongated, non-circular perforations) within substantially equivalent arc segments **142** of the barrel section **120**. For example, for the embodiment shown, the plurality of robotic forming units **208** may include four (4) robotic forming units **208**. The forming unit bases **212** may be arranged such that the forming unit bases **212** are positioned at an angular spacing of approximately ninety degrees relative to one another. In at least one embodiment, each one of the robotic forming units **208** may be configured to form perforations within an approximate ninety-degree arc segment **142** of the barrel section **120**. However, the robotic forming units **208** may be positioned at any location relative to one another and may be configured to form perforations at any circumstantial location or any vertical location of the barrel section **120**.

[0064] In FIG. **8**, the end effector **234** of each one of the robotic forming units **208** may be oriented generally radially outwardly away from the forming unit base **212**. The forming unit bases **212** may be positioned to provide space for movement of the robotic arm assemblies **210** during operation of the forming system **200**. In this regard, the robotic forming units **208** are simultaneously operable in synchronized movement with one another in a manner allowing the end effectors **234** to simultaneously form a plurality of perforations in the barrel section **120**. The robotic forming units **208** may be programmed to avoid collisions with one another and with the barrel section **120** during the synchronized movement with one another.

[0065] FIG. **9** is a side view of one of the robotic forming units **208** showing the barrel section **120** supported on fixtures **204** and illustrating a forming bit **236** of one of the end effectors **234** forming perforations **136** in a predetermined perforation pattern **140** along the inner face sheet **134** of the inner barrel section **120**. In this regard, in at least one embodiment, each one of the robotic forming units **208** may be indexed to the system base **202**. The barrel section **120** may also be indexed to the system base **202** such as with fixtures **204** to provide a means for the end effector **234** to form perforations **136** within a relatively small positional tolerance relative to a circumferential direction (not shown) of the barrel section **120** and relative to an axial direction (not shown) of the barrel section **120**. However, the barrel section **120** and the robotic forming units **208** may be indexed relative to one another by other means, and are not necessarily limited to being indexed to the system base **202**.

[0066] In FIG. **9**, the robotic forming units **208** may be operated in a manner to form the perforations **136** in the inner face sheet **134** such that a percent-open-area **144** in one section **148** of the inner face sheet **134** is different than the percent-open-area **144** in another section **150** of the inner face sheet **134**. In this regard, the robotic forming units **208** may be programmed to form perforations **136** to provide a greater percent-open-area **144** in a first section **148** of the inner face sheet **134** relative to drilling perforations **136** to provide a lower percent-open-area **144** in a second section **150** of the inner face sheet **134**. For example, the second section **150** with a smaller percent-open-area **144** may be located adjacent to a forward edge **124** and/or an aft edge **126** of the barrel section **120**, and the first section **148** with a larger percent-open-area **144** may be located in an interior region (not shown) of the inner barrel section **120** between the forward edge **124** and the aft edge **126**. However, the robotic forming **208** units may form the perforations **136** such that the percent-open-area **144** in the inner face sheet **134** is different at different circumferential sections (not shown) of the barrel section **120**, or the percent-open-area **144** of the inner barrel section **120** may vary in a different manner than the above-noted embodiments.

[0067] In FIG. **9**, one or more of the robotic forming units **208** may have a six-axis robotic arm assembly **210** which may allow for accurately positioning the end effector **234** at any desired location and orientation along the inner face sheet **134**. As the end effector **234** is positioned and oriented at a desired location of a perforation **136**, the end effector **234** may be moved axially to drive the forming bit **236** into the inner face sheet **134** to form a perforation **136**. After an initial opening is formed, the forming bit **236** may radially shift through a radial arc to form the elongated perforation **136**. In this manner, the forming bit **236** may be a drill or milling bit that may be configured to rotate about a central longitudinal axis and radially shift in order to form the elongated perforation **136**. In at least one other embodiment, the forming bit **236** may be sized and shaped as a desired shape of an elongated perforation **136** and puncture the inner face sheet **134** to form the elongated perforation **136**. Alternatively, the end effector **234** may be positioned at a desired location of a perforation **136** on the inner face sheet **134**, and the end effector **234** may axially drive the forming bit **236** along a direction of the forming bit axis **238** to drill the perforation **136** in the inner face sheet **134**. In at least one embodiment, the six-axis robotic arm assembly **210** may include a first arm **220** which may be attached to the forming unit base **212** at a shoulder joint **216**. The first arm **220** may be attached to a

second arm **226** at an elbow joint **222**. The second arm **226** may be attached to the end effector **234** at a wrist joint **230**.

[0068] In FIG. **9**, the forming unit base **212** may be configured to rotate about a vertical base axis **214** relative to the system base **202**. The first arm **220** may be configured to rotate about a shoulder axis **218** of the shoulder joint **216** coupling the first arm **220** to the forming unit base **212**. The second arm **226** may be configured to rotate about an elbow axis **224** of the elbow joint **222** coupling the second arm **226** to the first arm **220**. A portion of the second arm **226** may also be configured to swivel about a second arm axis **228** extending along a direction from the elbow joint **222** to the wrist joint **230**. The end effector **234** may be configured to rotate about a wrist axis **232** of the wrist joint **230**. In addition, the end effector **234** may be configured to rotate about an end effector axis **235** which may be generally parallel to the forming bit axis **238**. In an optional embodiment, the end effector **234** may be configured to linearly translate the forming bit **236** along a forming bit axis **238** such as when drilling a portion of perforation **136** in the inner face sheet **134**.

[0069] In FIG. **9**, the robotic arm assembly **210** is shown in a six-axis embodiment. However, the robotic arm assembly **210** may be provided in alternative arrangements. For example, the robotic arm assembly **210** may be provided in a 3-axis embodiment, a 4-axis embodiment, or a **5**-axis embodiment. In addition, the robotic arm assembly **210** may be provided in an embodiment having more than six (6) axes. Furthermore, the robotic arm assembly **210** may be configured as a motion control system (not shown), a rigid frame (not shown) having linear axes along which the end effector is movable, or any other type of motion control device for controlling an end effector **234** for forming the perforations **136**. In addition, each robotic arm assembly **210** may include more than one end effector **234**. Furthermore, each end effector **234** may have more than one forming bit **236** for simultaneously forming perforations **136**.

[0070] FIG. **10** shows an end effector **234** forming a perforation **136** in the inner face sheet **134** of a composite sandwich structure **122** of the inner barrel section **120**. Advantageously, the forming system **200** is configured to accurately and rapidly place the end effector **234** for forming perforations **136** in a predetermined perforation pattern, such as the pattern **140** shown in FIG. **9**. For example, in at least one embodiment, each one of the end effectors **234** of a robotic forming unit **208** may be configured to form up to three (3) or more perforations **136** per second, per end effector **234**. In at least one embodiment, the end effector **234** may be provided with a forming bit **236** configured to form elongated, non-circular acoustic perforations **136** having a length of approximately 0.2 inch, 0.3 inch, 0.4 inch, or 0.5 inch. Optionally, the perforations **136** may be longer or shorter than noted.

[0071] As shown, the end effector **234** may initially form a portion of the perforation **136** through a drilling operation. For example, the end effector **234** may be rotated about its central longitudinal axis and urged into the inner face sheet **134**. After the initial portion is formed through the drilling operation, the forming system **200** may be rotated in a radial sweeping direction A to elongate the perforation **136** starting from the initial drilled opening to an end point, as determined by the forming program. In at least one other embodiment, the forming system **200** may remain in a fixed position, while the barrel section **120** is rotated about a central axis relative to the forming system **200**.

[0072] In at least one embodiment, for forming perforations **136** in a composite inner face sheet **134**, the end effector **234** may be configured to drive the forming bit **236** at a feed rate of approximately 20-60 inches per minute, and at rotational speeds of between approximately 20,000 to 40,000 rpm, although larger or smaller feed rates and larger or smaller rotational speeds may be selected based on the material being drilled and the composition of the forming bit **236**. The forming bit **236** feed rate and the forming bit **236** rotational speed may be controlled to minimize forming bit **236** wear, and such that the perforations **136** may meet tight tolerances for size, shape, and other hole parameters. Significantly, each robotic forming unit **208** may be configured to quickly and accurately form perforation patterns at a relatively small center-to-center positional tolerance (that is, perforation-to-perforation) such as a center-to-center positional tolerance of approximately 0.010 inch or less. However, the center-to-center positional tolerance may be greater than 0.010 inch, such as up to approximately 0.050 inch or greater.

[0073] One or more of the end effectors **234** may include a vacuum attachment **240** for removing debris (not shown) such as dust and chips that may be generated as the perforations **136** are formed. The vacuum attachment **240** may have a hollow (not shown) or open portion (not shown) that may be positioned around the forming bit **236** and may be placed adjacent to or in contact with the inner face sheet **134** when the forming bit **236** contacts the inner face sheet **134** and forms a perforation **136**. The vacuum attachment **240** may include a vacuum port **242** for connection to a vacuum source (not shown) using a vacuum hose (not shown) for drawing a vacuum **244** on the vacuum attachment **240** for drawing debris (not shown) from the area surrounding the perforation **136**.

[0074] In at least one embodiment, the forming system **200** may be provided with an automated bit changer (not shown) for changing the forming bits **236** using robotic control. In this manner, worn forming bits **236** may be replaced after forming a predetermined quantity of perforations **136**. For example, an automated bit changer (not shown) may replace each forming bit **236** after forming anywhere from approximately 1,000 to 30,000 perforations **136**, although the forming bits **236** may be replaced after forming a smaller or larger quantity of perforations **136** than the above-noted range. Depending upon the size (for example, diameter and height) of the inner barrel section **120** and the total quantity of robotic forming units **208** that are used, each end effector **234** may undergo 1 to 20 or more forming bit changes per barrel section **120**, for example.

[0075] Referring again to FIG. **9**, in at least one embodiment, the end effectors **234** may be controlled to form perforations **136** in a perforation pattern **140** of vertical rows along a height of the barrel section **120**. In this regard, each end effector **234** may form a vertical row of perforations **136**, and the end effector **234** may be rotated about the vertical base axis **214** to allow the end effector **234** to form another vertical row of perforations **136** adjacent to the previously-formed vertical row of perforations **136**. The end effectors **234** may also be controlled to form perforations **136** in horizontal rows (not shown), or in any other direction or combination of directions. As indicated above, the robotic arm assemblies **210** may be operated in a synchronized manner such that the end effectors **234** are maintained at a generally equiangular spacing from one another during the simultaneous drilling of perforations **136** in the inner face sheet **134** of the barrel

section **120**. For example, for a forming system **200** having four (4) robotic forming units **208**, the end effectors **234** may be maintained at an angular separation of approximately ninety (90) degrees from each other during the simultaneous forming of perforations **136** in the inner face sheet **134**.

[0076] FIG. **11** is a cross sectional view of a forming bit **236** of the end effector **234** forming a perforation **136** in the inner face sheet **134** of a composite sandwich structure **122**. In an embodiment, the end effector **234** may include a forming stop (not shown) to control a depth **138** at which the forming bit **236** extends into the composite sandwich structure **122**, and minimize the depth **138** of the forming bit **236** into the core **128** material. Furthermore, a forming stop (not shown) may stabilize the end effector **234** when forming the perforation **136** to prevent lateral movement of the forming bit **236** relative to the perforation **136**, and which may advantageously avoid a non-conformance regarding the positional tolerance, arcuate tolerance, or other tolerance parameters of the perforation **136**. In at least one embodiment, each end effector **234** may include a non-contact method of gauging the depth **138** at which each perforation **136** is drilled such as by using a laser device (not shown), an ultrasonic device (not shown), and other non-contact device. The depth **138** of forming may also be controlled by a controller (not shown) controlling the end effector **234**.

[0077] FIG. **12** is a block diagram of an embodiment of a forming system **200**. The forming system **200** may include a plurality of robotic forming units **208**. Each one of the robotic forming units **208** may include a robotic arm assembly **210** as described above. An end effector **234** may be coupled to the end of each one of the robotic arm assemblies **210** of each robotic forming unit **208**. The robotic forming units **208** may be simultaneously operable in synchronized movement with one another such that the end effectors **234** may simultaneously form a plurality of perforations **136** in the barrel section **120**.

[0078] In FIG. **12**, the barrel section **120** may include an inner barrel section **120** of an engine inlet **114** such as that of a gas turbine engine **108** (shown in FIG. **3**), as indicated above. In at least one embodiment, the barrel section **120** may be formed as a composite sandwich structure **122**. The composite sandwich structure **122** may have an outer face sheet **132**, a core **128**, and an inner face sheet **134** which may be assembled or bonded together to form a one-piece engine inlet inner barrel section **120**. The forming system **200** may rapidly and accurately form a plurality of perforations **136** in a predetermined perforation pattern of perforations **136** (FIG. **9**) in the inner face sheet **134** to provide a predetermined percent-open-area **144** for the inner barrel section **120** to meet acoustic performance requirements.

[0079] FIG. **13** is an illustration of a flow chart including one or more operations that may be included in a method **300** of fabricating an engine inlet **114** (FIG. **3**). Step **302** of the method may include providing a barrel section **120** (FIG. **3**) such as an inner barrel section **120** (FIG. **3**) of an engine inlet **114** (FIG. **3**). As indicated above, the inner barrel section **120** (FIG. **3**) may be provided as a one-piece composite sandwich structure **122** (FIG. **3**). In such a composite sandwich structure **122** (FIG. **3**), the inner face sheet **134** (FIG. **3**) may be formed of composite material and the outer face sheet **132** (FIG. **3**) may be formed of composite material (for example, fiber-reinforced polymeric matrix material). However, the inner face sheet **134** (FIG. **3**) and/or the outer face sheet **132** (FIG. **3**) may be formed of metallic material, or a combination of metallic material and non-metallic material.

[0080] As indicated above, the core **128** (FIG. **3**) may include honeycomb core formed of metallic material and/or non-metallic material and may include aluminum, titanium, aramid, fiberglass, or other core materials. The engine inlet **114** (FIG. **3**) inner barrel section **120** (FIG. **3**) may be fabricated as a one-piece composite sandwich structure **122** (FIG. **3**) formed in a single-stage cure. As described above, the barrel section **120** (FIG. **3**) may be provided in a single-stage cure wherein the inner face sheet **134** (FIG. **3**), the core **128** (FIG. **3**), and the outer face sheet **132** (FIG. **3**) may be laid up on a layup mandrel, after which heat and/or pressure may be applied to the layup (not shown) for a predetermined time for curing in a single stage.

[0081] Step **304** of the method **300** of FIG. **13** may include mounting and indexing the inner barrel section **120** (FIG. **7**) to a system base **202** (FIG. **7**). In this regard, the inner barrel section **120** (FIG. **7**) may be supported on a plurality of fixtures **204** (FIG. **7**) which may be mounted to the system base **202** (FIG. **7**). The fixtures **204** (FIG. **7**) may fixedly position the inner barrel section **120** (FIG. **7**) on the system base **202** (FIG. **7**) which may comprise a table (not shown), an assembly (not shown), or other relatively rigid structure configured to support the inner barrel section **120** (FIG. **7**) and prevent movement thereof during the drilling of the perforations **136** (FIG. **9**) in the inner barrel section **120** (FIG. **7**).

[0082] As indicated above, the fixtures **204** may be positioned at spaced intervals around a perimeter (not shown) of the inner barrel section **120** such as along the aft edge **126** (FIG. **9**) or forward edge **124** (FIG. **9**) of the inner barrel section **120**. The fixtures **204** may include mechanical indexing features (not shown) to index the inner barrel section **120** to the fixtures **204**. A laser system (not shown) may be implemented to aid in positioning the inner barrel section **120** relative to the fixtures **204**. The inner barrel section **120** may be mechanically coupled to the fixtures **204** to rigidly clamp the inner barrel section **120** in position.

[0083] Step **306** of the method **300** of FIG. **13** may include indexing the plurality of robotic forming units to the system base **202** (FIG. **7**) as shown in FIG. **7**. In at least one embodiment, each one of the plurality of robotic forming units **208** (FIG. **7**) may have a forming unit base **212** (FIG. **7**) that may be directly mounted to the system base **202** and indexed to the system base **202** and/or to the fixtures **204** (FIG. **7**) supporting the inner barrel section **120** (FIG. **7**). For example, the forming unit bases **212** of the robotic forming units **208** may be mounted to the system base **202** and may be located inside the inner barrel section **120** as shown in FIG. **7**. Alternatively, the forming unit bases **212** may be located outside of the inner barrel section **120** and the end effectors **234** (FIG. **7**) of the robotic arm assemblies **210** (FIG. **7**) may extend inside the inner barrel section **120** to form the perforations **136** (FIG. **9**). In a further embodiment, the robotic forming units **208** may be supported by a structure (not shown) that is located separate from the system base **202** and separate from the barrel section **120**. For example, the forming unit bases **212** of the robotic forming units **208** may be mounted to an overhead fixture (not shown) that may be indexed to the system base **202** and/or to the fixtures **204** supporting the inner barrel section **120**. The end effectors **234** may extend inside the barrel section **120** to drill the perforations **136**.

[0084] Step **308** of the method **300** of FIG. **13** may include acoustically treating the engine inlet **114** (FIG. **9**) by roboti-

cally forming a plurality of perforations **136** (FIG. **9**) into the inner face sheet **134** (FIG. **9**) of the composite sandwich structure **122** (FIG. **9**) engine inlet **114** inner barrel section **120** (FIG. **9**) such as after final cure of the composite sandwich structure **122**. For example, the method **300** may include robotically forming the plurality of perforations **136** in the inner barrel section **120** using a plurality of the robotic forming units **208** (FIG. **9**). The method **300** may include simultaneously forming the plurality of perforations **136** in the inner face sheet **134** using the end effectors **234** (FIG. **9**) to provide a predetermined percent-open-area **144** of the inner face sheet **134**. In an embodiment, each one of the robotic forming units **208** may include a robotic arm assembly **210** (FIG. **9**) configured as a three-axis, four-axis, five-axis, or six-axis arm assembly respectively having three axes, four axe, five axes, and six axes. The robotic arm assemblies **210** may be programmed to move the end effectors **234** in a synchronized manner relative to one another to form the perforations **136** at a relatively rapid rate. For example, each one of the end effectors **234** may be configured to form 2-3 or more perforations **136** per second.

[0085] The method **300** (FIG. **13**) may include forming the perforations **136** (FIG. **9**) in a predetermined perforation pattern **140** (FIG. **9**) in the engine inlet **114** (FIG. **9**) inner barrel section **120** (FIG. **9**) which may have a honeycomb core **128** (FIG. **11**). The robotic forming units **208** (FIG. **9**) may be configured to control the end effectors **234** (FIG. **9**) to form the perforations **136** normal (for example, perpendicular) to the inner face sheet **134** (FIG. **10**). In addition, the robotic forming units **208** may be configured to form the perforations **136** at a spaced distance to the cell walls **131** (FIG. **11**) of the honeycomb core **128**. In this regard, the robotic forming units **208** may be configured to form one or more perforations **136** in each of the cells **130** at a distance from the cell walls **131** to avoid puncturing the cell walls **131**. The robotic forming units **208** may form the perforations **136** in a perforation pattern **140** that may be configured complementary to the geometry and size of the cells **130** of honeycomb core **128**. For example, the perforation pattern **140** (FIG. **9**) may be such that one perforation **136** (FIG. **11**) is formed into each cell **130** (FIG. **11**) such as at an approximate center (not shown) of each cell **130**. However, the perforation pattern **140** may be such that two or more perforations **136** may be formed into each cell **130** of the honeycomb core **128** (FIG. **11**).

[0086] The robotic forming units **208** (FIG. **9**) may be configured to index or position the perforation pattern **140** (FIG. **9**) relative to the cell **130** (FIG. **11**) centers (not shown) or relative to the cell walls **131** (FIG. **11**) of a honeycomb core **128**. For example, for a honeycomb core **128** having a generally uniform arrangement of cells **130** of equal size and shape, the robotic forming units **208** may be configured to establish a location of one of the cell walls **131** in order to index a perforation pattern **140** relative to the locations of the cell **130** of the honeycomb core **128**. After establishing the location of one or more cell walls **131**, the robotic forming units **208** may be configured to form the perforation pattern **140** of perforations **136** in the inner face sheet **134** of the honeycomb core **128** such that each perforation **136** is formed at a predetermined location in each cell **130** such as at a center (not shown) of each cell **130**, or at a predetermined location or spaced distance **146** relative to the cell walls **131** of each cell **130**. The perforation pattern **140** may also be such that multiple perforations **136** may be formed into each cell **130** and may be located at predetermined distances or spaced distances **146** from the cell walls **131** of each cell **130**.

[0087] Advantageously, the robotic forming units **208** (FIG. **9**) may be configured to form perforations **136** (FIG. **9**) within a relatively high positional tolerance (e.g., 0.010 inch on centers) in the hole-to-hole spacing. In addition, as indicated above, each one of the end effectors **234** (FIG. **10**) may include a vacuum attachment **240** (FIG. **10**) configured to be positioned adjacent to or against the inner face sheet **134** during the forming of the perforations **136**. The vacuum attachment **240** may include a vacuum port **242** (FIG. **11**) that may be coupled to a vacuum source (not shown) via a vacuum hose (not shown) to provide a vacuum **244** (FIG. **10**) for suctioning dust, chips, and other debris away from a location where a perforation **136** is being drilled.

[0088] Step **310** of the method **300** of FIG. **13** may include periodically changing the forming bits **236** (FIG. **10**) of the end effectors **234** (FIG. **10**) during the process of forming perforations **136** (FIG. **10**) in the inner barrel section **120** (FIG. **10**). In an embodiment, the method may include robotically changing the forming bits **236** using an automated bit changer (not shown). Forming bits **236** may be replaced after forming a predetermined quantity of perforations **136**. For example, each forming bit **236** may be replaced after forming several thousand or more perforations **136**. The frequency at which the forming bits **236** may be replaced may be affected by the thickness of the inner face sheet **134** (FIG. **11**), the material composition of the inner face sheet **134**, a rotational speed of the forming bit **236**, the feed rate of the forming bit **236**, the material composition of the forming bit **236**, and other factors. In at least one embodiment, the method may include detecting when a forming bit **236** is becoming dull, at which point the method may include replacing the dull forming bit **236** with a new or sharpened forming bit.

[0089] Advantageously, the forming system **200** (FIG. **12**) and method disclosed herein provides for operating a plurality of robotic forming units **208** (FIG. **12**) in a synchronized manner to accurately and rapidly form perforations **136** (FIG. **12**) in the inner face sheet **134** (FIG. **12**) of an inner barrel section **120** (FIG. **12**) with a high degree of repeatability. In addition, the forming system **200** provides a means for forming perforations **136** with a significant reduction in defects and rework commonly associated with conventional methods. In this regard, the forming system **200** and method disclosed herein may avoid the above-mentioned defects of missing perforations (not shown) and/or blocked perforations (not shown) during subsequent processing in a multi-stage barrel section fabrication process (not shown), and the associated reduction in percent-open-area **144** (FIG. **9**) in the inner face sheet **134** of the inner barrel section **120**.

[0090] As indicated above, the percent-open-area **144** (FIG. **9**) of the inner face sheet **134** is the total area of the perforations **136** (FIG. **9**) as a percentage of the surface area (not shown) of the inner face sheet **134** (FIG. **9**) and is a characteristic for measuring the overall effectiveness or acoustic-attenuating capability of the inner barrel section **120** (FIG. **9**). In FIG. **9**, the robotic forming units **208** (FIG. **9**) may be operated in a manner to form perforations **136** to provide a percent-open-area **144** (FIG. **9**) in one section **148** (FIG. **9**) of the inner face sheet **134** that is different than the percent-open-area **144** in another section **150** (FIG. **9**) of the face sheet **134**. For example, in FIG. **9**, a first section **148** of perforations **136** formed in the inner face sheet **134** may have a larger percent-open-area **144** relative to a second section **150** of

perforations **136** which may be located adjacent to a forward edge **124** and/or an aft edge **126** of the barrel section **120**. However, as indicated above, differing sections (not shown) of percent-open-area **144** may be arranged in any manner along the inner face sheet **134** of the inner barrel section **120** (FIG. **9**), and are not limited to the arrangement shown in FIG. **9** or described above.

[0091] FIG. **14** illustrates an interior face view of the inner face sheet **134** having a plurality of elongated perforations **136**, according to an embodiment of the present disclosure. The inner face sheet **134** may be formed of a cured composite material. Alternatively, the face sheet **134** may be formed of a metallic structure. Each perforation **136** may be formed as a non-circular opening formed through the face sheet **134**. For example, the perforations **136** may be formed as elongated slots. In at least one embodiment, the slots **136** may be approximately 0.1 inch long. In at least one another embodiment, the slots **136** may be approximately 0.7 inch long. It is to be understood, however, that the slots may be greater or lesser than 0.1 inch long or greater or lesser than 0.7 inch long.

[0092] The percent-open-area of the face sheet **134** (that is, the area of the face sheet **134** that is occupied by the perforations **136**) may be approximately 30%. Alternatively, the percent-open-area of the face sheet **134** may be greater or lesser than 30%. For example, in at least one embodiment, the percent-open-area may be 15%. In at least one other embodiment, the percent-open-area may be 50%. The percent-open-area may be determined by the size, shape, weight, and other properties of the acoustic inlet barrel. For example, if the acoustic core of the acoustic inlet barrel has relatively large, thick honeycomb cells, the percent-open-area may be increased beyond 30%, as the larger, thicker honeycomb cells may more efficiently absorb sound energy. Conversely, if the acoustic core of the acoustic inlet barrel has smaller cells, the percent-open-area may be less than 30%.

[0093] Overall, the use of elongated perforations **136** allows for simpler, easier, and more efficient manufacturing processes. For example, if it is determined that additional percent-open-area is desired, the elongated perforations **136** may be elongated to a greater length. In contrast, if circular openings were used, an entire hole pattern may need to be determined and recalculated, and an initial face sheet having an undesired hole pattern may need to be discarded.

[0094] As shown, rows **1000**, **1002**, **1004**, **1006**, **1008**, and **1010** of elongated perforations **136** may be offset with respect to one another. For example, perforations **136** in the row **1000** may not be radially aligned (or vertically aligned, as shown in FIG. **14**) with the perforations **136** in the row **1002**. For example, a leading edge **1013***a* of a perforation **136** in the row **1008** may be axially offset with respect to a rear of a leading edge **1013***b* of a perforation **136** in the row **1010**. Further, a spacing **1012** between adjacent perforations **136** in a row may be configured to provide a desired percent-open-area.

[0095] Each of the perforations **136** may be the same size and shape. Alternatively, certain perforations **136** may be sized and shaped differently than other perforations **136**.

[0096] As shown, each perforation **136** may be elongated along or otherwise with respect to a longitudinal axis **1020**, which may generally bisect each perforation into lateral halves. The longitudinal axis **1020** may be substantially parallel to a flow contour line **1030**, which may be uniform or non-uniform. The flow contour line **1030** represents a direction of airflow through an acoustic inlet barrel, for example.

[0097] FIG. **15** illustrates an interior face view of the inner face sheet **134** having a plurality of elongated perforations **136**, according to an embodiment of the present disclosure. The inner face sheet **134** shown in FIG. **15** is similar to the inner face sheet **134** shown in FIG. **14**, except that the perforations **136** with adjacent rows may be radially aligned with one another.

[0098] FIG. **16** illustrates an interior face view of the inner face sheet **134** having a plurality of elongated perforations **136**, according to an embodiment of the present disclosure. The inner face sheet **134** shown in FIG. **15** is similar to the inner face sheet **134** shown in FIG. **14**, except that the perforations **136** in adjacent rows may be offset in an opposite direction.

[0099] Referring to FIGS. **14-16**, the elongated, non-circular perforations **136** may form various other patterns than shown. The perforation pattern **136** may be any pattern desired. In at least one embodiment, each row of perforations may include the same number of perforations **136**. In at least one other embodiment, the number of perforations **136** in at least one row may differ than the number of perforations **136** in other rows.

[0100] FIG. **17** illustrates a perspective interior view of an acoustic inlet barrel **1100**, according to an embodiment of the present disclosure. The acoustic inlet barrel **1100** includes an inner face sheet **1102** having a plurality of elongated perforations **1104**. The perforations **136** may be parallel to or otherwise aligned with a flow contour of airflow that flows from the front **1120** of the acoustic inlet barrel **1100** to a rear **1122** of the acoustic inlet barrel **1100**.

[0101] FIG. **18** illustrates an interior face view of a perforation **1200** formed in an inner face sheet, according to an embodiment of the present disclosure. The perforation **1200** includes an expanded front end **1202** connected to a reduced rear end **1204**. The perforation **1200** may form a teardrop shape.

[0102] FIG. **19** illustrates an interior face view of a perforation **1300** formed in an inner face sheet, according to an embodiment of the present disclosure. The perforation **1300** form a teardrop shape.

[0103] FIG. **20** illustrates an interior face view of a perforation **1400** formed in an inner face sheet, according to an embodiment of the present disclosure. The perforation **1400** may form a diamond shape. The perforation **1400** may have angled corners **1402**. The corners **1402** may have distinct edges, or may be blunted, rounded, or curved.

[0104] FIG. **21** illustrates an interior face view of a perforation **1500** formed in an inner face sheet, according to an embodiment of the present disclosure. The perforation **1500** may have a dogbone or barbell shape.

[0105] Referring to FIGS. **22** and **23**, embodiments of the disclosure may be described in the context of an aircraft manufacturing and service method **400** as shown in FIG. **22** and an aircraft **402** as shown in FIG. **23**. During pre-production, exemplary method **400** may include specification and design **404** of the aircraft **402** and material procurement **406**. During production, component and subassembly manufacturing **408** and system integration **410** of the aircraft **402** takes place. Thereafter, the aircraft **402** may go through certification and delivery **412** in order to be placed in service **414**. While in service by a customer, the aircraft **402** is scheduled for routine maintenance and service **416** (which may also include modification, reconfiguration, refurbishment, and so on).

[0106] Each of the processes of method **400** may be performed or carried out by a system integrator, a third party, and/or an operator (e.g., a customer). For the purposes of this description, a system integrator may include without limitation any number of aircraft manufacturers and major-system subcontractors; a third party may include without limitation any number of venders, subcontractors, and suppliers; and an operator may be an airline, leasing company, military entity, service organization, and so on.

[0107] As shown in FIG. **23**, the aircraft **402** produced by exemplary method **400** may include an airframe **418** with a plurality of systems **420** and an interior **422**. Examples of high-level systems **420** include one or more of a propulsion system **424**, an electrical system **426**, a hydraulic system **428**, and an environmental system **430**. Any number of other systems may be included. Although an aerospace example is shown, the principles of the invention may be applied to other industries, such as the automotive industry.

[0108] Apparatus and methods embodied herein may be employed during any one or more of the stages of the production and service method **400**. For example, components or subassemblies corresponding to production process **408** may be fabricated or manufactured in a manner similar to components or subassemblies produced while the aircraft **402** is in service. Also, one or more apparatus embodiments, method embodiments, or a combination thereof may be utilized during the production stages **408** and **410**, for example, by substantially expediting assembly of or reducing the cost of an aircraft **402**. Similarly, one or more of apparatus embodiments, method embodiments, or a combination thereof may be utilized while the aircraft **402** is in service, for example and without limitation, to maintenance and service **416**.

[0109] As described above, embodiments of the present disclosure provide systems and methods for forming perforations in an acoustic structure that minimize, eliminate, or otherwise reduce the occurrence of blocked or missing perforations, and which may be performed in a timely and cost-effective manner. Further, embodiments of the present disclosure provide systems and methods for efficiently forming perforations within an acoustic structure. Moreover, embodiments of the present disclosure provide systems and methods of manufacturing complex geometric patterns of perforations on an acoustic inlet barrel of an aircraft engine, or other such structure.

[0110] As described above, embodiments of the present disclosure provide systems and methods of forming an acoustic inlet barrel of an engine of an aircraft. Embodiments of the present disclosure may be used with respect to various other components other than acoustic inlet barrels. For example, embodiments of the present disclosure may be used with respect to various other acoustic treatments within propulsion systems, such as translating sleeves, inner walls, and the like. In short, embodiments of the present disclosure are not limited to acoustic inlet barrels.

[0111] While various spatial and directional terms, such as top, bottom, lower, mid, lateral, horizontal, vertical, front and the like may be used to describe embodiments of the present disclosure, it is understood that such terms are merely used with respect to the orientations shown in the drawings. The orientations may be inverted, rotated, or otherwise changed, such that an upper portion is a lower portion, and vice versa, horizontal becomes vertical, and the like.

[0112] As used herein, a structure, limitation, or element that is "configured to" perform a task or operation is particularly structurally formed, constructed, or adapted in a manner corresponding to the task or operation. For purposes of clarity and the avoidance of doubt, an object that is merely capable of being modified to perform the task or operation is not "configured to" perform the task or operation as used herein.

[0113] It is to be understood that the above description is intended to be illustrative, and not restrictive. For example, the above-described embodiments (and/or aspects thereof) may be used in combination with each other. In addition, many modifications may be made to adapt a particular situation or material to the teachings of the various embodiments of the disclosure without departing from their scope. While the dimensions and types of materials described herein are intended to define the parameters of the various embodiments of the disclosure, the embodiments are by no means limiting and are exemplary embodiments. Many other embodiments will be apparent to those of skill in the art upon reviewing the above description. The scope of the various embodiments of the disclosure should, therefore, be determined with reference to the appended claims, along with the full scope of equivalents to which such claims are entitled. In the appended claims, the terms "including" and "in which" are used as the plain-English equivalents of the respective terms "comprising" and "wherein." Moreover, the terms "first," "second," and "third," etc. are used merely as labels, and are not intended to impose numerical requirements on their objects. Further, the limitations of the following claims are not written in means-plus-function format and are not intended to be interpreted based on 35 U.S.C. §112(f), unless and until such claim limitations expressly use the phrase "means for" followed by a statement of function void of further structure.

[0114] This written description uses examples to disclose the various embodiments of the disclosure, including the best mode, and also to enable any person skilled in the art to practice the various embodiments of the disclosure, including making and using any devices or systems and performing any incorporated methods. The patentable scope of the various embodiments of the disclosure is defined by the claims, and may include other examples that occur to those skilled in the art. Such other examples are intended to be within the scope of the claims if the examples have structural elements that do not differ from the literal language of the claims, or if the examples include equivalent structural elements with insubstantial differences from the literal language of the claims.

What is claimed is:

1. An acoustic inlet barrel of an engine, the acoustic inlet barrel comprising:

an inner barrel configured to provide a boundary for directing airflow through the engine, the inner barrel comprising an inner face sheet separated from an outer face sheet by an acoustic core, wherein the inner face sheet comprises a plurality of elongated, non-circular perforations.

2. The acoustic inlet barrel of claim **1**, wherein each of the perforations is elongated with respect to a longitudinal axis.

3. The acoustic inlet barrel of claim **2**, wherein the longitudinal axis aligns with a flow contour line of the airflow through the engine.

4. The acoustic inlet barrel of claim **1**, wherein at least one of the perforations is shaped as an elongated slot.

5. The acoustic inlet barrel of claim **1**, wherein at least one of the perforations has a teardrop shape.

6. The acoustic inlet barrel of claim **1**, wherein at least one of the perforations has an elliptical shape.

7. The acoustic inlet barrel of claim 1, wherein at least one of the perforations has a dogbone shape.

8. A method of forming a component of an engine, the method comprising:

sandwiching an acoustic core between an inner section and an outer section of the component; and

forming a plurality of elongated, non-circular perforations in at least a portion of the inner section.

9. The method of claim 8, wherein the forming operation comprises using at least one robotic forming unit to elongate each of the perforations with respect to a longitudinal axis.

10. The method of claim 9, wherein the longitudinal axis aligns with a flow contour line of the airflow through the engine.

11. The method of claim 8, wherein the forming operation comprises forming at least one of the perforations as an elongated slot.

12. The method of claim 8, wherein the forming operation comprises forming at least one of the perforations as one or more of a teardrop shape, an elliptical shape, or a dogbone shape.

13. A forming system, comprising:

at least one robotic forming unit including at least one end effector positioned inside a barrel section configured as a composite sandwich structure having an inner face sheet, wherein the at least one robotic forming unit is operable to form a plurality of elongated, non-circular perforations into the inner face sheet using the at least one end effector to provide a predetermined percent-open-area of the inner face sheet.

14. The forming system of claim 13, wherein each of the perforations is elongated with respect to a longitudinal axis.

15. The forming system of claim 14, wherein the longitudinal axis aligns with a flow contour line of airflow through an engine.

16. The forming system of claim 13, wherein at least one of the perforations is shaped as an elongated slot.

17. The forming system of claim 13, wherein at least one of the perforations has a teardrop shape.

18. The forming system of claim 13, wherein at least one of the perforations has an elliptical shape.

19. The forming system of claim 13, wherein at least one of the perforations has a dogbone shape.

20. The forming system of claim 13, wherein the at least one robotic forming unit is configured to:

index a pattern of perforations to one or more cell walls of a honeycomb core of the composite sandwich structure;

form the pattern of perforations in the inner face sheet such that the perforations are located at a spaced distance from the cell walls of the honeycomb core; and

form the perforations such that the percent-open-area in one section of the inner face sheet is different than the percent-open-area in another section of the inner face sheet.

* * * * *