L. STEINBERGER.

CONNECTING DEVICE FOR CHAIN TYPE INSULATORS.

APPLICATION FILED DEC. 6, 1912.

1,228,711.

Patented June 5, 1917

2 SHEETS—SHEET 1.

Fig. 1.

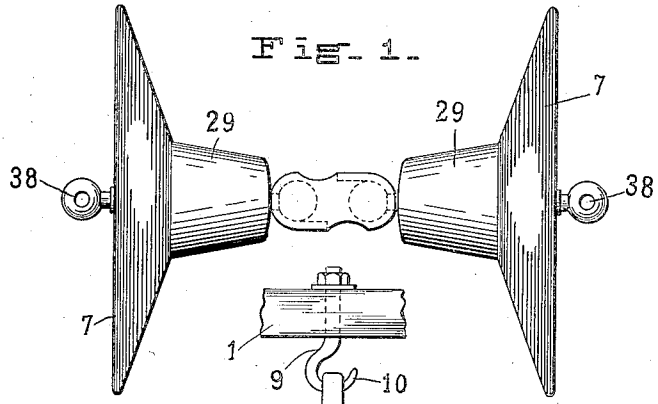

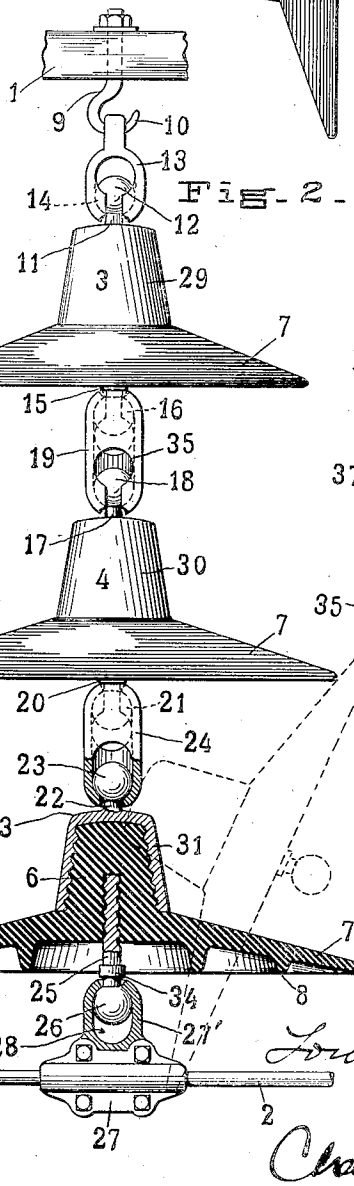

Fig. 2.

Fig. 3.

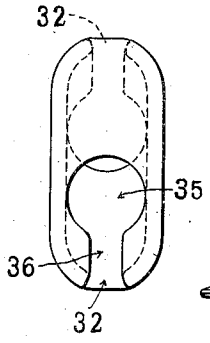

Fig. 8.

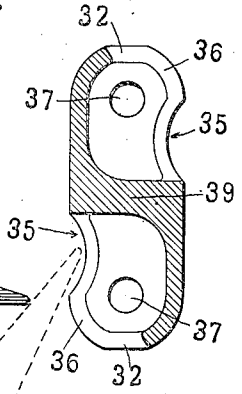

WITNESSES

J. Clyde Ripley.

L. Sanford Hands

INVENTOR

Louis Steinberger

BY

Charles H. Ripley

ATTORNEY

L. STEINBERGER.

CONNECTING DEVICE FOR CHAIN TYPE INSULATORS.

APPLICATION FILED DEC. 6, 1912.

1,228,711. Patented June 5, 1917.

2 SHEETS—SHEET 2.

Fig. 4.

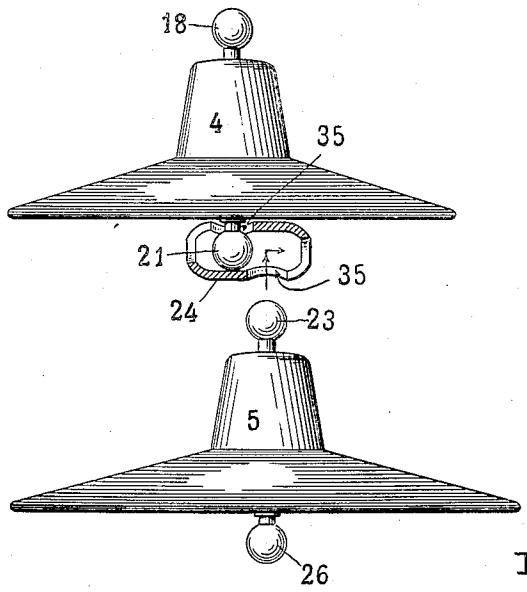

Fig. 6.

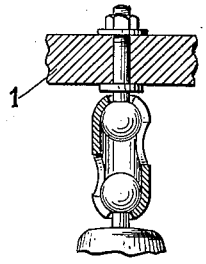

Fig. 7.

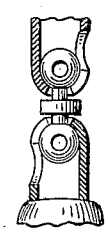

Fig. 5.

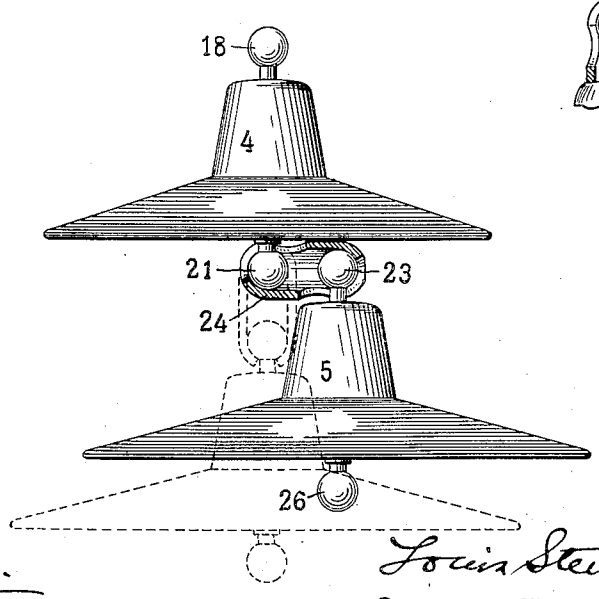

WITNESSES

J. Clyde Ripley.

L. Gifford Hardin

INVENTOR

Louis Steinberger

BY

Charles H. Wilson

ATTORNEY

UNITED STATES PATENT OFFICE.

LOUIS STEINBERGER, OF BROOKLYN, NEW YORK.

CONNECTING DEVICE FOR CHAIN-TYPE INSULATORS.

1,228,711. Specification of Letters Patent. Patented June 5, 1917.

Application filed December 6, 1912. Serial No. 735,293.

To all whom it may concern:

Be it known that I, LOUIS STEINBERGER, residing at 60–72 Washington street, Brooklyn, in the county of Kings and State of New York, have invented certain new and useful Improvements in Connecting Devices for Chain-Type Insulators, of which the following is a specification.

This invention relates to a connecting device for connecting adjacent units of a flexible chain-type insulator, which type of insulator is of particular value for supporting conductors carrying currents of high potential.

Among more important objects of this invention may be enumerated the following:

I. To provide a new and improved connecting device for connecting the adjacent units of a chain-type insulator whereby the adjacent units may be readily assembled and disassembled without the use of tools or of separately formed locking members, and whereby when connected, the units will be effectively retained against accidental disconnection.

II. To provide a connecting member comprising in itself an integral structure forming sockets adapted to coöperate with ball-shaped portions formed on adjacent insulator units, to provide entrances to the sockets so arranged that the ball-shaped portions of the insulator units may be easily inserted and seated therein, and when so seated automatically prevented from being unintentionally unseated, and said balls and sockets coöperating to permit a considerable amount of swinging movement of the insulator units relative to each other without danger of disconnection.

III. To construct the connecting member and the coöperative parts of the insulator units in such manner as not to present any sharp projecting portions such as might cause brush discharge or corona effects, or such as might induce the current to arc over the insulator unit, or cause a strong localized discharge about the insulator units.

IV. To provide a connecting member adapted to coöperate with a part of one of the insulator unit structures for forming a ball and socket joint, and to provide said connecting member also with means adapted to engage a differently shaped portion of the unit structure, or a differently shaped portion of a supporting means for the insulator, to form a simple hinge connection therewith.

V. To provide an insulator unit structure comprising a body portion having an annular flange projecting therefrom, and to provide a detachable connecting member for flexibly connecting the unit to a second unit of substantially the same description, the connecting member being detachable only when the units are swung into an abnormal position, and to so form the connecting member, and to so proportion the flanges relatively thereto, that the flanges of adjacent units will engage against each other to prevent accidental movement of the units into such abnormal position as will permit detachment of the connecting member from the units.

VI. To provide unit structures with parts adapted to engage, a part of one unit with a part of another unit, and to form the connecting member so that the engagement between parts of the unit structures will positively prevent any detachment of the units while in concatenated relation.

Other objects and aims of the invention, more or less specific than those referred to above, will be in part obvious and in part pointed out in the course of the following description of the elements, combinations, arrangements of parts and applications of principles, constituting the invention; and the scope of protection contemplated will be indicated in the appended claims.

In the accompanying drawings which are to be taken as a part of this specification, and in which I have shown a merely preferred form of embodiment of the invention:

Figure 1 is a side elevational view of two insulator units connected together by a connecting member constructed in accordance with the provisions of this invention,

Fig. 2 is a side elevational view, partly in section, of a chain-type suspension insulator, comprising units connected by connecting members constructed in accordance with the provisions of this invention,

Fig. 3 is detailed elevational view of one of the connecting members employed, and

Figs. 4 and 5 are detailed views graphically illustrating the manner of connecting or disconnecting the units, and

Figs. 6, 7 and 8 illustrate modifications.

It has been common heretofore to em-

ploy universal joint connection between adjacent units of a chain-type insulator in order to secure the advantages of flexibility and strength, but such structures have usually necessitated the use of tools in their assembling or the use of separately formed and detachable locking members for preventing disengagement of the parts of the joints.

In the present structure, however, these difficulties have been overcome and the connecting member hereof comprises a single integral structure adapted to coöperate with rigid portions of the adjacent insulator units to form therewith ball and socket joints. The balls are readily introduced into the sockets, and are positively retained against disengagement therefrom, by simple manipulation of the parts without any resort whatever to the use of tools or separately formed locking members.

The insulator units employed are preferably formed with annular flanges, or the like, of such proportions that, in extreme movement between the units of a chain structure, they will contact, the flange of one unit with the flange of the next adjacent unit and serve to prevent such relative movement between the units as will permit their disengagement from the connecting member.

The connecting member itself must be caused to move into a prescribed and extremely abnormal position before the units can be disconnected. The necessary position cannot possibly be assumed while the units are in concatenated relation, that is, while there is any force present tending to separate the units. Such position however, is readily brought about, by simple manipulation, when occasion requires.

Referring to the drawings for describing the details of the structure illustrated, the numeral 1 indicates a common support, and 2 the conductor supported from the support 1, and insulated therefrom by the intervening insulator structure as seen in Fig. 2 of the drawings. It is obvious however that the units may be arranged horizontally as illustrated in Fig. 1 if required.

As illustrated in Fig. 2 the insulator comprises three units generally designated as 3, 4 and 5, said units being of suitable construction, but each preferably comprising a body portion 6 formed with an annularly flaring flange or hood 7. The extent of the several flanges 7 may be varied in accordance with the requirements of the situation, and the flanges may be formed with suitable moisture shedding pending annular ridges 8, if desired. In the structure illustrated, the extent of the flange of the lowermost unit is greatest, and the extent of the flanges of the units thereabove are successively reduced.

The support 1 may comprise any suitable structure, as for instance, an ordinary cross-arm. A supporting bolt 9 is arranged in a suitable aperture formed in the support 1, and has its lower end depending beneath the lower surface of the support and preferably formed with a hooked-shaped portion 10. The uppermost insulator 3 is provided with an extension 11 projecting from its upper surface and formed with a ball-shaped head 12. The hook 10 and the ball 11 are engaged by a connecting link or member 13, the upper end of which is formed with an aperture through which the hook 10 engages to form a simple hinge connection therewith. The lower end is formed into a socket 14 adapted to engage over the ball 12 so as to coöperate therewith to form a ball and socket joint, permitting a free swinging movement in all directions of the insulator 3 from the support 1.

From the under surface of the insulator unit 3 projects an extension 15 having its lower end formed with a ball 16, seen in dotted lines.

The unit 4 is formed with a projection 17 extending from its upper surface, and the upper end of the projection is formed with a ball 18. The balls 16 and 18 are engaged by a connecting link or member 19, the opposite ends of which comprise sockets to take over the balls so as to coöperate therewith to form ball and socket connections whereby the unit 4 may have free swinging movement in all directions relatively to the unit 3.

Projecting from the under surface of the unit 4 is an extension 20 having its lower end formed with a ball 21. The unit 5 is formed with a projection 22 extending from its upper surface and formed with a ball 23. The balls 21 and 23 are engaged by a connecting member 24, the opposite ends of which are formed with sockets adapted to take over the balls so as to coöperate therewith to provide ball and socket connections whereby the unit 5 may have free swinging movement in all directions relatively to the unit 4.

Projecting from the under surface of the unit 5 is an extension 25, the lower end of which is formed with a ball 26. The conductor 2 is directly engaged and supported between the halves of a clamp member 27, having an upward extension 27′ comprising a socket 28 adapted to take over the ball 26 to form therewith a ball and socket joint whereby the clamp 27 with the conductor 2 may have free swinging movement in all directions relative to the unit 5.

The extensions 11, 17 and 22 from the upper surface of the units 3, 4 and 5, as illustrated, are each formed integral respectively with caps 29, 30 and 31 corrugated interiorly to engage the corrugated exterior surface of the body portion of the insulator units.

The extensions 15, 20 and 25, from the under surfaces of the units, are formed upon the lower ends of metallic rods which project upwardly into the bodies of the insulators, being corrugated and being arranged axially of the caps 29, 30 and 31 so as to be spaced therefrom by the insulating material of the unit bodies.

This structure is fully illustrated in the sectional view of unit 5 at the lower end of Fig. 2, the other units being shown as side elevational views of the same construction, and it is apparent that the prime requisite is that the projections from opposite sides of the insulator units be thoroughly insulated from each other by the material of the units. This insulation may obviously take any other shape or shapes, if desired. The arrangement of this particular feature may be the same for all units of a given structure or may vary, as desired, without altering the features pertaining to this invention. The construction illustrated, however, is simple and thoroughly appropriate to the features more intimately associated with this invention and provide no sharp projecting portions which might be productive of localized discharges or of arcing, etc.

It will be seen that the construction illustrated provides for a very considerable amount of flexibility between the supported conductor 2 and the support 1 for the reason that the connections between each of the units comprise two ball and socket joints, each of which affords considerable lateral swing. There is therefore little likelihood that any excessive swinging of the supporting conductor, such as might be occasioned by high wind, or by breaking of the conductor at one side of the insulator structure, would cause a fracture of any of the connecting means between the several units.

In order that the connecting members may be readily attachable and detachable from the insulator units, each of said members may comprise structures as shown either in Fig. 3 or in Fig. 7. The structure shown in Fig. 3, being the same as that illustrated in Fig. 2, the structure of Fig. 3 will first be referred to. The connecting member, in this instance, comprises a hollow cylinder having its ends constricted to form relatively small openings 32, as best seen in detailed view Fig. 3. The inner walls of the constricted portion of the cylinder comprise sockets into which the balls engage, the necks of the balls, that is the portions 11, 17 and 22 of Fig. 2, projecting through the apertures 32, said apertures being somewhat larger than the diameter of the necks so as to permit a desired amount of swinging movement in all directions. The necks are preferably made comparatively short and shoulders 33 and 34 are provided on the necks for preventing appreciable telescoping movement of the necks inwardly through the openings 32. The shoulders 33 comprise the upper wall of the caps upon the upper sides of the insulator unit structures, and the shoulders 32 comprise flanges formed upon the rods 25 depending from the under sides of the insulator unit structures.

In order to enable the introduction of the balls into the sockets, an opening 35 is formed in one side of the cylinder of a size to accommodate the easy passage of the ball, said opening being spaced somewhat from the end of the cylinder and having a slot 36 extending therefrom to the end of the opening 32. The slot 36 is only sufficiently large to accommodate the neck of the ball. A similar opening 35 and slot 36 is formed at the opposite end of the cylinder, being preferably arranged at a substantially diametrically opposite side thereof.

The exterior walls of the ends of the connecting member are hemi-spherical, being arranged concentric to a point which marks the center of a ball in the socket. The shoulders 32 and 33 on the necks engage this hemi-spherical surface to prevent displacement of the balls from the sockets. They thus prevent displacement of the balls, even while the necks are moving along the slots 36, until the connecting member and insulator unit are in substantially right angular relation, as will now be described.

In assembling the structure it is apparent that the connecting member must be held in substantially right angular relation to the longitudinal axis of the insulator unit, as graphically shown in Fig. 4, in order to introduce one of the balls, as 21, into one of the openings 35. The parts are then moved, without substantially changing their right angular relation, so that the ball will travel relatively to the end of the cylinder as in Fig. 5. The ball, as 23, of the other unit may be introduced with the other opening 35, while the connecting member is in its angular position, and may be moved into the seat at the other end. The two units may then be separated and swing the connecting member into axial alinement as shown in dotted lines Fig. 5.

Owing to the extensive flanges 7 formed upon the units, it is impossible to move one unit into right angular relation with another unit while the connecting member is in substantially axial alinement with the second unit, and hence it is apparent that the balls 2 of the units cannot possibly become accidentally disengaged from the connecting members. The shoulders 33, engaging the surface of the connecting member, as shown by dotted lines at the bottom of Fig. 2, will prevent movement of the balls toward the openings 35. The connecting member itself must be inclined in one direction relative to one unit and in a directly

opposite direction relatively to the other unit before the two units can be disconnected. Such movement of the connecting member could hardly be brought about by any accidental causes. The parts must necessarily be manipulated by an operator for the reason that disconnection cannot possibly take place except by lifting the lower unit bodily, and diagonally, toward the upper unit and then moving it laterally in a given direction.

The relative positioning of the two openings 35 is such that one laps the plane of the other. Supposing the two balls to be within the connecting member, it is impossible to move them both into position before their respective openings 35 at the same time. Possibility of accidental detachment is thus still further removed.

The connecting members may be formed with transversely extending apertures 37 at their opposite ends through which a portion of a hook supporting member, similar to that shown at 10 in Fig. 2, may project, if desired. This connection provides a simple hinge joint and the presence of the apertures 37 makes possible the use of the connecting members with insulator units or supports having projecting portions either of the ball-type or of the hook-type.

Here it may be noted that the connecting member 13 shown in Fig. 2, as having a part exclusively adapted to engage the hook 10 of the support 1, may, if desired, be of the same shape as the connecting members 19 and 24 between the units, the hook 10 in such instances taking through the apertures 37 therein. It may also be noted that the bolt 9 may be formed with a ball-shaped lower end in place of the hook 10 for engaging the upper socket of a connecting member similar to the members 19 and 24, as shown in Fig. 6.

Likewise it should be noted that the clamp member 26 for the conductor 2 may be formed with a ball-shaped extension in lieu of the socket 28, in which instance the ball-shaped portion of the clamp member and the ball 26, pendent from the under surface of the lowermost insulator unit, would be connected by a connecting member similar to the members 19 and 24.

It should also be noted, that, while the connecting links or members are shown and described as having socket-shaped portions for engaging balls carried by the unit structures, the arrangement might readily be reversed within the scope of this invention so that the connecting member could provide the balls and the insulator units provide the sockets, as shown in Fig. 7.

It should also be noted that the balls projecting from the insulator unit structures, or those of Fig. 7, may be provided with apertures 38 whereby the balls may be readily engaged with hook-shaped members, as 10 in Fig. 2, if desired, in the same manner as that described for the apertures 37 in the connecting members.

The modification shown in Fig. 8 comprises simply the insertion of a transverse strengthening rib or wall 39 intermediate the length of the connecting member for spacing the sockets apart and lending added strength to the structure.

It will, of course, be understood that various embodiments of the invention could be made without departing from the scope thereof, and that the following claims are intended to cover all of the generic and specific features of the invention which may be said to fall within the language of said claims.

Having thus described my invention, what I claim as new and desire to secure by Letters Patent, is:

1. In a chain type insulator, means for flexibly connecting adjacent insulating units thereof, comprising a member having sockets at its opposite ends, ball shaped portions formed upon adjacent insulating units projecting into said sockets, so as to comprise ball and socket connections with said insulating units, said connecting member being tubular and having a pair of openings formed in its opposite walls through which said balls may pass respectively, for detachment from said connecting member, and said openings being arranged in lapping relation, whereby movement of one ball to a position before its respective opening will dispose a portion of that ball before the other opening to retain the other ball against movement to position before said other opening, and prevent simultaneous detachment of both of said balls.

2. As an article of manufacture, a connecting member of the class described, having means at one end for forming one element of a ball and socket joint, and also having other means at one end for forming one element of a simple hinge joint.

3. As an article of manufacture, a connecting member of the class described, having a part at one end for forming one element of a ball and socket joint, and said part having an aperture extending therethrough, the walls of said aperture providing means for forming one element of a single hinge joint.

4. As an article of manufacture, an insulating unit, a part carried thereby, by which the insulator unit may be connected to a support, said part having means for forming one element of a ball and socket joint, and said part also having means for forming one element of a simple hinge joint.

5. In a chain type insulator, means for flexibly connecting together adjacent units thereof, said means comprising a connecting member having a pair of sockets therein,

ball-shaped members formed upon said adjacent units projecting into said sockets so as to comprise ball and socket connections between said units and said connecting members, one of said members having means whereby said members may be disconnected, and said two members having coöperative portions for preventing detachment of both said ball-shaped members simultaneously from their respective sockets.

6. In a chain type insulator, connecting means for flexibly connecting together adjacent insulating units thereof, said means comprising a pivotal connection between said units and including coöperative portions operative to permit disconnection of the adjacent units from each other when the units are moved into either of two abnormal positions relatively to each other, and at least one of the mentioned insulating units having a part adapted to engage the other mentioned insulating unit when said insulating units are moved toward one of said abnormal positions to retain said insulating units against accidental movement into said mentioned abnormal position.

In testimony whereof I affix my signature in the presence of two witnesses.

LOUIS STEINBERGER.

Witnesses:

L. Gusford Handre,

Nathalie Thompson.