Feb. 5, 1924. 1,482,752

L. E. LA BOMBARD ET AL

BLANK FEEDER

Filed Feb. 6, 1920

Fig. 3

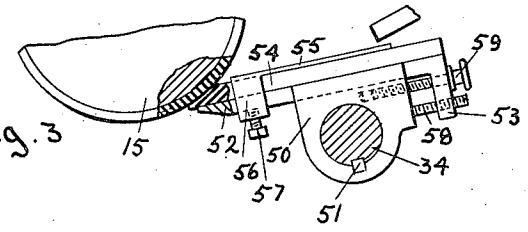

Fig. 4

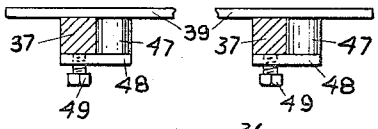

Fig. 1

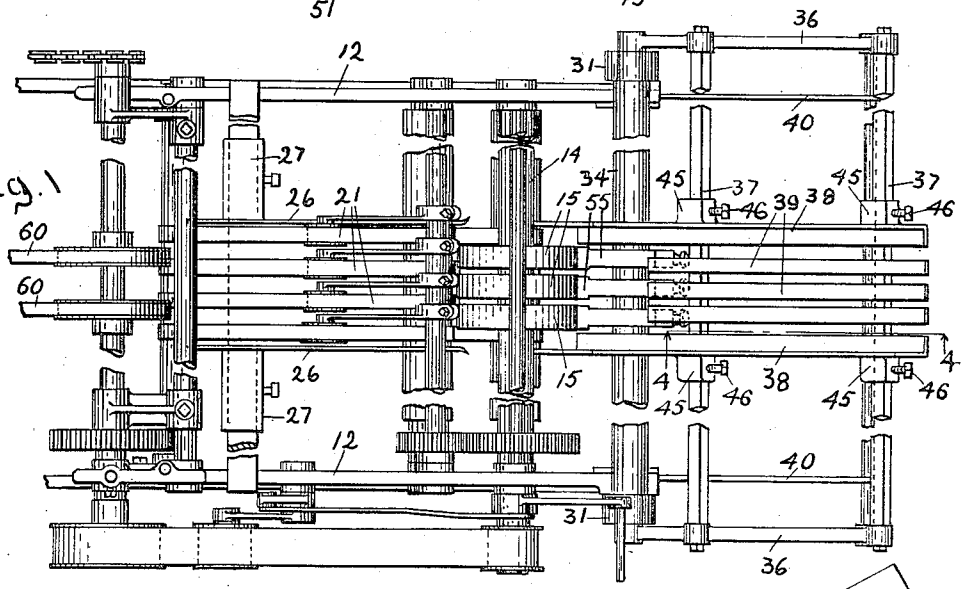

Fig 2

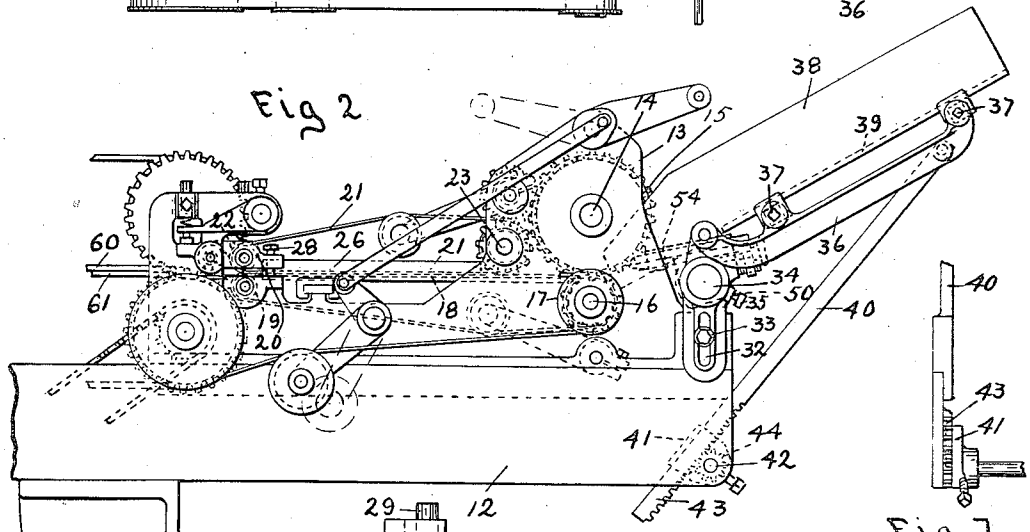

Fig. 7

Fig 5

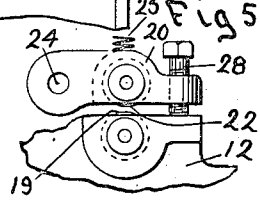

Fig. 6

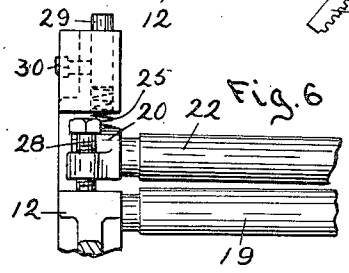

Inventors

Leon E. La Bombard

and

Melvin H. Sidebotham

by A. W. Harrison

Att'y

Patented Feb. 5, 1924.

1,482,752

UNITED STATES PATENT OFFICE.

LEON E. LA BOMBARD, OF CHELSEA, AND MELVIN H. SIDEBOTHAM, OF CLIFTONDALE, MASSACHUSETTS, ASSIGNORS TO SPECIALTY AUTOMATIC MACHINE COMPANY, OF CHELSEA, MASSACHUSETTS, A CORPORATION OF MASSACHUSETTS.

BLANK FEEDER.

Application filed February 6, 1920. Serial No. 356,702.

To all whom it may concern:

Be it known that we, LEON E. LA BOMBARD, a citizen of the United States, and resident of Chelsea, in the county of Suffolk, State of Massachusetts, and MELVIN H. SIDEBOTHAM, a citizen of the United States, and resident of Cliftondale, in the county of Essex and State of Massachusetts, have invented certain new and useful Improvements in Blank Feeders, of which the following is a specification.

This invention relates to feeders for sheet material and has particular reference to mechanism for feeding paper or pasteboard blanks to machines which fold them on parallel lines and adhesively connect overlapping edge portions to produce flat folded boxes or cartons. The demand for boxes of this type has resulted in the production of machines capable of making more than 50,000 an hour. As this high speed enables most orders for boxes to be filled in a few hours, and as the orders received by a manufacturer vary greatly as to the size and shape of the boxes and the quality of the material of which the blanks are made, it is highly desirable that the machine, and the feeding mechanism which forms an essential part thereof, shall be capable of operating successfully upon a very great variety of shapes, sizes, and qualities of blanks. If the machine as a whole is to be capable of doing work with a wide variety of shapes and qualities of blanks, the feeding mechanism must be capable of starting the blanks properly to the mechanism which is to do the folding. To adapt the machine for use in filling the different orders, several adjustments are necessary, and to enable the boxes to be made at low cost, the element of time is a material factor in the cost of production. These being the conditions, the object of the present invention is to provide a feeding mechanism which can be quickly adjusted for use with different shapes, sizes and thicknesses of blanks, and which will reliably start and feed all blanks from the supply hopper to the folding mechanism in straight condition. By straight condition is meant not twisted or partly turned sidewise or askew.

With the above and other objects in view, the invention consists in the improvements which will be hereinafter described and particularly pointed out in the claims.

Of the accompanying drawings which illustrate as much of the mechanism as will be necessary to enable the improvements to be understood:—

Figure 1 is a plan view of the feeder.

Figure 2 is a side elevation of the same.

Figure 3 is a sectional elevation of one of the blank retarding devices.

Figure 4 represents a section on line 4—4 of Figure 1 on a larger scale.

Figures 5 and 6 are detail views of a roll adjusting mechanism hereinafter described.

Figure 7 is a detail view of the means for adjusting the inclination of the blank hopper.

Side members of the frame of the machine are indicated at 12, said members being supported by suitable legs and having brackets or uprights 13 in which is mounted a driven shaft 14 carrying a plurality of feed disks 15 of the type usually known as combers.

Below shaft 14 is a driven shaft 16 carrying pulleys 17 for a plurality of blank-carrying belts 18 the other ends of which are mounted on a shaft 19. Above belts 18 and cooperating therewith to transfer blanks from the feed wheels to the machine which is to fold or otherwise treat the blanks, are belts 21 mounted on shafts 22, 23. The shaft 22 may be vertically adjusted at either end for a purpose explained hereinafter. To provide for such adjustment (see Figs. 5 and 6) each end of the shaft 22 is mounted in a bearing provided in a block 20 pivoted at one end 24 to the frame and pressed down by a spring 25 to a limit determined by a screw 28 the lower end of which bears on a shoulder of the frame 12. The pressure exerted by each spring 25 may be varied by a plunger 29 (Fig. 6) which is held in vertically adjusted position by a screw 30.

Side guides 26 extend along the cooperating stretches of belts 21, 18 to properly direct blanks being advanced by said belts. Said guides are laterally adjustable as by means of sleeve portions 27 mounted on a cross bar of the frame. In practice the belts 21, 18, are preferably laterally adjustable along their shafts, by means not necessary to illustrate.

Rising from each frame member 12 is a

bracket 31, said bracket having a vertical slot 32 through which a bolt 33 passes into the frame member, whereby said bracket may be secured in vertically adjusted position. Mounted in bearings formed in or carried by the two brackets is a transverse rod 34, means being provided such as binding screws 35, for rigidly holding said rod in rotatively adjusted position. The object of this structure will be presently explained.

Pivotally connected to the brackets 31 are two arms 36 which support and carry two transverse rods 37 on which are adjustably mounted two side guides 38 for a pile of blanks which are to be placed by the attendant on a plurality of strips 39 which are laterally adjustable on the rods 37. Supporting links or struts 40 are pivotally connected to the arms 36 and at their lower ends pass through guides 41 pivotally mounted on a shaft 42. The struts are formed or provided with rack teeth 43 (Figs. 2 and 7) engaging pinions 44 carried by the shaft 42, and said shaft is adapted, by any suitable means, to be rotatively adjusted and secured so as to act, through the struts 40, to vary the angle of inclination of the hopper consisting of the strips 39 and the side guides 38.

The hopper parts, comprising the side guides 38, and the floor strips 39 are all laterally adjustable on only the two transverse rods 37. Therefore the changing of positions of the guides and strips to accommodate different widths of blanks is simplified and so facilitated as to effect a material saving of time as compared with structures employing a greater number of transverse supports.

The side guides 38 have hubs 45 which are slidable on the rods 37 and secured by set screws 46. The strips 39 (Fig. 4) have lugs 47 depending therefrom provided with ears 48 extending under the rods 37. Set screws 49 hold the ears and consequently the strips 39 in laterally adjusted position. It is to be noted that both lugs 47 of each strip pass down close to the rear faces of the two rods 37. Therefore when any strip is to be entirely removed to make room for setting the others and the side guides closer together, as when much narrower blanks are to be placed in the hopper, it is only necessary to loosen its two screws 49 and slip that bar first rearwardly and then upwardly.

In practice, as is usual with this general type of blank feeder, the wheels or disks 15 have partial or entire friction peripheries, and during their rotation successively remove blanks from a pile supported by the inclined hopper. It is also customary to employ what are termed "retards" for the edges of the blanks close to the feed wheels. For many classes of work rubber is the most satisfactory material for the retarding element. To compensate for wear of the rubber it has been customary to pivotally support the holders for the rubber blocks or strips, and provide means for adjusting said holders on their pivotal supports. This however results in changing the angle of the acting face of the rubber relatively to the periphery of the combing feed wheel and materially interferes with the accurate feed of the blanks. To overcome this objection we provide retard mechanism which enables adjustment to be not only quickly effected but also to enable adjustment to compensate for wear of the exposed ends of the rubber retards to be made without changing the angle of the acting face of the rubber relatively to the combing wheels. This is done by so mounting the retards that they can be adjusted longitudinally in a straight line tangential to the peripheries of the feed wheels. One way in which we accomplish this is illustrated in Figures 2 and 3 in which one of a plurality of blocks 50 is shown as mounted on the rod 34. In practice, a plurality of retards are so mounted, and in order that all may be laterally adjusted on said rod without change in rotative position, such means as keys 51 are employed, fitting keyways in the rod and blocks.

Slidably mounted in a groove or way in the flat top of each block 50 is a plate 52 (Fig. 3) having a downturned flange or lug 53 at its rear end. A strip of rubber or equivalent friction material 54, having its entire front end exposed and bevelled substantially to accord with the periphery of a feed wheel 15 with which it is in alinement, is supported by and adjustably secured on the plate 52, as by means of a clamp plate 55 formed with a loop 56 embracing both the rubber and the plate 52 and having a binding screw 57 bearing against the under side of said plate.

A screw 58 passes freely through the lug 53 into the rear of block 50, its head, or a washer, bearing against the outer surface of the lug. Another screw 59 engages a threaded hole in the lug 53 and bears against the rear face of the block 50. By manipulating the two screws 58, 59, in a readily understood manner, the plate 52, and with it the retard 54, can be very accurately adjusted relatively to the feed wheel to compensate for wear of the retard without varying the angle of its exposed bevelled acting face relatively to said wheel. After such wear and repeated adjustments as bring the tip of the supporting plate 52 too close to the feed wheel, the screw 57 is loosened and the plate 52 withdrawn and the retard is slid forward on the plate. Then the screw 57 is tightened to again clamp the retard and the proper adjustment is effected by the screws 58, 59.

To enable the machine to operate successfully on the widest possible range of work, several retards (such as four) are employed. As all are adjustable in the same straight in and out manner described, the angle of the acting faces of all will be uniform even when only one or two become so worn as to need adjustment. In practice some of the retards frequently wear more rapidly than others because the blanks are often of such irregular shapes that the portions of blanks drawn over one retard by the feed operation are much longer than portions drawn over the next adjoining retard and therefore cause more wear. Therefore it may be that only one retard needs adjustment to restore it to correct cooperation with the other retards of the set or series.

As will be clear, lateral adjustments of the retards along the rod 34, as when different shapes or widths of blanks are to be operated upon, does not affect the angular relationship of the bevelled tips of the retards relatively to each other or to the peripheries of the feed wheels. This is due to the key and keyway mounting described.

Sometimes the blanks used for one order of boxes are so different from those for another order, as to thickness or flexibility, that the angle of the retards suitable for one kind will not so well serve for the other kind. The mechanism described and illustrated provides for meeting changed conditions of this nature by raising or lowering the brackets 31 in which the rod 34 is mounted, and by rotatively adjusting said rod to cause the tips of the retards to occupy the proper positions relatively to the feed wheels. The binding screws 35 enable this rotative adjustment to be secured. And by it all of the retards will be adjusted exactly alike, not only enabling absolute uniformity of adjustment to be secured but also greatly saving time over mechanism which requires independent adjustment of a plurality of such devices.

The structure as a whole ensures retention of all the retards rigidly, there being no possibility of one being out of the plane of the others such as exists with pivoted and separately adjustable retards.

As blanks employed for making flat folded boxes have parallel side edges and are scored or creased for folding on lines parallel with the side edges, it is absolutely essential, to make proper boxes, that the blanks shall be fed straight; that is, that they shall not reach the folding mechanism with their edges or creases out of parallelism with the line of feed. The mechanism with the retards such as described provides for accurately feeding blanks of wide ranges as to shapes, widths, and qualities of material. If, however, the attendant fails to place the pile of blanks in fairly uniform proper positions in the hopper and so causes some or all of the blanks to be started askew, or if for any other reason any blanks get past the feed wheels in askew positions, they will be straightened out by the structure including the upper and lower carrier belts 21, 18, and the side guides 26. This is because said belts, travelling at the same speed but not gripping the blanks too tightly, will permit any askew blank to be straightened out by the sliding contact of the edges thereof with the side guides. Any non-travelling or non-driven pressers above the blanks, in order to hold the blanks so they will be forwarded by the lower belts, must bear with such force on the blanks as to prevent them from being shifted by action of side guides. Our improved pressers comprising the upper driven belts 21 which lightly bear on the blanks permit any askew blanks to be straightened out by the side guides 26.

There are some types of boxes which have long end flaps or tongues that are tucked down inside the boxes after bottles or other goods are placed therein. The blanks for such boxes have very irregular front and rear edges and are sometimes of such size that front portions thereof reach the usual carrier belts 60, 61 of the folding machine (not shown) before the rear extensions which are to form the tuck flaps are entirely free from the feeder. In such cases if the folding machine belts are travelling faster than the feeder the said rear extensions may be torn off. To avoid this, one end or the other of the shaft 20 for the upper belts 21 is raised by means of the vertical adjustment hereinbefore described, so there will be no such grip on the said extensions as would prevent them from slipping. If the blanks are of such form that the tuck flaps pass nearer the right side or the left side of the machine, then the right or left end of the shaft 22 is raised for the purpose explained.

This adjustment of one end or the other of shaft 22 serves the further purpose of ensuring delivery to the folding machine belts in straight or lined up positions. When the boxes are made of blanks having the long flap extensions referred to, then said roll may be adjusted so that the front extension will be gripped lightly enough to cause the box, if travelling in a laterally inclined position, to be swung straight by the side guides 26.

As illustrated by comparing Figures 1 and 3, each retard strip 54 is covered for the greater part of its length by a plate 55. In practice the plates 55 are of smooth-surfaced metal to offer the least possible frictional resistance to the front edges of the blanks which advance over them from

the hopper. Since the forward position of each plate 55 relatively to the retard strip 54 below it can be adjusted the effective length of each retard can be varied to best suit the particular blanks to be fed. For instance, if the blanks are thick ones the relative positions of the plates 55 and strips 54 will be so adjusted as to expose more of the retard strips than when the blanks are thin.

Having now described our invention, we claim:

1. In mechanism of the character described, a blank hopper, a combing wheel for forwarding blanks from the hopper, a retard and a support therefor in proximity to said wheel, means for adjusting the angle of said support relatively to the wheel, and means for adjusting the retard longitudinally in a straight line upon its support.

2. A blank feeder comprising a hopper, a plurality of combing wheels, a retard for each of said wheels, and means for independently adjusting each of the retards in a straight line tangential to its cooperating wheel.

3. A blank feeder comprising a hopper, a plurality of combing wheels, a retard for each of said wheels, means for independently adjusting each of the retards in a straight line tangential to its cooperating wheel, and means whereby the angles of the retards relatively to the wheels may be simultaneously and equally adjusted.

4. A blank feeder comprising a hopper, a plurality of combing wheels, a similar plurality of retards having bevelled faces in proximity to the wheels, and means for independently adjusting each of the retards to compensate for wear without changing the angle of its bevelled face relatively to the adjacent wheel.

5. A blank feeder comprising a hopper, a plurality of combing wheels, a similar plurality of retards having bevelled faces in proximity to the wheels, means for laterally adjusting the wheels and retards, and means for independently adjusting each of the retards to compensate for wear without changing the angle of its bevelled face relatively to the adjacent wheel.

6. A blank feeder comprising a hopper, a plurality of combing wheels, a rod parallel with the axis of said wheels, means for adjusting said rod vertically and rotatively, a plurality of supports mounted non-relatively on the rod, and longitudinally adjustable retards carried by said supports.

7. Blank feeding mechanism having, in combination, means for removing blanks singly from a source of supply, upper and lower belts for forwarding the single blanks successively, said upper and lower belts being relatively arranged to only lightly engage the blanks, means for driving both the upper and lower belts at the same speed, and side guides for the edges of the blanks being forwarded.

8. A blank feeder comprising in its construction a hopper consisting of a pair of transverse rods and side guides and continuous blank-supporting strips mounted on said rods and laterally adjustable relatively to each other, means being provided for removing blanks singly from said hopper.

9. A blank feeder having, in combination a hopper and means for removing blanks singly therefrom, said hopper comprising a pair of transverse rods one higher than the other, side guides adjustably mounted thereon, and continuous blank-supporting strips adjustably and removably connected with said rods between the side guides.

10. A blank feeder having, in combination a hopper and means for removing blanks singly therefrom, said hopper comprising a pair of transverse rods one higher than the other, side guides adjustably mounted thereon, and a plurality of blank-supporting strips mounted on said rods, each of said strips having rod-engaging clamps depending therefrom past the rear faces of the rods.

11. A blank feeder having upper and lower forwarding belts and side guides, a shaft for supporting the upper belts at the delivery ends thereof, and means for independently adjusting either end of said shaft.

12. A blank feeder having upper and lower forwarding belts and side guides, upper and lower belts for receiving blanks from said forwarding belts, a shaft for supporting the upper forwarding belts at the delivery ends thereof, and means for varying the height of either end of said shaft.

13. In mechanism of the character described, a blank hopper, a combing wheel, and a retard having an adjustable covering plate intermediate of the hopper and wheel.

14. A blank feeder comprising a hopper, a plurality of combing wheels, a friction retard in alinement with each wheel, and means for independently varying the lengths of the exposed surfaces of the retards.

15. A blank feeder comprising a hopper, a combing wheel, a friction retard intermediate the hopper and wheel, and means for varying the effective length of the retard, said means comprising a longitudinally adjustable metal strip superimposed upon the retard.

In testimony whereof we have affixed our signatures.

LEON E. LA BOMBARD.
MELVIN H. SIDEBOTHAM.