OPIC
OFFICE DE LA PROPRIÉTÉ INTELLECTUELLE DU CANADA

CIPO
CANADIAN INTELLECTUAL PROPERTY OFFICE

(12) (19) (CA) **Demande-Application**

(21) (A1) **2,215,508**
(86) 1996/03/28
(87) 1996/10/10

(72) VESELY, Ivan, US
(72) SMITH, Wayne L., CA
(72) GUBBELS, Andrew W., CA
(71) Sonometrics Corporation, CA

(51) Int.Cl.[6] A61B 8/13, G01B 17/00, G01S 5/18, G01S 5/22, G01S 5/30
(30) 1995/03/28 (08/411,959) US

(54) **SYSTEME DE POURSUITE TRIDIMENSIONNEL NUMERIQUE A ULTRASONS**

(54) **THREE-DIMENSIONAL DIGITAL ULTRASOUND TRACKING SYSTEM**

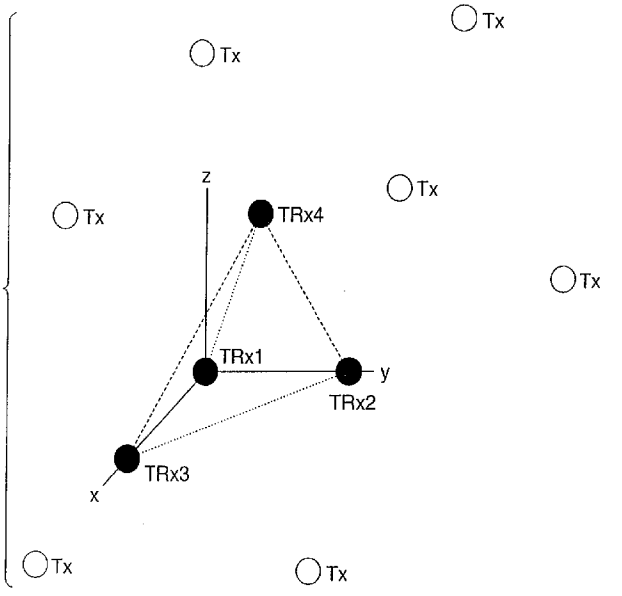

(57) Procédé et appareil permettant de mesurer simultanément des distances multiples au moyen de transducteurs piézo-électriques en réseau. L'utilisation de compteurs numériques haute fréquence permet de définir rapidement et avec précision le temps de propagation entre l'activation d'un transducteur ultrasonique et la réception par des transducteurs similaires. En faisant alterner le cycle opératoire entre le mode transmission et le mode réception, le système est en mesure de poursuivre et trianguler les positions tridimensionnelles pour chaque transducteur.

(57) A method and apparatus for simultaneous measurement of multiple distances by means of networked piezoelectric transducers. Through the use of high frequency digital counters, the propagation delay between the activation of an ultrasonic transducer and the reception by similar transducers is quickly and accurately defined. By alternating the duty cycle between transmit and receive modes, the system can track and triangulate the three-dimensional positions for each transducer.

CA 02215508 1997-09-16

PCT

WORLD INTELLECTUAL PROPERTY ORGANIZATION
International Bureau

INTERNATIONAL APPLICATION PUBLISHED UNDER THE PATENT COOPERATION TREATY (PCT)

(51) International Patent Classification 6 :
G01S 5/22, 5/30, 5/18,
A61B 8/08, 17/34

A3

(11) International Publication Number: WO 96/31753

(43) International Publication Date: 10 October 1996 (10.10.96)

(21) International Application Number: PCT/CA96/00194

(22) International Filing Date: 28 March 1996 (28.03.96)

(30) Priority Data:
08/411,959 28 March 1995 (28.03.95) US

(60) Parent Application or Grant
(63) Related by Continuation
US 08/411,959 (CIP)
Filed on 28 March 1995 (28.03.95)

(71) Applicant *(for all designated States except US)*: SONOMETRICS CORPORATION [CA/CA]; Unit 116, 4500 Blakie Road, London, Ontario N6L 1G5 (CA).

(72) Inventors; and
(75) Inventors/Applicants *(for US only)*: VESELY, Ivan [CA/US]; 1216 Oakridge Drive, Cleveland Heights, OH 44121 (US). SMITH, Wayne, L. [CA/CA]; Unit 27043, 60 North Centre Road, London, Ontario N5X 3W0 (CA). GUBBELS, Andrew, W. [CA/CA]; R.R. 1, Mt. Brydges, Ontario N0L 1W0 (CA).

(74) Agent: PERRY, Stephen, J.; Sim & McBurney, Suite 701, 330 University Avenue, Toronto, Ontario M5G 1R7 (CA).

(81) Designated States: AL, AM, AT, AU, AZ, BB, BG, BR, BY, CA, CH, CN, CZ, DE, DK, EE, ES, FI, GB, GE, HU, IS, JP, KE, KG, KP, KR, KZ, LK, LR, LS, LT, LU, LV, MD, MG, MK, MN, MW, MX, NO, NZ, PL, PT, RO, RU, SD, SE, SG, SI, SK, TJ, TM, TR, TT, UA, UG, US, UZ, VN, ARIPO patent (KE, LS, MW, SD, SZ, UG), Eurasian patent (AM, AZ, BY, KG, KZ, MD, RU, TJ, TM), European patent (AT, BE, CH, DE, DK, ES, FI, FR, GB, GR, IE, IT, LU, MC, NL, PT, SE), OAPI patent (BF, BJ, CF, CG, CI, CM, GA, GN, ML, MR, NE, SN, TD, TG).

Published
With international search report.
Before the expiration of the time limit for amending the claims and to be republished in the event of the receipt of amendments.

(88) Date of publication of the international search report:
6 February 1997 (06.02.97)

(54) Title: THREE-DIMENSIONAL DIGITAL ULTRASOUND TRACKING SYSTEM

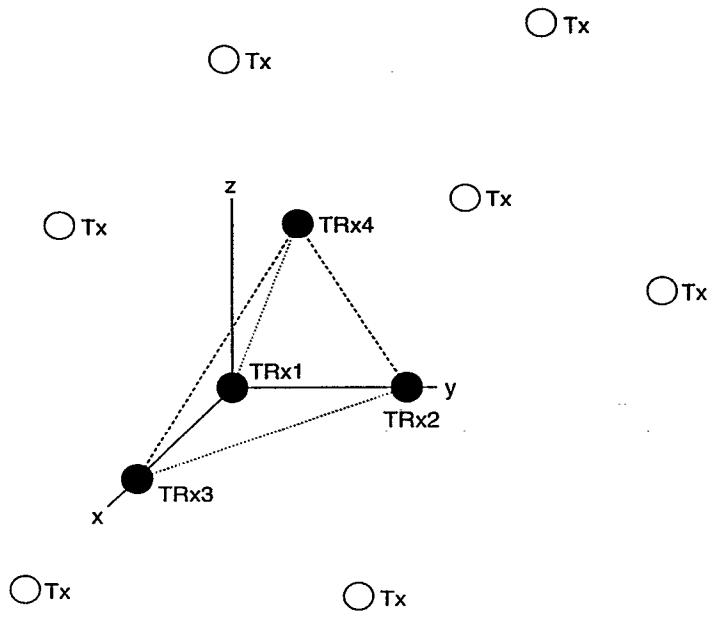

(57) Abstract

A method and apparatus for simultaneous measurement of multiple distances by means of networked piezoelectric transducers. Through the use of high frequency digital counters, the propagation delay between the activation of an ultrasonic transducer and the reception by similar transducers is quickly and accurately defined. By alternating the duty cycle between transmit and receive modes, the system can track and triangulate the three-dimensional positions for each transducer.

THREE-DIMENSIONAL DIGITAL ULTRASOUND TRACKING SYSTEM

Field of the Invention

This invention relates in general to distance measuring devices, and more particularly to a software controlled digital sonomicrometer for measuring distances in two or three dimensions using multiple piezoelectric transducers.

Background of the Invention

Using the time-of-flight principle of high frequency sound waves, it is possible to accurately measure distances within an aqueous medium. High frequency sound, or ultrasound, is defined as vibrational energy that ranges in frequency from 100 kHz to 10 MHz. The device used to obtain three dimensional measurements is known as a sonomicrometer. Typically, a sonomicrometer consists of a pair of piezoelectric transducers, (a transmitter and a receiver), that are implanted into tissue, and connected to electronic circuitry. To measure the distance between the transducers, the transmitter is electrically energized to produce ultrasound. The resulting sound wave then propagates through the medium until it is detected by the receiver.

The transmitter is energized by a high voltage spike, or impulse function lasting under a microsecond. This causes the piezoelectric crystal to oscillate at its own characteristic resonant frequency. The envelope of the transmitter signal decays rapidly with time, usually producing a train of six or more cycles that propagate away from the transmitter through the aqueous medium. The sound energy also attenuates with every interface that it encounters.

The receiver is usually a piezoelectric crystal with similar characteristics to the transmitter crystal, that detects the sound energy and begins to vibrate. This vibration produces an electronic signal in the order of millivolts, that can be amplified by appropriate receiver circuitry.

The propagation velocity of ultrasound in aqueous media is well documented. The distance travelled by a pulse of ultrasound can therefore be measured simply by recording the time delay between the instant the sound is transmitted and when it is received.

Prior art sonomicrometers suffer from a number of shortcomings which limit their utility.

Firstly, conventional sonomicrometers use analog circuitry to transmit and receive signals (e.g. phase capacitative charging circuits). The voltage representing the measured distance is then output to a strip chart recorder in analog form. This data must then be digitized for computer analysis.

Secondly, conventional systems use analog potentiometers to adjust the inhibit time and the threshold voltage that triggers the receiver circuits. This often requires the use of an oscilloscope. Each time the system is used, these settings must be manually set and adjusted in order to tune the system. This can be time consuming and annoying. As a whole, the function of the system can not be changed. The repetition frequency is fixed, regardless of the number of channels used, and the system is therefore very limited in terms both of the distances that can be measured, and the temporal precision with which the system operates.

Thirdly, conventional ultrasound tracking systems feature pairs of transmitter and receiver crystals that are energized sequentially at fixed repetition rates. As such, prior art systems lack experimental flexibility. For example, before a pair of crystals is implanted, the user must decide each crystal's function; similarly, the user must determine which distances are to be measured by which crystal pair. This can be awkward because surgery often necessitates changes during the procedure. If either of the receiver or transmitter crystals malfunctions, the distance between them cannot be measured. Critical measurements can therefore be lost

after a significant amount of effort is put into setting up the surgery.

Fourthly, conventional sonomicrometer systems measure only a straight line distance between any isolated pair of crystals. Three dimensional information is therefore impossible to acquire.

Even if multiple combinations of distances could somehow be linked together, the inherently analog nature of the data would necessitate the use of additional, very complex hardware.

Finally, conventional systems use discrete elements, such as threshold capacitors and potentiometers requiring large plug-in units to increase the number of channels. The systems are very large, usually two feet wide by 18" deep, and up to 12" high. Additional hardware such as strip chart recorders must be used for visualization and subsequent processing. This can be very awkward given the space constraints at busy research institutes and hospitals.

Summary of the Invention

According to the present invention, a software controlled digital sonomicrometer is provided which overcomes the problems of prior art conventional sonomicrometers and provides enhanced functionality for diverse clinical and medical research applications.

Firstly, the ultrasound tracking system of the present invention uses modern day digital electronics in conjunction with an integrated personal computer. External A/D converters are not required, as the data is acquired digitally, directly from the sensors. Due to the speed of the controlling computer, the tracking system of this invention is capable of detecting distance increments as small as 19 μm. The acquired data can be displayed on the computer screen as it is being obtained, and can be saved to the computer's storage media with a simple key stroke. After an experiment or surgical

procedure, the saved data can be examined and manipulated according to the user's specifications.

Secondly, according to the system of the present invention, virtually every function is digitally controlled, and therefore very flexible. To begin, a set-up menu is generated which allows the user to select which crystals are active as well as the function of each channel. Next, a data display program permits the parameters of the transducer to be customized for specific applications. For example, if very few channels are being used, the repetition frequency can be increased so that data can be acquired at several KHz. On the other hand, if the system is being used *in vitro*, where persistent echoes from a container vessel may present a problem, the repetition frequency can be reduced to allow the echoes to attenuate between successive measurements.

The duration of the power delivered to the crystals can be reduced for precision work or increased if greater distances are required to be measured. The duration of the delay required to overcome electromagnetic interference between crystal leads is adjustable by means of a variable inhibit feature. Additionally, the number of samples displayed and stored in any given data save is variable according to the length of time that a user's protocol demands. Finally, the resolution of the displayed information is variable in conjunction with the degree of motion of the measured specimen. All of these functions are controlled digitally by means of custom designed digital cards or modules discussed in greater detail below, which, in turn, are software controlled.

Additional customized software is included in the system of the present invention for post processing and visualizing the acquired data. In these routines, stray data points can be easily removed, three point filters can be applied for smoothing, level shifts can remove areas of discontinuity, channels can be derived, beat analyses can be performed, and automatic minimum/maximum

level sensing can be applied. Finally, routines can be provided that allow animated data points in a Cartesian coordinate system while providing volumetric and position information.

The ultrasound tracking system of the present invention overcomes the limitation of prior art crystal pairs. The present system can work with as many as 32 individual transducers that can be energized sequentially at very high repetition rates, thereby giving the impression that several distances are being measured instantaneously. In reality, the distances are measured in sequence, but since the delay time between successive measurements is never greater than five milliseconds, the measurements occur virtually simultaneously for most biological applications.

Additionally, the system of the present invention provides the option of combining the transmitter and receiver circuitry into one transceiver. This provides a researcher with the freedom to affix an array of crystals to a test object (e.g. catheter, needle, probe, etc,) and then decide which crystals are to function as transmitters and which are to function as receivers. Moreover, this type of configuration does not need to be limited strictly to transmitter-receiver pairs. By using dedicated transceivers, the duty cycle between implanted crystals can automatically alternate between transmit and receive modes, so that every possible combination of distances between a group of crystals can be determined. This type of application is particularly useful for studies which require redundancy of measurement, as well as for establishing *in vivo* reference frames from which to base three dimensional tracking.

The ultrasonic tracking system of the present invention is configurable into a true 3-D mode. In this configuration four or more transceivers are implanted within an object (i.e. specimen) in which distances are to be measured, thereby serving as a mobile reference

frame. Multiple transmitters are then attached to the specimen at various locations. Since any three transceivers can send and receive signals, they essentially create an *x,y* plane. The fourth transceiver is then used to determine the z coordinate of the surrounding crystals by determining if the active transmitter lies above or below the reference plane.

Finally, because the system of the present invention uses modern day integrated circuitry and custom programmed logic chips, it is physically much smaller than prior art units. A large part of the system of the present invention is implemented within the user P.C. (personal computer). The entire unit is composed of three digital computer cards that plug directly into a standard AT computer mother board. A single cable connection connects the controlling computer and the discrete peripheral transmitter/receiver/transceiver unit. This convenient set-up drastically reduces the amount of experimental space required over prior art conventional units

Brief Description of the Drawings

A detailed description of the preferred embodiment is provided herein below with reference to the following drawings, in which:

Figure 1 is a schematic representation of four transducers in three dimensional space, for tracking and triangulating the three dimensional positions of each transducer, in accordance with the present invention;

Figure 2, comprising Figures 2A, 2B, 2C and 2D, is a schematic diagram of a computer interface architecture used on all digital cards or modules of the preferred embodiment;

Figure 3, comprising Figures 3A, 3B, 3C, 3D, 3E, 3F, 3G, 3H, 3I, 3J, 3K, 3L, 3M, 3N, 3O, 3P and 3Q is a schematic diagram of a controller card architecture according to the preferred embodiment;

Figure 4, comprising Figures 4A, 4B, 4C, 4D, 4E, 4F, 4G, 4H, 4I, 4J, 4K, 4L, 4M, 4N, 4O and 4P, is a schematic diagram of a counter card architecture according to the preferred embodiment;

Figure 5, comprising Figures 5A, 5B, 5C, 5D, 5E, 5F, 5G, 5H, 5I, 5J, 5K, 5L, 5M and 5N is schematic diagram of an A/D card architecture according to the preferred embodiment;

Figure 6, comprising Figures 6A, 6B, 6C and 6D, is a schematic diagram of a transmitter/receiver/transceiver architecture according to the preferred embodiment;

Figure 7, comprising Figures 7A and 7B, is a timing diagram showing operation of the counter module according to the preferred embodiment;

Figure 8, comprising Figures 8A and 8B, is a timing diagram showing operation of the A/D module according to the preferred embodiment;

Figure 9 is a schematic illustration of a catheter guidance system according to a specific implementation of the present invention;

Figure 10 is a schematic diagram of a multiple-transducer catheter according to the preferred embodiment;

Figure 11 is a flow chart of a 3-D visualization algorithm which uses the tracking system of the present invention;

Figure 12 is a perspective view of a cylindrical or ring-shaped transducer according to a first alternative;

Figure 13 is a perspective view of a ring-shaped array of crystals, according to a second alternative embodiment;

Figure 14 is a perspective view of a composite transducer, according to a third alternative embodiment; and

Figure 15 is a schematic illustration of the external reference frame of the catheter guidance system according to the implementation of Figure 9.

Detailed Description of the Preferred Embodiment

As discussed above, the ultrasonic tracking system of the present invention utilizes a plurality of transceivers, each of which can be programmed to operate as a transmitter or a receiver. By utilizing four or more transceivers, full three dimensional measurement capability is provided, as shown in Figure 1. Any three transceivers (TRx1, TRx2 and TRx3) lay in a plane (i.e. the *x,y* plane). The fourth transceiver (TRx4) may then be used to determine the *z* coordinates of the surrounding crystals (i.e. multiple crystals Tx) by determining if an active one of the transmitter crystals lies above or below the reference plane established by transceivers TRx1, TRx2 and TRx3. Each of the many transmitters (Tx) attached to the specimens are sequentially fired, while all reference transceivers record the received signals. Since the distance from each transmitter to the reference plane created by the transceivers is known, the relative *x,y,z,* coordinates of the transmitters can be determined. This is done in real time on a personal computer (P.C.) with the use of triangulation. This method of networking the crystals is unique to the system of the present invention, and permits the user to trace the three-dimensional motion of an object under investigation. Obviously, the greater the number of transmitters, the better is the reconstruction.

Specific applications of the digital ultrasound tracking system which utilize three dimensional tracking and triangulation, are discussed in greater detail below.

As indicated above, the ultrasonic tracking system according to the present invention is preferably fully integrated into the standard AT-style computer motherboard found in modern PCs.

The three digital cards which comprise the majority of the hardware for the present invention, perform specific, modular functions in the overall operation of

the unit. As such, each card is provided with a proper system interface structure in order to be compatible with the ISA architecture of the controlling processor.

Figure 2 is a block diagram of the computer interface and addressing scheme common to all three digital cards. It should be noted that the system is classified as an I/O mapping device as opposed to memory mapping device. Consequently, dedicated I/O registers within the controlling processor are responsible for all data throughput.

As illustrated in Figure 2, the system computer interface architecture features a full two byte data transfer (DO-D15), as well as partial address decoding (A1-A13). Full two byte address decoding is not required. All signals sent to, or taken from the AT bus are buffered using octal buffers (d1 & d2) for both address and control lines, and transceivers (d3 & d4) for the data lines. In terms of decoding, each board features an eight position dip switch (d7) or equivalent for address selection. Address lines A6-A13 are used for this function, thus providing 256 distinct addressing locations, each with a resolution of 40 (hex) (i.e. 2^6). It should be noted that AO is not used for address decoding.

An 8-bit magnitude comparator (d5) is used to equate the manually set dip switch with address lines polled by the computer mother board. When a match is found, a signal is generated which gates demultiplexers d8 and d9, each of which is a 1-of-8 demultiplexer. The lower three address lines (A1-A3) are used as inputs to both of these Read and Write demultiplexers. To distinguish their functionality, the buffered IOR signal is sent to opposite polarity enables on each demultiplexer. Thus if IOR is in a high state, the system computer interface is in a Write mode. To avoid Reading and Writing from the I/O address ports, A4 is also used as an opposite polarity input to d8 and d9. This has the effect of

offsetting the Reads from the Writes by precisely 10 (hex) (i.e. 2^4). The result of this is two controllable ranges of eight data bits used for gating "reads" from the digital boards, and "writes" to the digital boards. A single PLD (d6) serves to handle the glue logic between the other components of the decoder circuitry.

Due to the architecture of the x86 family of microprocessors, there are only a finite amount of I/O registers. These registers can be partitioned into either 65535 8-bit registers, or 32767 16-bit registers. Due to the nature of the data transfers to and from the boards, and by selection of an active low signal to the I/O CS16 input of the AT bus, only 16-bit data transfers are employed by the system.

The only remaining control line extending to the digital circuit card is the Address Enable (AEN). This signal is used in conjunction with the I/O Read and I/O Write signals to gate the magnitude comparator (d5). By doing so, Direct Memory Access (DMA) conflicts are avoided between the tracking system and other internal computer modules of the P.C.

The first functional module in the ultrasound tracking system of the present invention is the controller card. A functional diagram is provided in Figure 3, which comprises Figures 3A, 3B, 3C, 3D, 3E, 3F, 3G, 3H, 3I, 3J, 3K, 3L, 3M, 3N, 3O, 3P and 3Q. The controller card employs the identical bus decoding scheme described above with reference to Figure 2, to govern and pace the functionality of the overall system. As with all of the digital cards, the controller is preferably a four layer Printed Circuit Board, (PCB), with the embedded layers being the power and the ground planes, respectively.

The operation of the card is as follows: A single Programmable Logic Device (PLD), c1, is programmed to cycle through a full two byte count at 32 MHz. The output registers of c1 are always active, so that the

counter is constantly outputting a count value between 0-65535. These outputs are used for both comparative and timing purposes throughout the system. For this reason, a highly reliable, fast-response PLD is required. Functional blocks c2-c5 latch predetermined values from the decoding circuitry, and compare them to the output of c1. Thus, upon system start-up, specific values are written to the registers of c2-c5, and once those values are matched by the output of c1, respective signals are generated to govern such features as Pulse Length (6-bit), Cycle Length (8-bit), and Inhibit (15-bit). As illustrated, the "equating" outputs of the low data byte comparison (c2 & c5) require an edge triggering flip-flop (c11) to hold their equated state. The output of the high data byte comparator (c4) is of sufficient duration to feed directly to c10 and c12. Using a 80 MHz clock, the Pulse Length signal is variable between 0μs and 2.00μs at 31.25ns increments, the Inhibit signal between 0μs and 2.048ms and 62.5ns increments, and the Sub-Cycle Length signal is variable between 0μs and 2.048ms at 16μs increments. Typical values are loaded into the registers of c2-c5 to best suit a given application, as discussed in greater detail below.

A second function of the c1 counter is to generate signals to a resetting 1-of-8 demultiplexer (c10) which in turn generates signals for application to c1 and c11 for resetting important system parameters. As can be seen in Figure 3, one of these parameters is the Mode function which governs the direction of data flow in the octal transceivers located on the remaining system cards discussed in greater detail below. Four c1 outputs are also used to cycle through the RCVR lines of the system, thereby providing a default of 16 receiver modules.

A second major role of the controller card is to manage the performance of the transmitter activation bits. Using a transmitter PLD (c6) as a preloadable up counter, a value indicative of the start transmitter is

latched to its input registers. Using an output of the c10 multiplexer as a clocking signal, c6 increments the six transmitter bits and outputs them both to a transparent buffer (c13), and to a 6-bit comparator (c9). Since the transmitter bits are sent to all three digital boards, as well as to the computer peripheral, the transparent buffer is required to avoid capacitive loading.

The ending transmit value is sent to the second side of the 6-bit comparator after it has been latched by c7. The octal latch (c8) is used simply to read the status of the transmitter bits by the controlling software. Once the 6-bit comparison is made and equated, a value is sent out to the local bus to clock the address incrementors on the remaining two digital cards. Although 6-bits are used for equating the transmitter increment bits, the default system allows for a 4-bit transmit value, corresponding to 16 possible transmitter channels. However, higher tier models of the ultrasonic tracking system of the present invention may employ up to 32 transmit cycles, corresponding to a 5-bit transmit value.

An 8-bit latch (c14) is also used by the system to generate and gate signals used to control address counters, interrupt controls, and trigger toggles.

Before most of the signals reach the local bus connecting the digital cards, they pass through c12, which is a simple "glue logic" PLD that ensures correct timing and signal polarity. This circuit module is also responsible for generating such parameters as the external system trigger for pacing and gating additional laboratory equipment.

Unlike the controller card which generates signals, the counter card (Figure 4) receives signals to consolidate the ultrasonic distance information. The counter card features an external db25 connection to the transmitter/receiver/transceiver peripheral unit (Figure 6). This twenty-four conductor, individually shielded

connection between the counter card and the peripheral transmit/receive unit carries the 4-bit transmitter increment signals (TX BITS), the transmitter Pulse Length signals (CS1 and CS2) as well as the sixteen default receive lines accommodating 16 transmitter channels (upgradable to 32). Again it should be noted that not all embodiments of the ultrasonic tracking systems according to the present invention, employ the full range of sixteen receivers. Therefore, where a receive line is unused, it is grounded so as to avoid interfering with the desired signals.

A functional diagram of the counter card or module is provided in Figure 4. The functionality of the counter module is best described in two stages, data writing and data reading. Examining the data writing stage, at precisely the moment when a valid signal is sent out by the external peripheral unit (Figure 6) to activate a transmitting crystal, the expandable bank of receiver PLDs (s10-s13) are reset to zero. These counters then count up from a zero value in accordance with respective internal 32MHz clocks. Each PLD (s10-s13) is connected to an individual receive transducer (Figure 6). As the 15-bit digital count in each PLD (s10-s13) is incremented past a predetermined value, an internal register within the PLD is activated which permits the reception of a receive signal. This predetermined value is used to implement the inhibit feature of the system and is designed to block out the electromagnetic interference caused by activating a transmit crystal. Once the mechanical vibration of the transmitted ultrasound is detected by a receive transducer it is converted to an electrical signal, amplified, filtered, and sent back to the appropriate counter PLD. This has the effect of stopping the digital count within the chip.

Next, a 1-of-16 multiplexer (s14) is activated for causing the output enable feature of the counters to be

sequentially activated. The captured digital value corresponding to the separation distance between the active transmitter and each connected receiver is then output in two bytes to the on-board RAM modules (s8 & s9) for temporary storage. Each time the RAM modules are activated, a default of sixteen locations are written to, according to the sixteen default receive signals. This cycle is then repeated for the next transmitter in the system. The incrementing of the RAM addresses is handled by s5, an octal buffer that outputs the 8-bit quantity representing the receiver/transmitter value at any time. Once all the transmitters in the system have been sequentially activated and recorded, the master cycle signal from the controller module triggers s1, the counter address incrementor PLD. This module then increments the RAM addresses to the next major block for the next transmit/receive master cycle.

Typically, the on-board RAM modules s8 & s9 are 8-bit by 131,072. Thus, in the default configuration of sixteen transmitters and sixteen receivers, the RAM is cycled through 512 times before reaching its capacity. Options exist for upgrading the on-board RAM to 8-bit by 524,288, so as to allow for 2048 complete transmitter/receive cycles. It should be noted that for most biological investigations, a repetition frequency of 200Hz is demanded. Thus, even with 256kB of storage capacity (128kX2), the on-board RAM can be completely filled in as little as 2.56 seconds. Consequently, the system of the present invention includes software functionality for downloading the stored information. This process is described in greater detail below.

To successfully realize the data reading stage, the counter card or module monitors the addresses that are automatically incremented to the RAM, and writes values to those addresses. This task is carried out by the octal transceivers (s2 & s3). Using the Mode function generated by the controller card, the addressing data

shifts from a reading to a writing state in accordance with the system timing. This gives the software the ability to activate any address in the RAM by simply writing out a 16-bit value to s2 and s3. Since the incrementing of the transmitter and receiver bits is automatic, there is no need to monitor their value. Thus, s4 can be simply an octal D-type flip-flop rather than an octal transceiver.

Once an address is written to the RAM for data output, the octal buffers s6 and s7 are opened to permit the PLD distance data to be passed along the low and high byte data paths into the I/O registers of the motherboard processor, then to the computer RAM, and finally to the hard disk for permanent storage. As can been seen in the system timing diagrams (Figures 7 & 8), the system is in a data output mode for the majority of each system cycle. Data input to the RAM occurs regularly, but only for 8μs intervals.

A second major function of the counter module or card is to provide an analog signal output. Despite the fact that digital data acquisition is superior in many ways to conventional analog circuitry, many users are required to work with analog signals. The Digital to Analog (DAC) converter (s17) is thereby provided as an option on the standard tracking units of the preferred embodiment. The DAC of the present invention operates as follows. Successive 8-bit values are latched into one side of the one of four magnitude comparators (s15b,d,f&h). These values are selectable through the software to permit any combination of transmitter/receiver output signals to be transferred to the four analog outputs. The opposite side of each comparator (s15b,d,f&h), is directly connected to the constantly cycling transmitter and receiver bits. When the value applied to both sides of a comparator are equal, the output is passed to a 4-to-2 line encoder (s16), before being passed to a DAC (s17). Under this

configuration, four distinct, 12-bit analog channels can be connected to an output port from the computer.

Finally the counter card or module also employ a "glue logic" PLD (s18) to coordinate the timing of the output enable signals, as well as the handling of thirty-two versus sixteen transmit channel capability.

The final digital card or module in the ultrasound system of the present invention is a synchronized Analog to Digital (A/D) converter card or module. During typical experiments, a user may wish to acquire more than the networked distance measurements. For example, in a cardiac investigation, analog signals such as pressure, ECG, and blood flow are also important. For this reason, an expandable A/D card is integrated into the tracking system of the preferred embodiment. The basic system is perfectly provided with four A/D channels. However, up to sixteen independent, 12-bit channels may also be provided ranging from ±10V.

As illustrated in Figure 5, the A/D module functions in virtually the same fashion as the counter card. Analog channels are fed in via a db25 cable connection (RGB174U coax connectors) to a1-a4. During the data input mode, all analog channels are internally converted and fed into two 8-bit by 131,072 RAM modules (a6 & a7). The RAM is automatically incremented using the four gated receiver bits (a13). An incrementing address PLD (a14), which receives the same clock as the counter address incrementor, is used to provide the remaining thirteen address lines to the RAM. Thus, every time a complete transmit receive cycle is performed, both the A/D RAM and the counter RAM registers are increased. During the write, or data output mode, an address is written to the respective octal D-type flip-flop (a12) and transceivers (a10 & a11) to access the proper RAM location. The octal buffers a8 and a9 are opened allowing the converted analog information to be transmitted along the high and low byte data buses to the computer storage device.

Finally, a controlling PLD (a5) is used to coordinate the timing signals on the A/D module. By congruously activating the A/D and counter information, it is possible to synchronize the digital distance information with the converted analog data.

A second function of the A/D card is to provide for direct digital inputs. Thus, up to four digital input channels may be received via latch a15 and monitored via octal buffer a8 during an experiment in the same fashion as the analog data.

The final hardware component in the ultrasonic tracking system of the present invention is the peripheral transmitter/receiver/transceiver unit, shown in Figure 6. Each peripheral board of the preferred embodiment possesses the capacity to support sixteen transmitters with eight receivers, or eight transceivers. These components are mounted onto a two-layer printed circuit board and connected to the host computer system by means of the twenty-four conductor, individually shielded computer cable discussed above. The external peripheral unit receives its transmit voltage level and biasing voltages from an independent power supply (t5). The unit also possesses a two colour LED to indicate whether the unit is in active or standby mode.

The peripheral unit works as follows. The digital signals from the computer to the unit are passed through pullup resistors to a CMOS 1-of-16 decoder (tr1). The decoded signals are then transmitted to selectable transmitters or transceivers. The variable duration Pulse Length signal is sent via filtering and biasing elements to the gate of an N-Channel Enhancement Mode VMOS transistor (Q3). The gate signal bridges the transmit voltage level to ground. This signal is then passed through a step-up isolation transformer (T1) and out of the peripheral unit via a coated, 32 gauge, multistranded wire (t2) to the transducer (x1).

The transducer itself (x1) is preferably a

cylindrical piezoelectric ceramic crystal, encapsulated with an electrically insulating sealant.

Using a network of similar receivers, the mechanical vibration from a transmitter crystal is detected and converted to an electrical signal. Each individual receiver circuit consists of step-up isolation transformer (T1), a two stage amplifier (A1) collectively providing a 48dB gain, a linear operational amplifier (tr3), a half-wave rectifier (D1) and a TTL level inverter (tr4A and tr4B). The digital waveform output from the TTL inverter is further isolated using an RF choke (t9) before it is transmitted back through the shielded cable to the appropriate LLDs.

According to the best mode of implementing the receiver, the single-ended amplifiers A1 may be replaced by a differential amplifier.

For a further understanding of the operation of the three-dimensional tracking system according to the present invention, a set of timing diagrams are provided in Figures 7 and 8. These figures illustrate the operation of the counter module (Figure 4) and the A/D module (Figure 5), respectively, during both the read and the write phases of operation. By default, the counter module actively acquires data for sixteen receivers during every Sub-Cycle Length. Conversely, the A/D data acquisition occurs only once during the same time interval, or once every Master Cycle Length. For simplicity, both timing diagrams are based on a transition from a transmitter "x" to a transmitter "x+1". Despite the apparent equal time-sharing between read and write cycles, in actual fact, the read cycle is significantly longer. More particularly, in the preferred embodiment the write cycle is limited to a 12μs window per sub-cycle.

Referring to Figure 7, the counter module (Figure 4) operates as follows. At the beginning of the read cycle, an impulse signal is sent out to the VMOS transistor (t4

in Figure 6) to activate a transmit crystal (x1). At precisely the same time, the associated counter PLD (s10a-d, s13a-d) is released from its count of zero and begins counting up at a clock speed of 32MHz. As discussed above, assertion of the CountPLD Inhibit signal prohibits electromagnetic interference between crystal leads by remaining at a logic low level. After a user-adjustable delay, the CountPLD signal changes state, thereby permitting the reception of a valid signal on the associated CountPLD RCVR line (RCVR0-3).

Once the first valid ultrasonic signal is detected and processed, the digital counter value is held on the PLD's output registers. The period of time for this distance count to occur is also variable in duration according to the user's specification. During this time, the transceivers which govern the read/write state of the system permit the downloading of the previously acquired digital distance values from the system RAM (s8,s9) (CountADD OE in a high state). By constantly monitoring the RAM addressing values using s2-s4 (Figure 4) the computer is able to keep track of the RAM status. As the RAM (s8, s9, Figure 4) approaches its capacity, a downloading is carried out during this read window.

The write window of operating the counter module is delimited by the 12μs active high Sub-cycle length signal. At the moment this signal is asserted, the following conditions occur: the CountADD OE signal changes state, indicating that the automatic addressing mode has been invoked, the CountBUS DIR signal changes states to allow the opposite flow of data through the transceivers, the CountBUS OE signal is invoked to activate the output registers of the addressing PLD (s1) the CountRAM OE signal is disabled to prepare the RAM (s8, s9) for data storage, the CountPLD OE signal enables cycling through each of the sixteen individual counters, and the CountRAM WE signal toggles to store each digital count value in RAM (s8,s9). The signals used to control

these functions are generated by various Boolean combinations of the control module counter (c1). As the default 4-bit receiver values are cycled through to produce the automatic RAM addressing, the CountBUS MODE signal is toggled to sample the current addressing value generated by the addressing PLD (s1, Figure 4). This value is stored in memory for proper downloading of data during the next write window. These functions are carried out during the first 8μs of the 12μs sub-cycle window.

Once all sixteen receivers (Figure 6) have downloaded their distance data to the RAM (s8, s9), the Master Cycle length value is incremented to indicate the next major cycle. At the same moment, the CountRAM WE signal is disabled along with the polling of the receiver distance values.

Finally the remaining 4μs expire putting the counter module back into its read mode, while resetting the receiver chips (CountPLD RST), and each of the incrementing counter bits from the controller card (Figure 3).

Using Figure 8 as a guide, the A/D module of the tracking system works in an identical fashion as the counter module, with one major exception. Write modes occur only during transition of the Master Cycle Length signal. When such occur, the default sixteen converted analog channels are cycled through and written to their respective RAM locations. The same A/D BUS MODE sampling occurs to ensure individual RAM chips are provided in banks of four channels, each chip is given a 2μs window in which the A/D CHIP SELECT signal is toggled low for data throughput. At the end of 8μs, the A/D parameters are reset to their write state while sampling of the analog channels begins once again. Once the transition has occurred to activate the next array of transmitters, the AD INTERRUPT signal drops to a logic low value to indicate that the conversions of the active channels are

complete.

The machine language codes that carry proper collection and processing of data acquired by the peripheral unit (Figure 6) are all preferably based around a x86 processor. The transfer of information through the system is both quick and seamless. Given a typical system with sixteen transmitters and sixteen receivers, or sixteen transceivers, 256 2-byte distance data saves are carried out every cycle of the Master Cycle length signal. Since the on-board RAM (s8, s9) in a typical unit is 128kB, the RAM has the capacity to save 512 Master Cycles before overwriting occurs. Since most clinical experiments typically demand a 200Hz data saving rate to sufficiently track biological motion, only 2.56 seconds of data saving can be correctly obtained.

Since this is clearly unsatisfactory for a typical data run, software routines have been written for the system of the present invention to periodically download the RAM modules during the read cycles of the system.

The transfer of information out of the system is as follows: each time the digital boards (Figures 3-5) are accessed, a total of 1024 bytes of data are secured. This 1kB is written to a dedicated 64kB buffer in the mother board RAM of the resident PC. Provided that the computer is not responsible for carrying out any additional tasks, the machine language code implemented thereon, also shunts this information to the display. This function can be performed 64 times before the RAM buffer of the mother board RAM is full. Once this happens, the system software performs a binary save of the data held by the 64kB buffer. At this stage, a standard disk-cache such as DOS's smartdrv.exe is activated to accept all of the 64kB binary files and commit them to the hard disk drive of the PC at the end of a data save command. Under this scenario, the only limit to the duration of a data save is the capacity of the disk cache. In this manner, the ultrasonic tracking

system of the present invention can be tailored to meet the specific needs of customers simply by providing additional memory to the base PC computer.

In addition to data saving and display software, the units according to the present invention preferably also utilize post-processing software routines to manipulate and visualize the saved binary data files.

A detailed description follows, relating to specific clinical applications of the system according to the present invention, and preferred catheter guidance implementation.

i) TRACKING OF CATHETERS THROUGH THE HUMAN CIRCULATORY SYSTEM

Catheters are devices that are inserted into the veins or arteries of humans as part of a procedure in which qualified hospital personnel remove blockages and obstructions from the circulatory system, or correct other related problems. The three dimensional digital ultrasound tracking system of the present invention may be configured to operate as a guidance system that can be used to track all types of catheters and surgical probes or instruments.

The current method of tracking catheters involves frequent exposure of the patient to an x-ray source. Each successive x-ray provides information on the movement of the catheter(s) within the patient.

In addition, contrast agents are frequently injected into patients during catheter procedures. These injections can provide further information on the actual location of the catheter and help physicians to plan subsequent catheter movements.

X-ray radiation and contrast agent injections are each potentially harmful to the health of the patient. Further, these methods of tracking are also time consuming, often introducing additional stress and patient complications.

Three primary advantages result from the present invention when used to track catheters:

1) The need for using harmful x-rays and contrast agents are virtually eliminated while determining the location of catheter(s) within the patient;
2) Procedure times are substantially reduced with benefits in both safety and cost; and
3) Extremely exact positioning of the catheter is obtained as a result of the theoretical resolution of 19μm.

The basic principle of the Catheter Guidance System (CGS) of the present invention involves the establishment of an internal reference frame and an (optional) external reference frame in three dimensions from which the catheter can be tracked. Using the transceiver hardware and the triangulation algorithm discussed above, the crystal positioning data can be captured and processed to resolve the location of the catheter of interest.

To further facilitate visualization of the catheter location by the administering hospital staff, the crystal position information may be overlaid onto a recorded video loop of the region of interest. This video loop can be generated from an imaging modality such as x-ray or scanning ultrasound and is meant to illustrate the natural movement of the biological structure(s) during one or more cardiac cycles. In addition to this, the video loop can also depict the position of the opaque piezoelectric transducers (X1) used by the CGS to track the catheters. These piezoelectric transducers serve as "landmarks" (whether they are internal or external). By identifying these "landmarks" in the video, the positions of the guiding piezoelectric crystals can be correlated with the captured video information. In this fashion, the imaging process and the ultrasound positioning process can be linked for one or more complete cardiac cycles. Once the imaging modalities are linked, the

graphic video loop can be substituted for the potentially harmful imaging (and contrast agent injections) throughout the rest of the procedure.

Typically, the catheters used in these procedures are introduced into the body through the femoral vein. From the point of entry, the catheters are pushed and steered, using internal guide wires to the region of interest, usually the human heart. Physically, the catheters are constructed with a biocompatible plastic and feature such options as electrode sensors and actuators for detecting the cardiac activity in electrophysical operations to inflatable balloons for arterial expansion in angiology procedures.

A concept that is of importance in implementing the Catheter Guidance System (CGS) application of the present invention is the merging of piezoelectric transducers and the imaged catheters. Since the design of catheters used for these procedures are well established, consideration has been given to the design of the ultrasonic sensor, including the following aspects:

1. The type of piezoelectric material used.
2. The encapsulation procedure.
3. The shape of the transducer.
4. The operating frequency.
5. The activation procedure.

The material selected for use in both the internal and external reference frames must possess superior transmission and reception characteristics in order to properly communicate with each other. Since operating temperatures inside the human body are not a major concern, a higher dielectric material with lower Curie temperature can be employed. Essentially, this provides for an increased ultrasonic output per input volt. The preferred material for this purpose is PZT (lead zirconate titanate).

Since these materials are non-biocompatible, an appropriate encapsulation material is used. The

encapsulant must not only be biocompatible, but must also possess an acoustic impedance that does not hinder the ultrasonic wave propagation. This is of key importance for the internal reference frame transducers or crystals. The external reference crystals require an acoustic coupling gel similar to that used for standard B-type ultrasound scans.

Omni-directional ultrasound transmission, cylindrical crystals (X1) are used for the internal reference frame. The cylindrical transducers maintain omni-directional radiation patterns while demonstrating excellent transmission and reception characteristics. Externally, larger disk-type crystals are employed.

Due to the variable software controls of the ultrasonic tracking system according to the present invention, activation frequency can be optimized for maximum performance and efficiency. In the case of the internal reference frame, smaller distances are monitored, therefore higher activation cycle frequencies can be used. The opposite is true of the external reference frame.

For both reference frames, the method of transducer activation is identical. This process in discussed in detail above with reference to Figure 6. An insulated conducting wire is used to carry the activation impulse from the control unit to the transducers. In the case of the catheter crystals, the signal wires are internally routed through the same sheath as the steering guide wires. Finally, placement of the crystals is contingent upon which reference frame is employed. Figure 9 illustrates the placement of the cylindrical transducers with respect to the catheter tip, according to the proposed catheter guidance application of the present invention. As can be seen, two ultrasonic crystals (X1, X2) are used on each catheter. This permits the crystals to communicate with each other, as well as to every other internally placed crystal in the region, and also the

external crystals. By using the information from two concentric crystals on a catheter, vector data can be acquired to illustrate not only the position of the tip, but also the direction. By using three or more crystals, the curvature and 3-D shape of the catheter can be reconstructed.

As can be seen, the two (or more) crystals (X1, X2) are permanently positioned concentrically along the axis of the catheter (C) at an appropriate separation distance for indicating catheter location, orientation and curvature. The piezoelectric material can be affixed to the catheter with a variety of means, such as a press-fit, bonding, costing or vapour deposition.

One embodiment of the crystal arrangement of Figure 9, is illustrated in cross-section in Figure 10. A multi-lumen catheter 100 (or any other suitable probe) is inserted into the body, such that the 3-D shape or extent of the device can be measured or represented, as discussed in greater detail below. As an alternative to using piezoelectric crystals 110, film patches may be used, such as PVDF (polyvinyldifluoride). PVDF is not a crystalline material, but a polymer. It is therefore made in sheets or strips and can be affixed to the catheter as a thin, rectangular patch of film. Its principle of operation is similar to that of PZT. PVDF is essentially a piezoelectric material that can be easily moulded into different shapes and configurations.

The catheter 100 can be fabricated from any suitable polymer. A wire or wires (not shown) can pass through one of the lumens of catheter 100, or can be incorporated into the polymer during manufacture. The crystals 110 can be partially or completely embedded into the wall of the catheter 100 or can be affixed to the surface thereof. The crystals are preferably mounted on a suitable lossy backing 130 to which electrical conductors 140 are connected. The crystals 110 can also be provided with a dome-shaped polymer lens 150 affixed thereto.

As discussed above, according to one aspect of the present invention, a software system is provided which, in combination with the multiple crystal probe of Figure 10, can be used to display existing or user acquired image information as a template through which, or against which the position, shape or motion of the probe or catheter 100 can be referenced inside the body or organ. This 3-D visualization algorithm is shown in Figure 11.

Portions of the "Path 1" algorithm run both on the PC that houses the circuit boards embodying Figures 2-6 ("PC"), and in a separate computer (not shown) or workstation ("WS") with additional processing power and 3-D visualization capability.

The process begins with the PC that houses the digital circuit boards. The PC completes a data acquisition cycle and has many numbers in memory, each corresponding to a time that the ultrasound pulse took to travel the distance between all combinations of crystals within the measuring volume (module 1100). Within this volume, there exist a number of transducers mounted on the catheters or probes being traced(see Figure 9), as well as transducers on the patient in strategic locations (see Figure 15). This propagation delay measure, or "signal", can be corrupted with noise, and some signal processing may be done to recover the likely values of the original signal (module 1102). This can be done by testing for the range of the signal, and by smoothing or predictive fitting to previous trajectories of the data signal.

Following signal processing, the improved "signal" is converted in the PC according to the methodology discussed in detail above with reference to Figures 2-8, into "data" that correspond to real measurements of distance between the pairs of transducers. This is done by converting the propagation delay into a distance measurement by taking into account the speed of sound in the particular material. This conversion can be a simple

linear process, or can be scaled non-linearly, depending on the likely material through which the sound is propagating. The output of this conversion is "data" of distance measurement (module 1104).

This data can still be corrupted, if there are consistent signal drop outs due to poor signal propagation throughout the measurement volume. However, there usually are more than enough individual distance measurements available to reconstruct 3-D location of the transducers, since many extra distances between transducer pairs are obtained. This data filling can be done using a "multidimensional scaling" algorithm, or variants of it. This process essentially fills in the missing data, based on the many combinations of other distance measurements that are available. This is an iterative process (module 1106) and is typically done on the computer workstation ("WS"). The output of this pre-processing is more complete data.

The data output from module 1106 is then converted into 3-D coordinates of the points that are being tracked, using geometric algorithms, in a well known manner (module 1108), resulting in "3-D coordinates".

These 3-D coordinates are passed to a scene evaluation module that takes the 3-D coordinates, and based on previously obtained information from user input or a library data base, arranges the points in the correct sequence to construct 3-D structures (module 1110). For example, it would be known in advance that, for example, crystals numbered 3, 5, 6 and 9 are mounted on a predetermined one of the catheters, so these points in space would be connected together. The scene evaluation module would then construct a 3-D image that would represent the position, size and shape of the catheter, based on the 3-D location of the individual crystals affixed to the catheter body. In a similar manner, the catheter crystals can be located in such a way as to build up a 3-D surface patch of the inside of a

beating ventricle, by simply dragging the catheter along the wall of the ventricle in the area of interest. The output of this module is a "3-D scene" that contains many of the elements being processed, some of which are the catheters and the individual crystals affixed to the patient (Figure 15).

The 3-D scene is then rendered by a 3-D graphics subsystem (module 1112) and output to a viewing monitor.

If the catheters are not moving, the 3-D scene does not need to be re-rendered or updated in any way. Therefore, a module 1114 is provided that detects any changes in the stream of incoming data. If there are changes, this module signals another module 1116 that determines whether the new 3-D coordinates that have been acquired and processed by the WS have changed significantly from the previously rendered objects or scene. If they have, then this updated information is incorporated into the existing model of the 3-D scene and passed onto the rendering module 1112.

The display of the catheters is only one component of the scene visualization. These catheters need to be displayed in reference to some recognizable features, such as 2-D or 3-D images. The system of the present invention therefore also has the capability of inputting externally acquired images in 2-D or 3-D form. These images can already be in digital form, or they can be input directly from a live video source through a frame grabber. The algorithm for effecting this external image acquisition is shown schematically in Figure 11 as "Path 2", beginning with an input of the external image modality (module 1118).

These image sets must first be converted into a format that is suitable for processing and manipulation inside the WS (module 1120). The image data sets that are produced are then "digital images" that can be manipulated further inside the WS.

These images may need to be pre-processed in some

way to make them fit into the 3-D scene. If they are to be shown with the catheters, they may need to be scaled appropriately. If the images are to be moving, they need to be updated or reformatted in memory so that they can be output to the 3-D scene rendering in the correct sequence. Any such manipulation is effected by the preprocessing module 1112. For video information, an appropriate sync signal is required for sequencing (module 1124).

One of the most critical aspects of the 3-D scene evaluation is the placement of the 3-D catheter graphic in the correct spatial relationship with the underlying images. This is done by registering features in the images, such as the reference crystals, with their position in the measuring coordinate system. This process uses standard coordinate transformation operations and only requires for input information as to which feature in the image space corresponds to the same feature (crystal) in the measurement space. This information can be input by the user during initial set up (module 1126), or can be automatically detected using image processing algorithms. Once the catheter graphics are registered with the underlying images, the information describing the image set that is to be displayed at a given instant is sent to the 3-D scene evaluator (module 1110). Additionally, to test whether new image information has arrived and needs to be used, an appropriate signal is sent to the module 1114 that detects changes and instructs the system to update the scene.

For moving image sets, such as 2-D video loops, or 3-D ultrasound loops, the motion of the data sets need to be output at a rate that continually matches that of the patient heart beat (Path 3 in Figure 11). If the data set that is played back is not in sync with the current state of the heart, then the 3-D scene will not be displayed in a recognizable format and abdominal motion

of the catheters relative to the images, will result. The first step in synchronizing "video loops" with the patient's heart beat is to input the raw ECG signal into the processing computer (module 1128).

The signal is converted into data using a standard A/D converter (module 1130).

This data is then fed into sync generator module 1124, which includes an algorithm that produces a timing signal that corresponds to the current activity of the heart. For example, the sync generator module 1124 can activate a memory location or an input port, or generate an interrupt, at the precise time that a QRS complex is identified. The sync generator module 1124 does this by following the input signal and testing for large rates of change, combined with zero crossing and other information relevant to the expected morphology of the signal. The sync generator module 1124 can run in the PC, the WS, or in a completely external device designed to identify QRS complexes and output a sync signal to the WS.

Running on top of all of these function is the user interface (module 1126), discussed briefly above. This module checks for user input from a keyboard and mouse (not shown) and sends the appropriate information to the 3-D scene generator (module 1110), and to other modules that can be affected by the user input. Typically, user input would involve the modification of the type of information that is to be displayed on the computer screen, and not the way the signals are processed. The user can also assist in registering the catheter location with the underlying image set.

The system also has a provision for the merging of other auxiliary data information, such as the display of electric potential over any 3-D structures that are displayed (module 1132). This information is peripheral to this main system, and is assembled in a way that can be readily incorporated into the 3-D scene evaluation module 1110.

According to a first alternative embodiment, a cylindrical or ring shaped ultrasonic transducer is provided, as shown in Figure 12, for attachment to a catheter or other probe, for the purpose of tracking its position in three dimensions inside the body or organ. As shown in Figure 12, the cylindrical crystal or transducer comprises a lossy backing 1200 on which the piezoelectric material 1210 is disposed. The lossy backing prevents excessive ringing of the PZT material. As the crystal is energized, an ultrasound wave propagates both forward and backward. When the ultrasound wave reaches the interface between the crystal and the outside medium (water or air) it meets an impedance mismatch and most of the wave bounces back into the crystal. This is why the crystal rings for many cycles. The lossy backing enables the backwards travelling wave to exit the crystal (i.e. it has similar impedance) and dissipate with minimal reflection. The backing material is typically epoxy with tungsten powder mixed in. Ideally, the backing material should be many times thicker than the crystal itself.

The piezoelectric material 1210 is coated with a ¼ wavelength matching layer of ultrasound conductive material 1220 (e.g. polymer material). Electrically conductive wires (not shown) are connected to the piezoelectric material. As discussed above, the forward propagating wave of ultrasound typically bounces off of the crystal/water interface, unless some impedance matching material is provided. The purpose of this material is to provide an intermediate impedance between water and PZT so that at each material interface there is less mismatch, and more of the ultrasound wave propagates forward, rather than reflecting backward. Typically one or two layers are deposited on the crystal with intermediate impedances. The thickness of the layers must be ¼ of the wavelength of the ultrasound wave so that destructive interface occurs between the reflected

waves, thus reducing the ringing of the crystal.

If PVDF is used for the piezoelectric material 1210, then the film or material can be wrapped around the catheter or other device, or could be molded or cast directly upon it, essentially becoming a component of the device. It is also contemplated that an existing catheter or other device can be retrofitted with PVDF material in accordance with the embodiment of Figure 12, to facilitate tracking thereof inside the body.

It is also contemplated that the piezoelectric film (e.g. PVDF) can be wrapped, cast or deposited over the catheter in several locations.

According to a second alternative embodiment, a ring-shaped array of crystals, or a segmented single crystal can be provided, as shown in Figure 13A, with configuration that enables the ultrasound energy to radiate at a large angle away from perpendicular to the axis of the cylinder, such that the crystal array functions as a line source of ultrasound energy, or as a collection of point sources, each radiating ultrasound energy in a fan substantially away from the plane of the cylinder, as shown in Figures 13B and 13C.

The crystal is provided with a plurality of facets 1300, each being in the order of a millimetre in size, so as to resonate individually at a resonant frequency dictated by the size of the facet, rather than the size of the entire ring. The ring is plated with a conductor 1310 on both sides, as depicted in Figure 13, rather than on the inner and outer surfaces thereof.

According to a third embodiment, a composite ultrasound transducer is provided comprising a PZT substrate 1400 on a lossy backing 1410. A PVDF film 1420 is bonded to the PZT substrate 1400. This embodiment offers the advantages of high transmitting efficiency of PZT (i.e. conversion of electrical energy into acoustical energy) and the high receiving efficiency of PVDF (i.e. conversion of acoustical energy into electrical energy).

It is contemplated that the PVDF and PZT films 1420 and 1400 can be directly connected (as shown), or electrically isolated with appropriate layers of insulator or conductor therebetween. It is also contemplated that the PVDF or PZT structure can be in the form of a slab, as shown in Figure 14, or can be cylindrical, as in the embodiments of Figures 9, 10, 12 or 13.

Figure 15 illustrates the manner in which the external crystals are placed. The purpose of the external reference frame is to monitor the accuracy and movement of the crystals on the catheters. As can be seen, the larger disk crystals are placed in a harness-type apparatus that is worn around the chest by the patient during the procedure. A number of radio-opaque transducers are fastened to the harness in locations suitable for optimal signal reception through the chest cavity.

Alternatively, the chest transducer can be affixed directly to the patient at strategic locations, using self adhesive mounting film or adhesive tape, so that the heart, liver, breast and other organs can be sampled.

Under the disclosed configuration, it is possible to monitor the position and direction of the catheters that are introduced into the human circulatory system. This methodology significantly reduces both the risk and the procedural time associated with current electrophysiology and angiology operations, while providing improved positioning accuracy.

ii) TRACKING OF INTRAVASCULAR ULTRASOUND CATHETERS THROUGH CORONARY AND THROUGH PERIPHERAL VASCULATURE

The tracking of catheters can be extended into the field of intravascular ultrasound. If a vessel has multiple stenoses, it is important to know exactly which one is being imaged with the intravascular ultrasound device. The traditional method involves the injection of

contrast agent under fluoroscopy, but this method suffers from the above mentioned risks. The intravascular ultrasound catheter can be easily tracked by using a low frequency transmitter mounted near the imaging head of the catheter. By having a dual display showing the view inside the vessel with the ultrasound, and the position of the imaging area relative to the gross morphology of the vessel on the angiogram, the angiologist can better treat the lesions and reduce the procedural risks to the patient.

iii) TRACKING THE BIOPSY NEEDLES OR BIOPSY CATHETERS

The tracking of biopsy catheters is of particular interest, because occasionally the biopsy "bites" are taken from the wrong part of the heart, liver, breast or other tissue or organ to be sampled. In the case of the heart, sometimes a piece of the coronary artery is cut off, or the cardiac valve is damaged, with obvious complications to the patient. By following the path of the biopsy device, using single or multiple angiograms, x-ray images, or ultrasound image sets and real time overlay of the tracked catheter, the biopsy procedure itself can be made more precise and safe.

Needles can also be tracked with ultrasound, such as when cannulating the carotid artery or the femoral artery. An existing unit is available for this procedure, but it relies on having the needle cast a faint shadow in the B-mode ultrasound image. This shadow is not readily visible to the untrained eye, and has obvious limitations in precision. A true 3-D tracking of the needle under real time ultrasound using the principles of the present invention greatly simplifies such procedures.

iv) GUIDING OF PROBES DURING STEREOTACTIC SURGERY

During some delicate surgeries, particularly in the brain, it is important to know the 3-D position of the

probe inserted into the head very precisely. The conventional method involves rigidly fastening the patient's head to a stereotactic frame by placing screws and pins into the patient's skull. The patient, with the frame attached, is then imaged using MRI or CAT, and a 3-D reconstruction of the patient's head is created. Pathologic tissue or lesions, such as tumours, are then precisely located relative to the frame. The patient is then taken to the operating room and the required instruments, such as electrodes or ablators, are affixed to guides that allow the instruments to be moved along the specific paths into the patient's head. Once the surgical instrument is in place, the lesion can be corrected, destroyed or treated in some way.

This approach is tedious, costly and subject to measurement error in translating the 3-D coordinates from the images to the actual position of the probes within the stereotactic frame.

An alternative to this approach involves the use of a 3-D wand. This instrument consists of an articulating metallic arm that is rigidly affixed to a surgical table. Each of the joints in the arm has an angular position sensor so that the 3-D coordinates of the tip can be calculated from the joint sensors. By matching visual landmarks on the patient's head to the same landmarks on the 3-D image using the probe, the head and the image can be registered with each other. The probe is then used during surgery to hold instruments and guide them into the brain in a manner similar to the stereotactic frame. The advantage of the wand is that it has many more degrees of freedom, and can be held by the surgeon. The disadvantage is that it is very expensive, and very bulky. Also, the position of the probe tip is always only as precise as the original calibration against the patient's head. The patient's head must remain rigidly affixed to the table to which the articulating arm is fixed.

A further application of the tracking system according to the present invention involves placing reference crystals anywhere on the patient's head, and several crystals on the probe. As the probe is inserted into the head, its movement relative to the reference crystals can be tracked in real time 3-D. The crystals affixed to the head can be imaged along with the patient, simplifying the registration process, and since they are affixed to the head, movements of the head relative to the operating table do not pose a problem with respect to tracking.

Patients with electrical disturbances of the brain, such as epilepsy, need to have the location of the epilepsy mapped properly prior to surgical intervention. This is done by placing surface electrodes subdurally over the brain. These electrodes are pushed along the brain through small access holes drilled into the skull, and their location is often difficult to know precisely. By placing transmitter or receiver crystals on the electrode pad, and complementary electrodes on the outside of the skull, according to the principles of the present invention, the motion of the electrodes can be tracked in real time, or can be verified with images of the brain taken previously. This greatly simplifies the mapping of brain wave activity anomalies.

vi) TRACKING OF AMNIOCENTESIS NEEDLES

Another application of the real time tracking system of the present invention in the tracking of biopsy needles for use in the procedure of amniocentesis. A 3-D or 2-D image set of the fetus with the motion of the needle displayed, can increase the precision and speed of the procedure and can prevent injury of the fetus.

vii) MEASUREMENT OF CERVICAL DILATION

The onset of labour can be a well controlled process. During the first set of contractions, nurses

periodically track the dilation of the cervix. This is done presently by checking the width of the cervix manually. Specifically, one or two fingers are inserted to feel for the head of the fetus, and estimate the degree of cervical dilation. These dilation measurements are done at regular intervals and a time/dilation curve can be plotted. This allows the obstetrician to plan the delivery, as the major contractions come once the rate of cervical dilation increases.

The plotting of such dilation curves can be automated and managed for many mothers in the delivery room by measuring the dilation of the cervix with ultrasonic crystals according to the principles of the present invention.

In this way, a maternity ward can be networked so that progress of many mothers through labour can be monitored remotely by a few nurses at a central station. the obstetrician is thus able to predict which patient is due to deliver at what time and can plan his or her activities more precisely.

viii) ASSESSMENT OF JOINT MOTION TO LOOK AT STABILITY OF THE KNEE

In some orthopaedic procedures, the stability of the knee needs to be evaluated quantitatively during walking. Knee stability can be assessed through manual manipulation, but only a complex imaging technique can map the motion of the knee during walking. By implanting the sonomicrometer crystals of the present invention in the knee, the relative motion of the joints can be measured quantitatively during normal gait, and any surgery to augment ligaments can be better planned.

ix) ASSESSMENT OF MYOCARDIAL CONTRACTILITY FOLLOWING SURGERY

Following open heart surgery to repair the myocardium or the coronary arteries, the patient has to

be monitored to adjust the levels of drugs that are administered. This is referred to as "titration" of drugs. The myocardial contractility is measured with a Swan-Ganz catheter and the drug level adjusted to obtain optimal cardiac function. Unfortunately, the Swan-Ganz catheter measures pressure, which is an indirect measure of contractility and can produce inadequate data.

A pair of sonomicrometer crystals, however, provide a direct measure of myocardial contractility if attached to the beating ventricle. These transducers can be attached to the myocardium during open chest surgery and can measure the contractility of the heart directly while the chest is open. The leads can then be strung out through the chest wall, and monitoring of myocardial contractility can continue for a few hours or days post operatively. This approach replaces the less precise Swan-Ganz catheter, and can be used to titrate the drugs given to the patient. If the crystals are properly positioned, they can be removed post operatively by pulling on them, in much the same way that pacing electrodes are removed.

Alternative embodiments and variations are possible within the sphere and scope of the invention as defined by the claims appended hereto.

I Claim

1. A digital ultrasound tracking system, comprising:

a) a plurality of spaced apart ultrasound transceivers;

b) a controller module connected to said plurality of spaced apart ultrasound transceivers for selectively enabling individual ones of said transceivers to operate as one of either a transmitter or a receiver, and for energizing each respective transmitter such that each said transmitter generates an output oscillation signal which is detected by at least one associated receiver; and

c) a counter module connected to said plurality of spaced apart ultrasound transceivers and said controller module, said counter module including a high speed counter associated with each said associated receiver for generating a digital count value corresponding to an elapsed time between said energizing of the transmitter and detection of said output oscillation signal by said at least one associated receiver.

2. The digital ultrasound tracking system of claim 1, wherein said controller module further includes circuitry for adjusting repetition rate of said energizing of each transmitter.

3. The digital ultrasound tracking system of claim 1, wherein said controller module further includes circuitry for adjusting duration of said energizing of each transmitter.

4. The digital ultrasound tracking system of claim 1, wherein said controller module further includes circuitry for inhibiting each said high speed counter for a variable period after energizing of each said transmitter, thereby avoiding count errors due to electromagnetic interference resulting from energizing of each said transmitter.

5. The digital ultrasound tracking system of claim 1, wherein each of said transceivers further comprises:

d) a transmitter input for receiving a digital input signal from said controller module;

e) a step-up isolation transformer for translating said digital input signal into a crystal energizing signal;

f) a piezoelectric crystal for receiving said energizing signal in transmit mode and in response generating said output oscillation signal, and for detecting said output oscillation signal in receiver mode and in response generating and applying an input oscillation signal to said step-up transformer;

g) circuitry connected to said step-up transformer for amplifying and converting said input

oscillation signal to a digital output signal; and

h) a receiver output for transmitting said digital output signal to said counter module for halting the high speed counter associated therewith at said digital count value.

6. A three dimensional ultrasound tracking system for attachment to an object whose position is to be monitored, comprising:

a) three ultrasound transceivers mounted to said object so as to form a first two-dimensional plane;

b) a fourth ultrasound transceiver mounted to said object on one side of said two-dimensional plane;

c) a plurality of ultrasound transmitters arranged in three-dimensional space around said ultrasound transceivers; and

d) circuitry for (i) sequentially enabling respective ones of said transmitters to generate ultrasound signals for reception by said ultrasound transceivers, (ii) sequentially measuring elapsed time between generation of said ultrasound signals and reception thereof by respective ones of said transducers, and (iii) calculating via triangulation from said elapsed time position and orientation of said object relative to said plurality of ultrasound transmitters.

7. A catheter guidance system, comprising:

a) at least three piezoelectric crystals

mounted adjacent a tip of a catheter for insertion into a patient, whereby said at least two piezoelectric crystals form an internal reference;

b) a plurality of additional piezoelectric crystals located externally of the patient so as to form an external reference frame;

c) circuitry for (i) sequentially enabling respective ones of said piezoelectric crystals to generate ultrasound signals for reception respective other ones of said piezoelectric crystals, (ii) sequentially measuring elapsed time between generation of said ultrasound signals and reception thereof by said respective other ones of said piezoelectric crystals, and (iii) calculating via triangulation from said elapsed time, position and orientation of said catheter relative to said plurality of additional piezoelectric crystals.

8. The catheter guidance system of claim 7, wherein each of said two piezoelectric crystals are fabricated from a high dielectric material having low Curie temperature.

9. The catheter guidance system of claim 8, wherein said material is lead zirconate titanate.

10. The catheter guidance system of claim 7, wherein each of said piezoelectric crystals is coated with a layer of radio-opaque material for contrast with

said catheter during x-ray imaging of said patient.

11. The catheter guidance system of claim 10, wherein each of said piezoelectric crystals coated with a layer of radio-opaque material is further encapsulated in biocompatible material having an acoustic impedance which does not interfere with propagation of said ultrasound signals.

12. The catheter guidance system of claim 7, wherein each of said two piezoelectric crystals is cylindrical for generating omnidirectional ultrasound radiation patterns.

13. The catheter guidance system of claim 7, wherein each of said additional piezoelectric crystals is disk-shaped and of larger size than said two piezoelectric crystals.

14. The catheter guidance system of claim 7, further comprising a coated stainless steel wire connecting said two piezoelectric crystals to said circuitry, said wire being disposed in an internal sheath within said catheter which also houses steering guide wires of said catheter.

15. The catheter guidance system of claim 7, wherein said two piezoelectric crystals are positioned

concentrically along an axis of said catheter and spaced a predetermined distance apart to prevent signal interference therebetween and to indicate shape and curvature of said tip of said catheter.

16. The catheter guidance system of claim 7, wherein said additional piezoelectric crystals are mounted to a harness adapted to be worn by said patient.

17. The catheter guidance system of claim 15, wherein said piezoelectric crystals are at least partially embedded into a wall of said catheter, said catheter being a multi-lumen catheter.

18. The catheter guidance system of claim 17, wherein said piezoelectric crystals are mounted on a lossy backing and electrical conductors are connected to said piezoelectric crystals.

19. The catheter guidance system of claim 18, further comprising a dome-shaped polymer lens affixed to each said piezoelectric crystal.

20. The catheter guidance system of claim 7 wherein at least one of said piezoelectric crystals is of cylindrical shape comprising piezoelectric material disposed on a lossy backing, the piezoelectric material being coated with a one-quarter wavelength matching layer

of material which is conductive to ultrasound.

21. The catheter guidance system of claim 20, wherein said piezoelectric material is PVDF which is wrapped, cast or deposited directly upon the catheter.

22. The catheter guidance system of claim 7, wherein at least one of said piezoelectric crystals comprises one of either a ring-shaped array of crystals, or a segmented single crystal having configuration that enables ultrasound energy to radiate at a large angle from perpendicular, such that said array or segmented single crystal functions as one of either a line source of ultrasound energy or a collection of point sources, each radiating said ultrasound energy in a fan substantially away from the plane of said one of either a ring-shaped array of crystals or segmented single crystal.

23. The catheter guidance system of claim 22, wherein said array of crystals or segmented single crystal is provided with a plurality of facets, each being in the order of a millimetre in size, so as to resonate individually at a resonant frequency dictated by the size of respective ones of said facets.

24. The catheter guidance system of claim 22, wherein said ring-shaped array of crystals or said

segmented single crystal is plated with a conductor on opposite sides thereof.

25. The catheter guidance system of claim 7, wherein at least one of said piezoelectric crystals comprises a composite ultrasound transducer having a PZT substrate disposed on a lossy backing, and a PVDF film bonded to said PZT substrate.

26. The catheter guidance system of claim 25 further comprising one or more layers of either insulator or conductor between said PZT substrate and said PVDF film.

27. A three-dimensional visualization system, comprising:

a) a catheter or probe having multiple ultrasonic transducers mounted thereon;

b) a plurality of further transducers in strategic locations forming an external reference plane relative to said multiple ultrasound transducers;

c) sonomicrometer means for generating three-dimensional coordinates of said multiple ultrasound transducers relative to said reference frame;

d) image acquisition means for one of either locally generating one or more digital images, or receiving one or more analog images from an external imaging modality and in response generating said one or

more digital images thereof; and

e) a three-dimensional evaluation and graphics subsystem for receiving said three-dimensional coordinates and said digital images, arranging said coordinates, and in response rendering said one or more digital images as a template against which said three-dimensional coordinates of said catheter or probe are displayed.

28. The system of claim 27 wherein said sonomicrometer means further comprises:

i) ultrasound distance measurement means for measuring propagation delay between respective ones of said transducers and said external reference frame;

ii) signal processing means for correcting said measured propagation delays in the event of noise corruption;

iii) a digital sonomicrometer for converting said propagation delays into distance measurements and in response generating distance measurement data signals;

iv) preprocessing means for effecting multi-dimensional scaling of said distance measurement data signals to fill in any missing portions of said distance measurement data resulting from signal drop out due to poor signal propagation; and

v) three-dimensional calculation means for converting distance measurement data scaled by said preprocessing means into said three-dimensional

coordinates.

29. The system of claim 28 wherein said image acquisition means further comprises:

vi) digitization, data and reformatting means for converting said analog images from said external imaging modality into converted digital images suitable for processing and manipulation; and

vii) further preprocessing means for scaling said converted digital images and outputting scaled digital images to said three-dimensional graphics subsystem.

30. The three-dimensional visualization system of claim 29 further comprising:

viii) means for receiving an electrocardiogram signal;

ix) analog to digital converter means for converting said electrocardiogram signal into a digital ECG signal; and

x) a sync generator for receiving said digital ECG signal and in response generating a timing signal for output to said three-dimensional graphics subsystem.

31. The three-dimensional visualization system of claim 30 further comprising a user interface for receiving user input from a keyboard and mouse and in

response generating manipulation control signals to said three-dimensional graphics subsystem.

32. The three-dimensional visualization system of claim 31 further comprising an auxiliary data user system for receiving auxiliary data information for transmission to said three-dimensional graphics subsystem.

33. The three-dimensional visualization system of claim 32 further comprising means for detecting changes in said signals output from said sonomicrometer means, image acquisition means, sync generator means, user interface means and auxiliary data means, and in response generating an output signal, and evaluation means for receiving said output signal, determining the existence of any extensive change in said output signal and in response signalling said three-dimensional graphic subsystem.

34. The three-dimensional visualization system of claim 27 wherein said three-dimensional evaluation and graphics subsystem arranges said coordinates to form a three-dimensional surface patch defining a moving shape of a beating ventricle against which said catheter or probe is moved.

35. Use of the three-dimensional visualization system of claim 27 for tracking said catheter or probe

through a human circulatory system.

36. Use of the three-dimensional visualization system of claim 27 for intravascular tracking of said catheter or probe through coronary and through peripheral vasculature.

37. Use of the three-dimensional visualization system of claim 27 for tracking of a biopsy catheter.

38. Use of the three-dimensional visualization system of claim 27 for guiding said catheter or probe during stereostatic surgery.

39. Use of the three-dimensional visualization system of claim 27 for tracking amniocentesis needle.

40. Use of the three-dimensional visualization system of claim 27 for measurement of a cervical dilation.

41. Use of the three-dimensional visualization system of claim 27 for assessment of joint motion in the human knee.

42. Use of the three-dimensional visualization system of claim 27 for assessment of myocardial contractility following surgery.

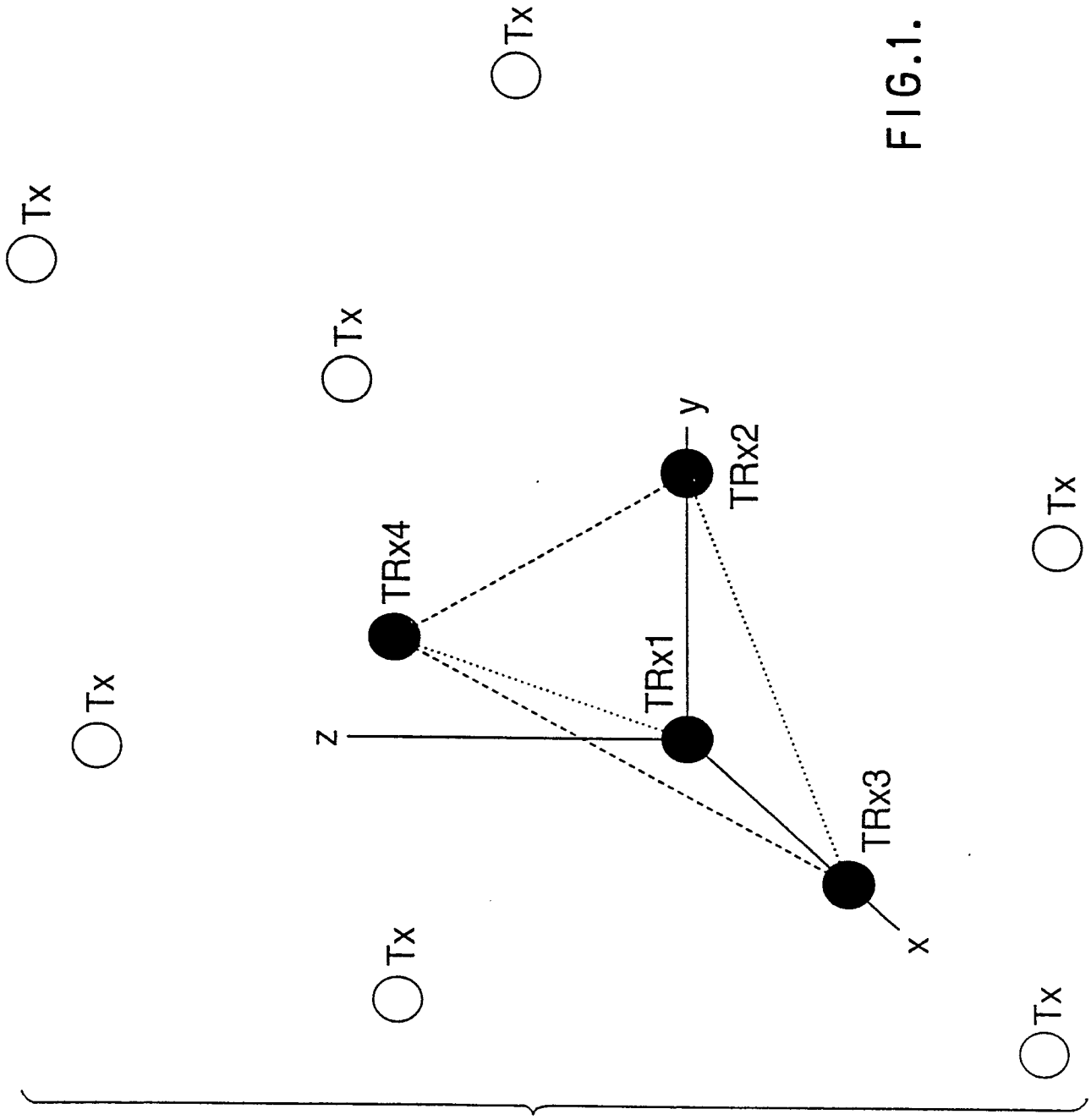

FIG.1.

FIG.2A.	FIG.2C.
FIG.2B.	FIG.2D.

FIG.2.

	FIG.3A.	FIG.3B.	FIG.3C.
FIG.3D.	FIG.3E.	FIG.3F.	FIG.3G.
FIG.3H.	FIG.3I.	FIG.3J.	FIG.3K.
FIG.3L.	FIG.3M.	FIG.3N.	
FIG.3O.	FIG.3P.	FIG.3Q.	

FIG.3.

FIG.4A.	FIG.4B.	FIG.4C.	FIG.4D.
FIG.4E.	FIG.4F.	FIG.4G.	FIG.4H.
FIG.4I.	FIG.4J.	FIG.4K.	FIG.4L.
FIG.4M.	FIG.4N.	FIG.4O.	FIG.4P.

FIG.4.

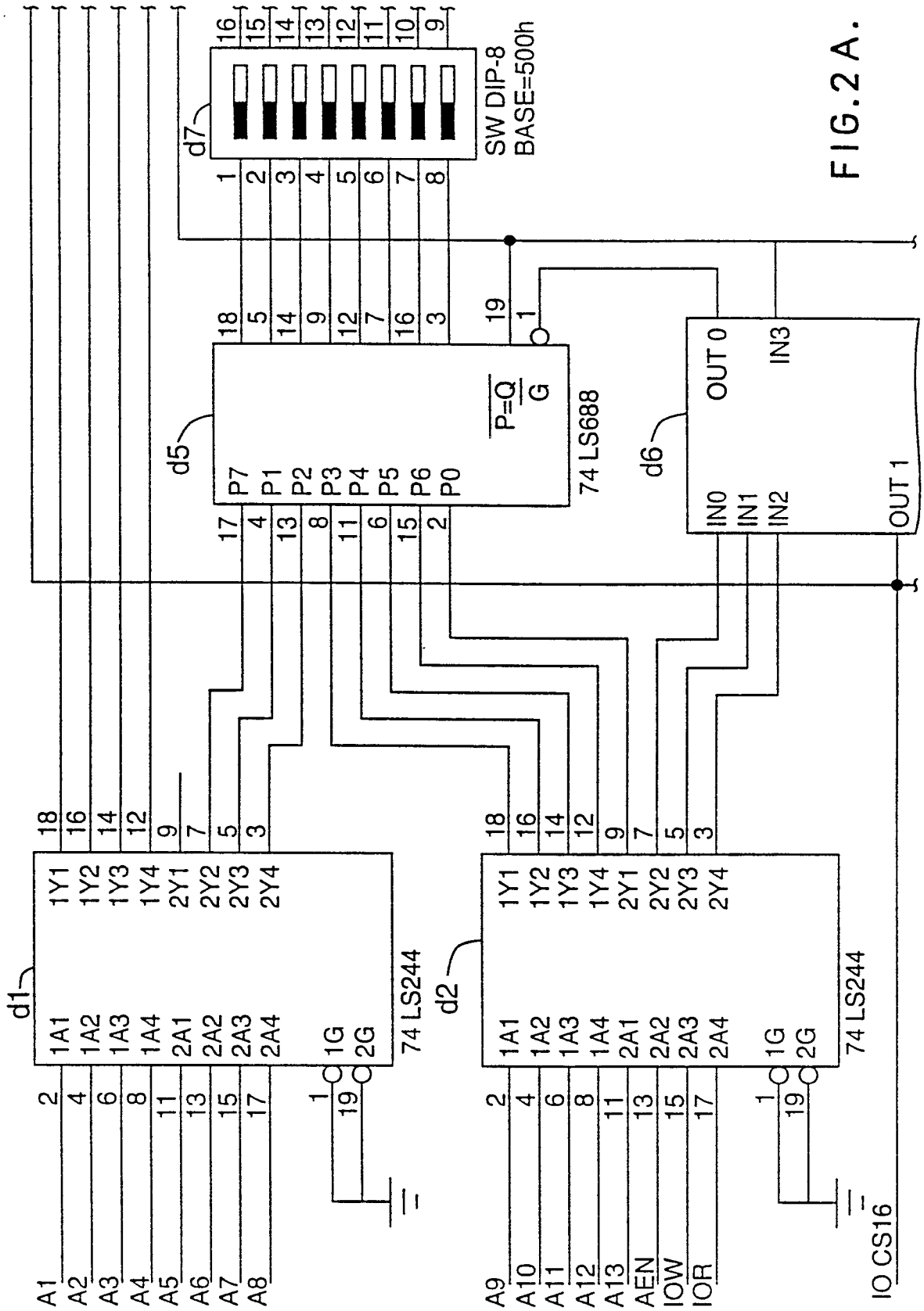
SW DIP-8
BASE=500h
d7
d5
74 LS688
P=Q
G
d6
OUT 0
IN3
OUT 1
IN0
IN1
IN2
d1
d2
74 LS244
1Y1
1Y2
1Y3
1Y4
2Y1
2Y2
2Y3
2Y4
1A1
1A2
1A3
1A4
2A1
2A2
2A3
2A4
1G
2G
A1
A2
A3
A4
A5
A6
A7
A8
A9
A10
A11
A12
A13
AEN
IOW
IOR
IO CS16

FIG.2A.

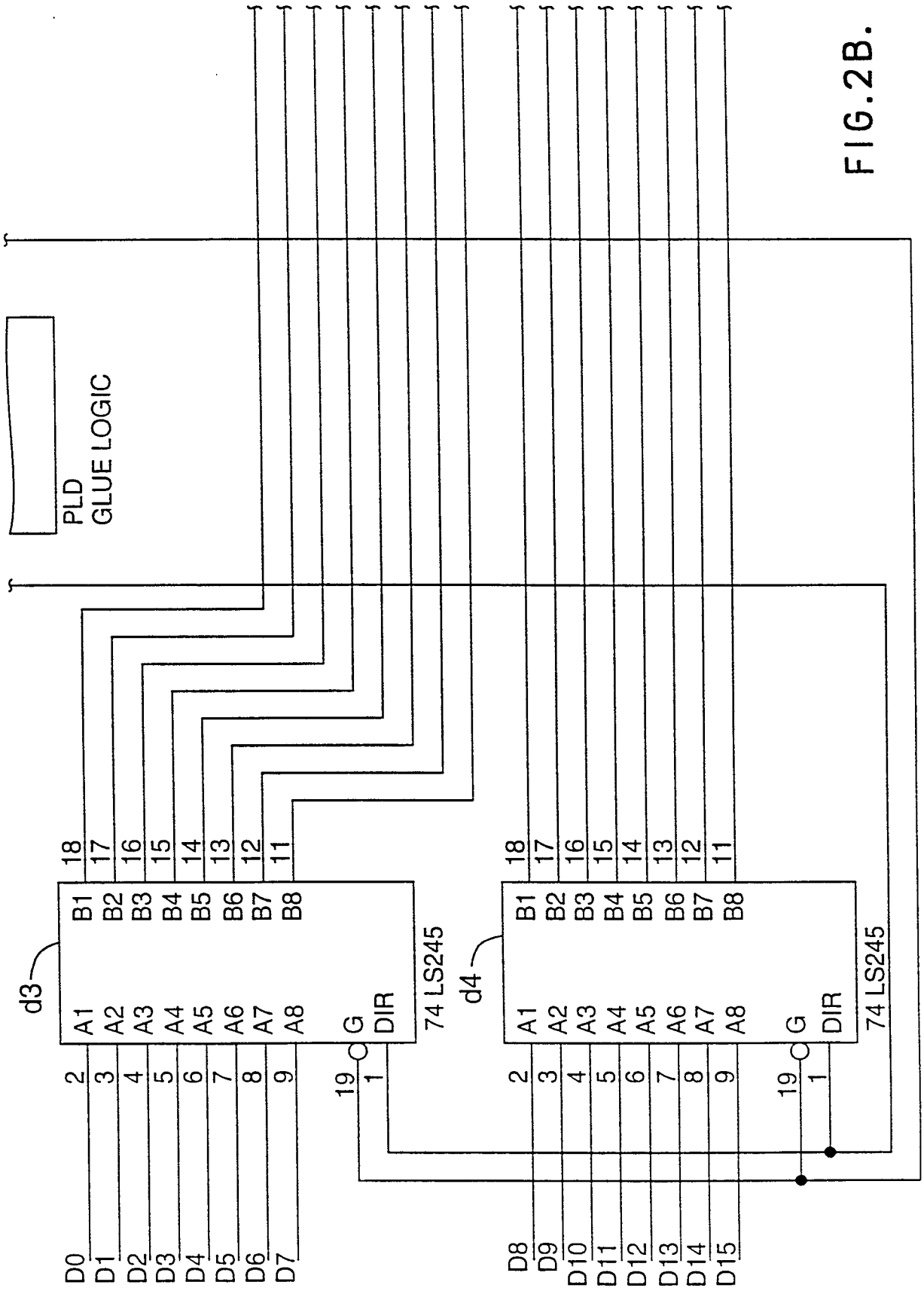
PLD
GLUE LOGIC
d3
d4
74 LS245
74 LS245
A1 A2 A3 A4 A5 A6 A7 A8
B1 B2 B3 B4 B5 B6 B7 B8
G
DIR
D0 D1 D2 D3 D4 D5 D6 D7
D8 D9 D10 D11 D12 D13 D14 D15

FIG.2B.

FIG.2C.

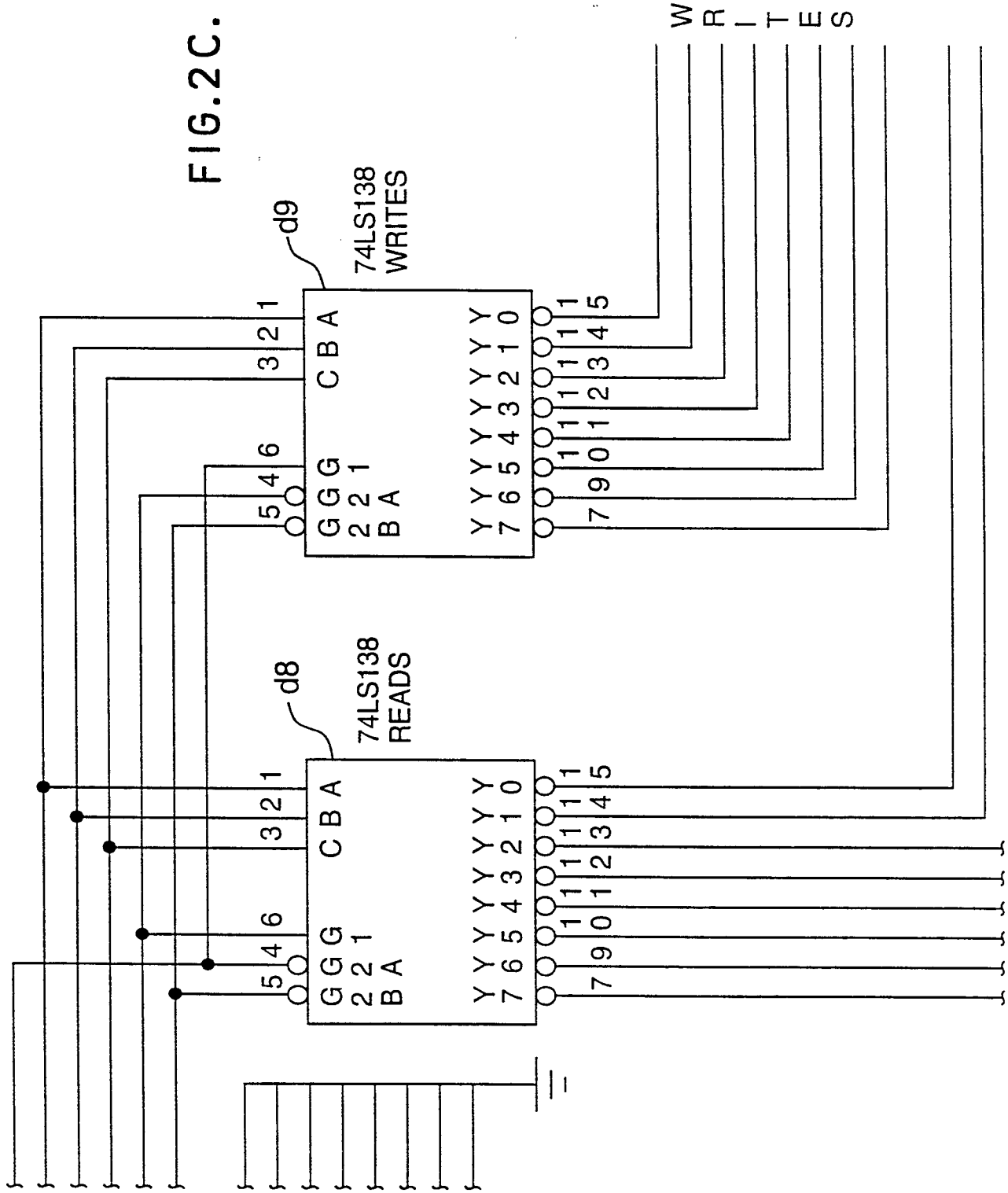
WRITES
74LS138
d9
C B A
G G G
2 2 1
B A
Y Y Y Y Y Y Y Y
7 6 5 4 3 2 1 0
READS
74LS138
d8

6/67

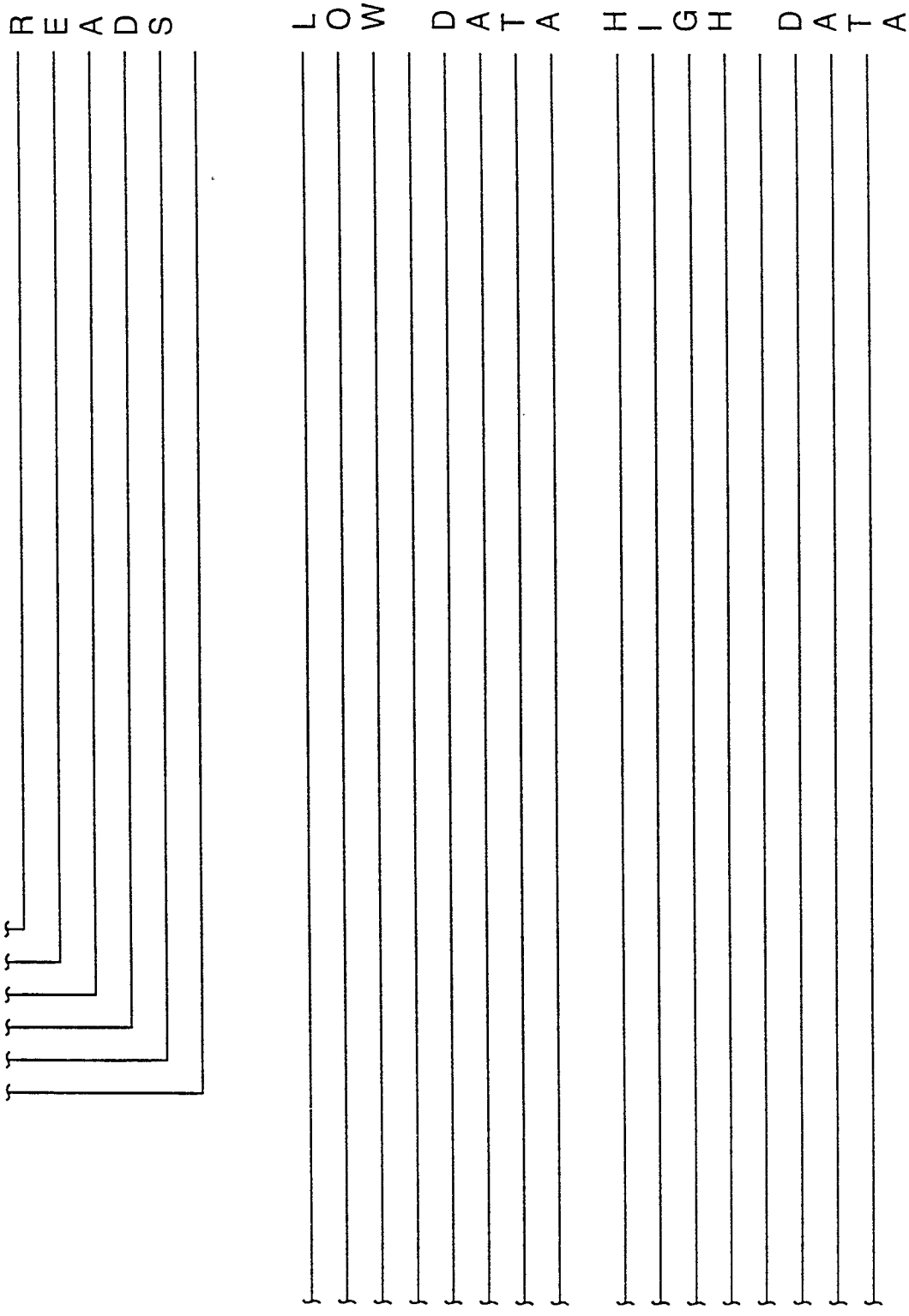

FIG.2D.

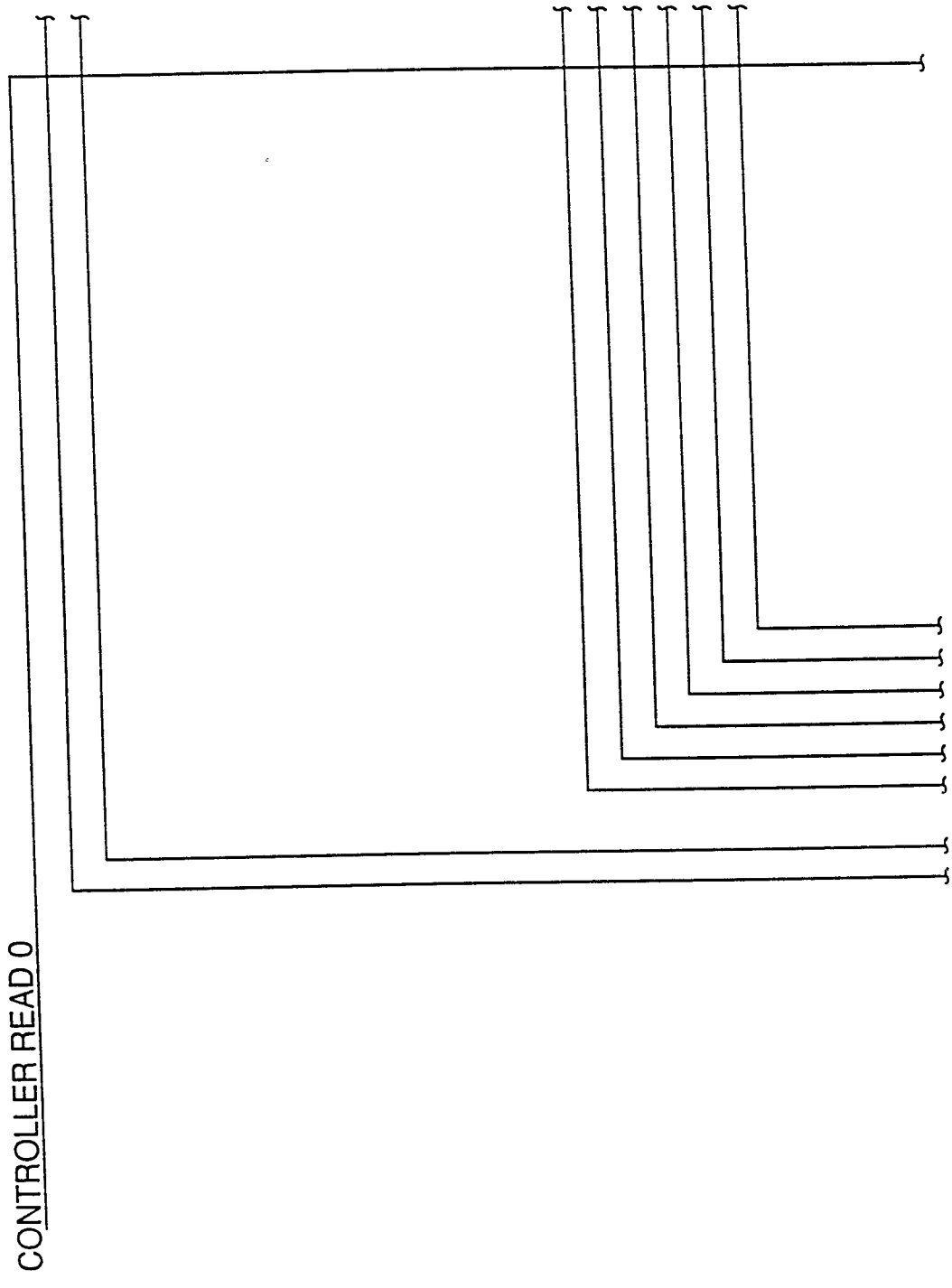

FIG.3A.

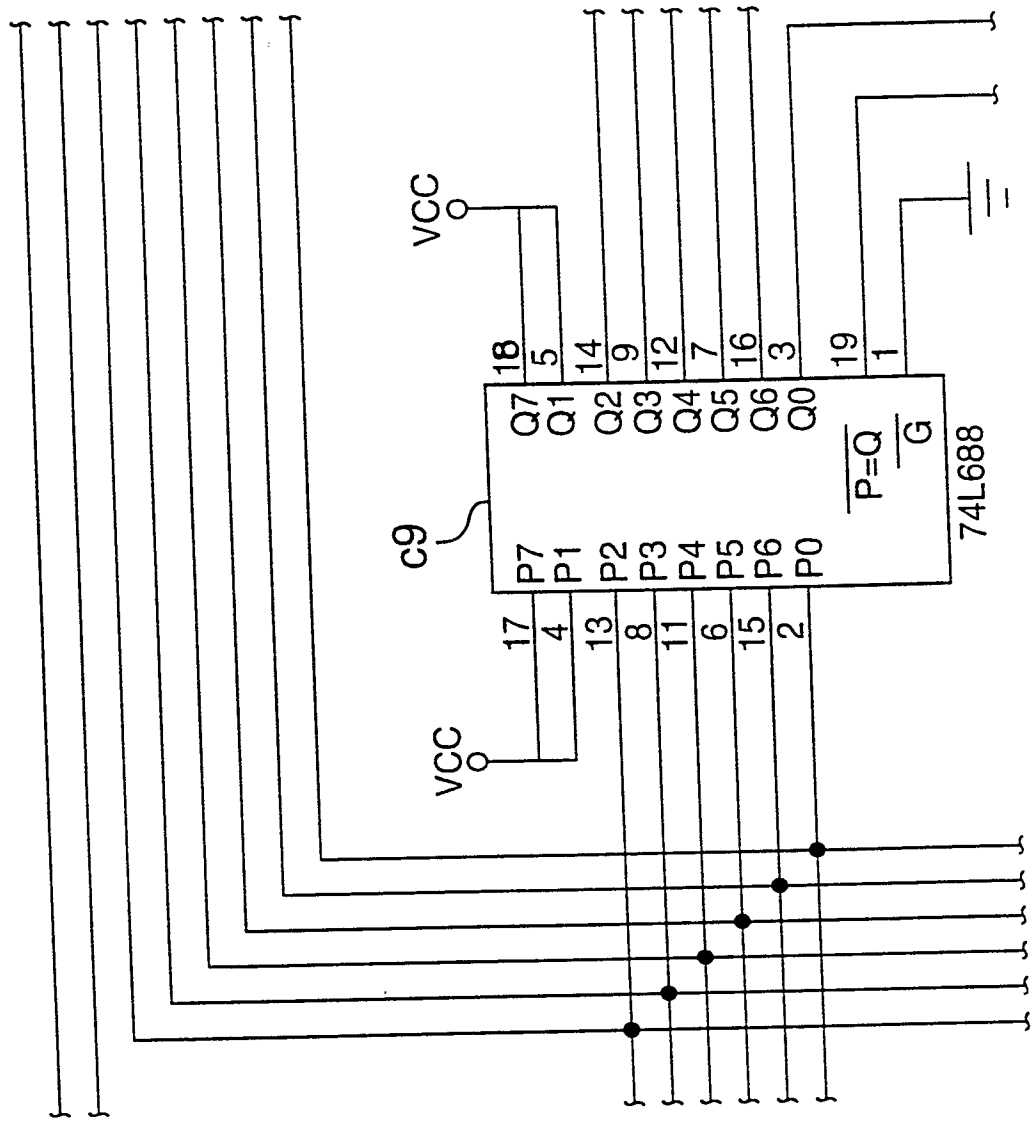
VCC
VCC
C9
74L688
P=Q
G
Q7 Q1 Q2 Q3 Q4 Q5 Q6 Q0
P7 P1 P2 P3 P4 P5 P6 P0
18 5 14 9 12 7 16 3 19 1
17 4 13 8 11 6 15 2

FIG.3B.

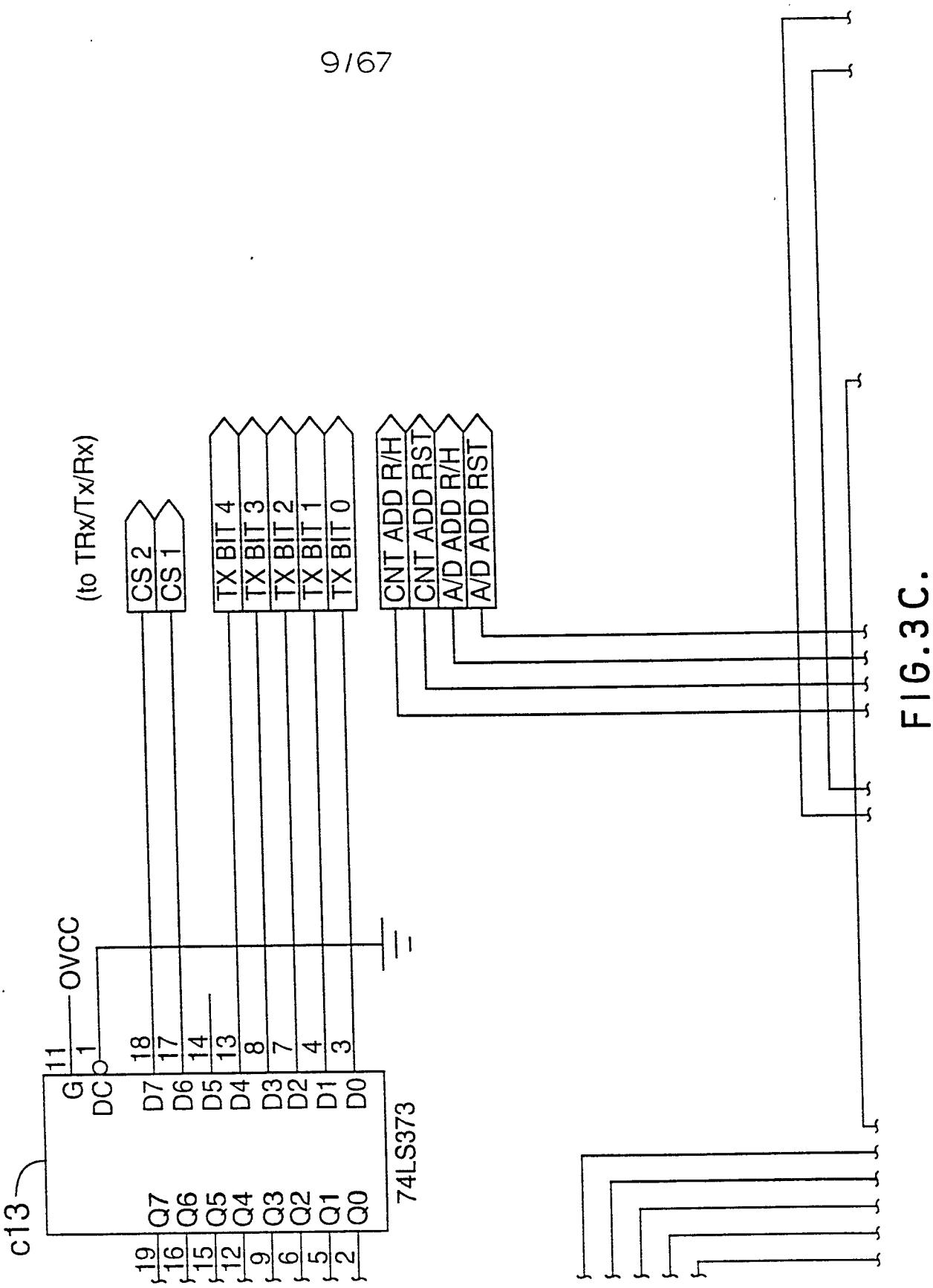
(to TRx/Tx/Rx)
CS 2
CS 1
TX BIT 4
TX BIT 3
TX BIT 2
TX BIT 1
TX BIT 0
CNT ADD R/H
CNT ADD RST
A/D ADD R/H
A/D ADD RST
OVCC
11
1
18
17
14
13
8
7
4
3
G
DC
D7
D6
D5
D4
D3
D2
D1
D0
74LS373
C13
Q7
Q6
Q5
Q4
Q3
Q2
Q1
Q0
19
16
15
12
9
6
5
2

FIG.3C.

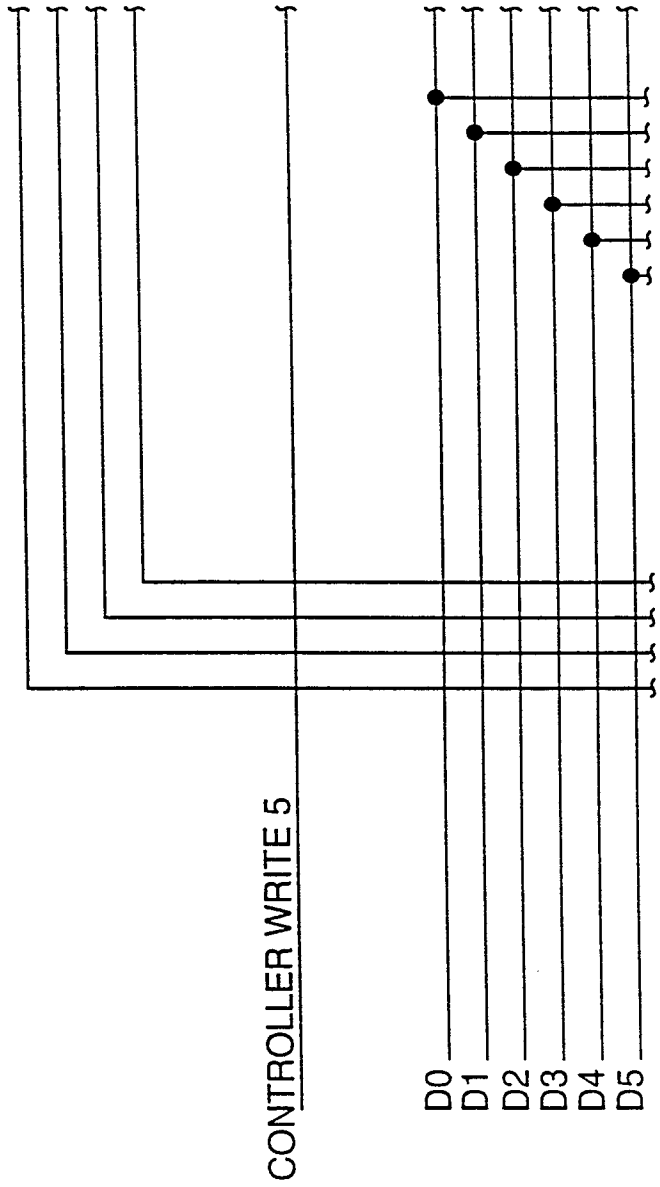

FIG.3D.

11/67

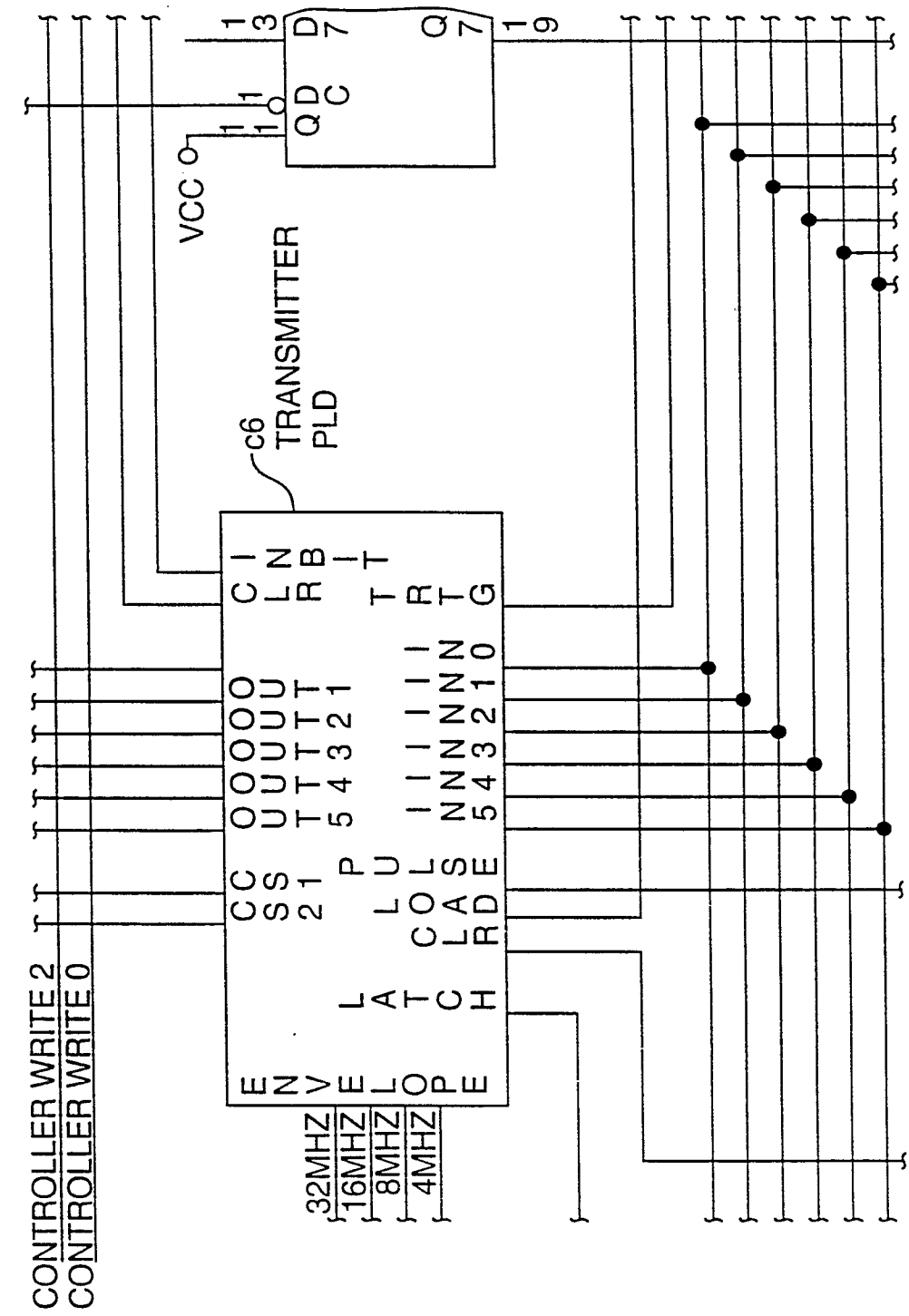
VCC
TRANSMITTER
c6
PLD
CONTROLLER WRITE 2
CONTROLLER WRITE 0
32MHZ
16MHZ
8MHZ
4MHZ

FIG.3E.

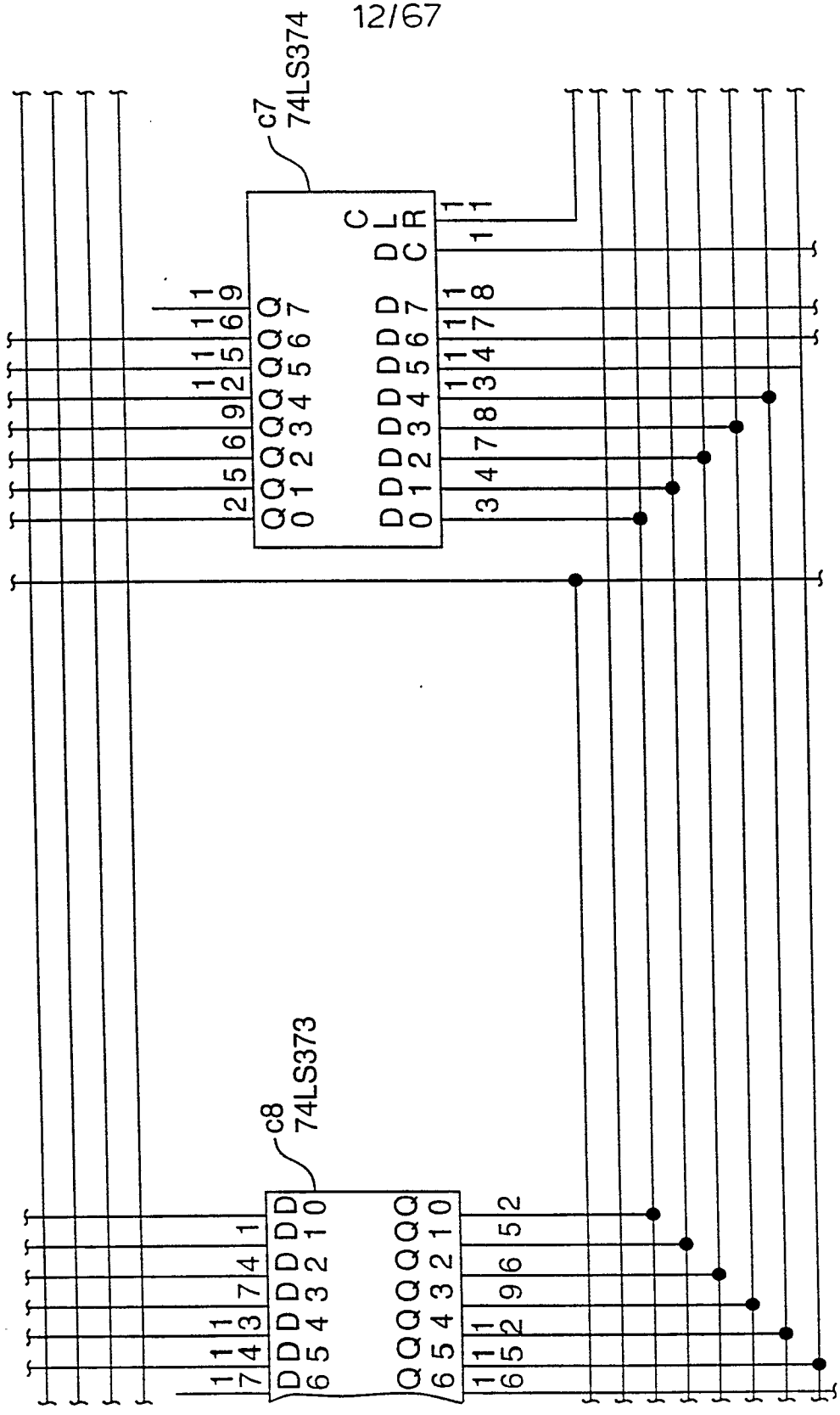
c7
74LS374
C
DL
CR
DDDDDDDD
01234567
QQQQQQQQ
01234567
c8
74LS373
DDDDDDDD
01234567
QQQQQQQQ
01234567

FIG.3F.

FIG.3G.

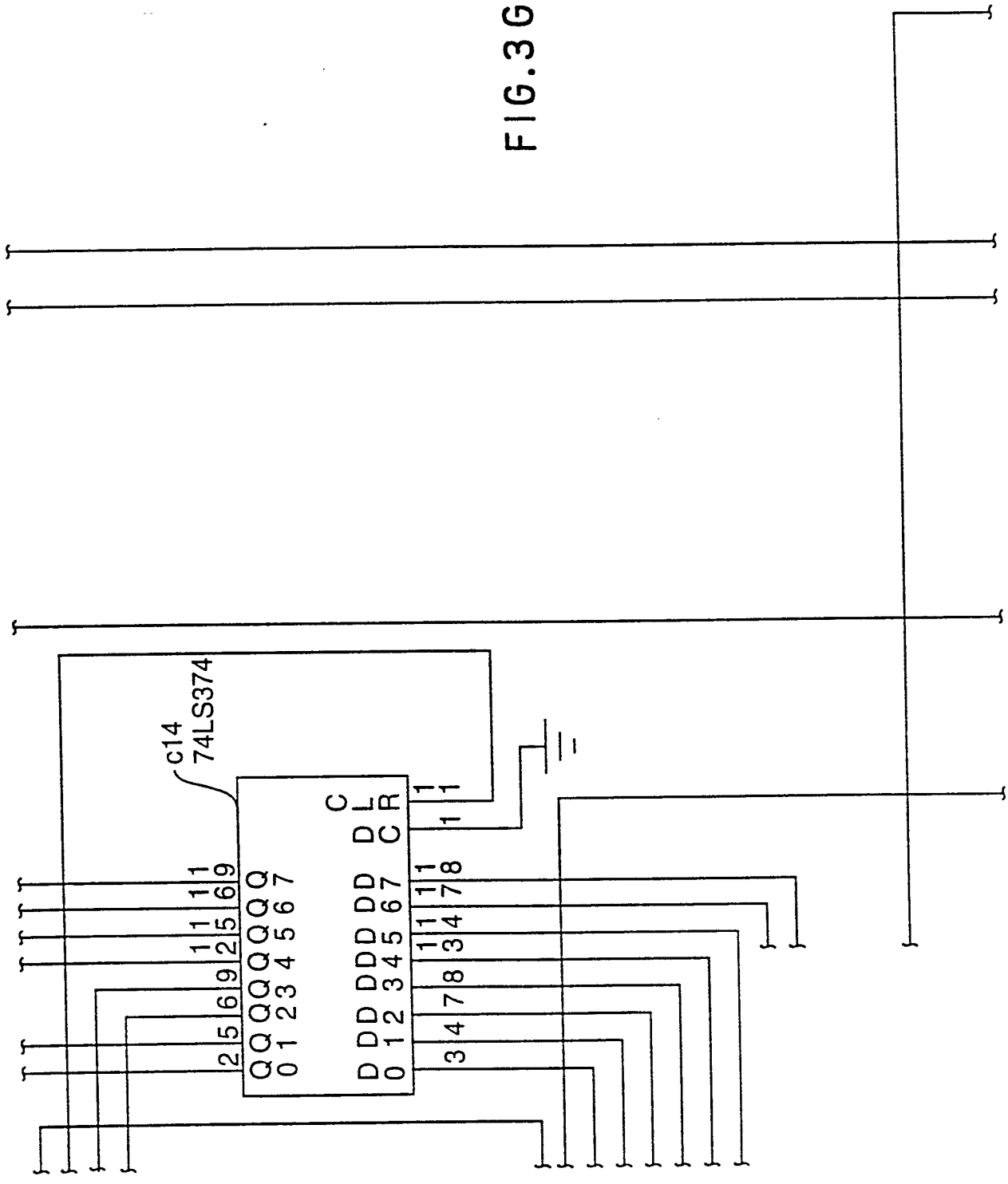

14/67

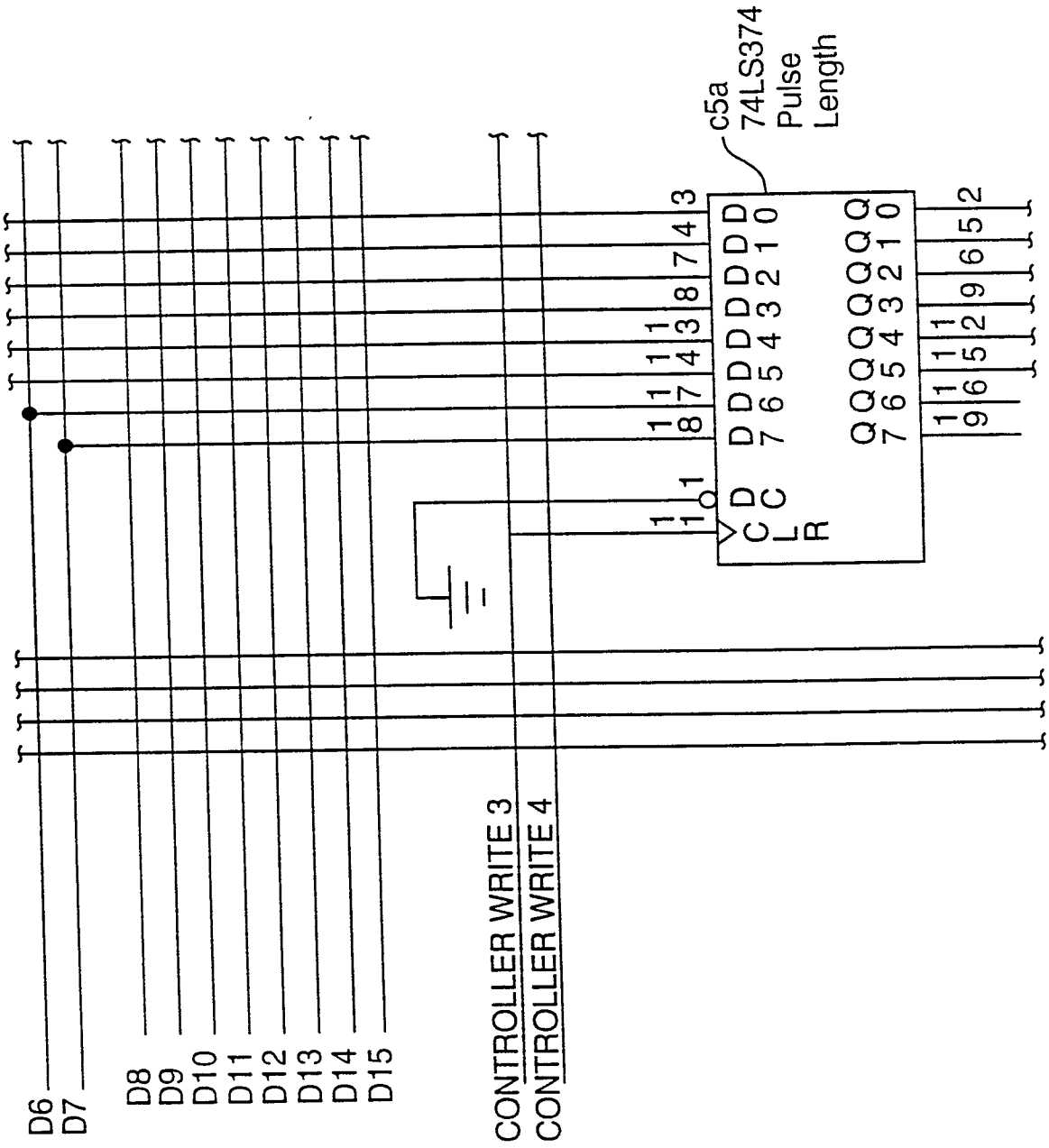
c5a
74LS374
Pulse
Length
D6
D7
D8
D9
D10
D11
D12
D13
D14
D15
CONTROLLER WRITE 3
CONTROLLER WRITE 4

FIG.3H.

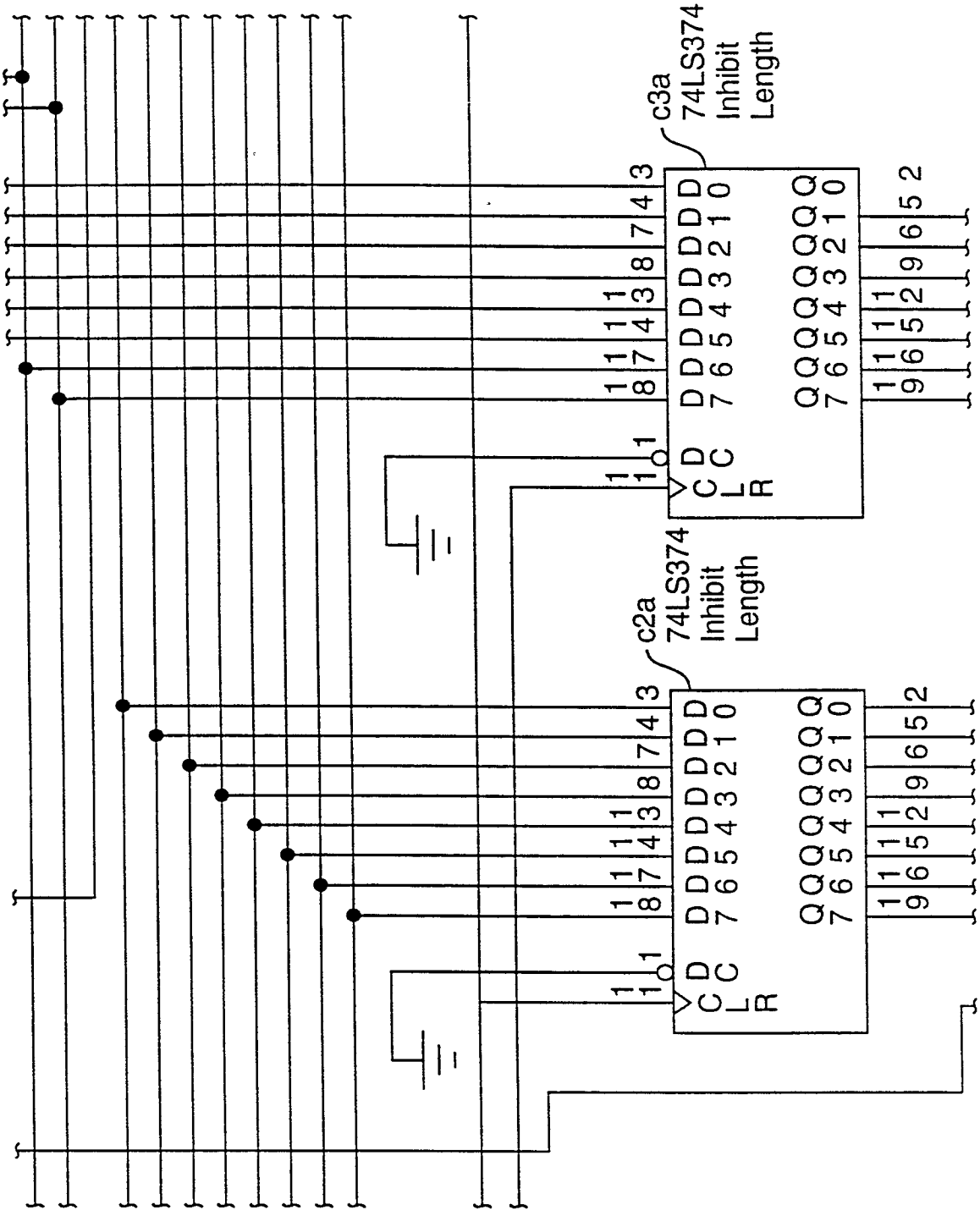

FIG.3I.

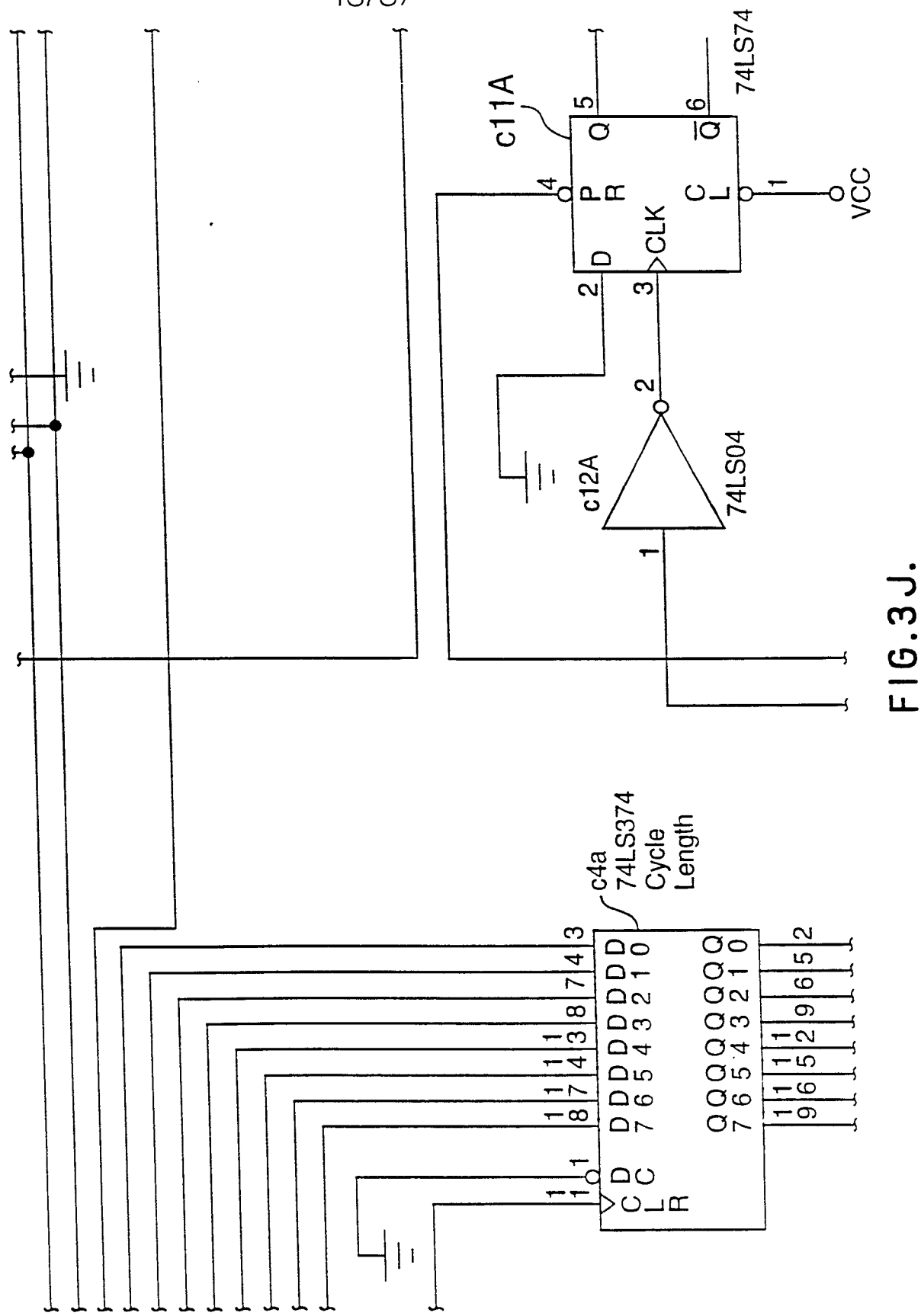
c11A
74LS74
Q
$\overline{Q}$
P
R
C
L
CLK
D
VCC
c12A
74LS04
c4a
74LS374
Cycle
Length
D C L R
D D D D D D D D
Q Q Q Q Q Q Q Q

FIG.3J.

FIG.3K.

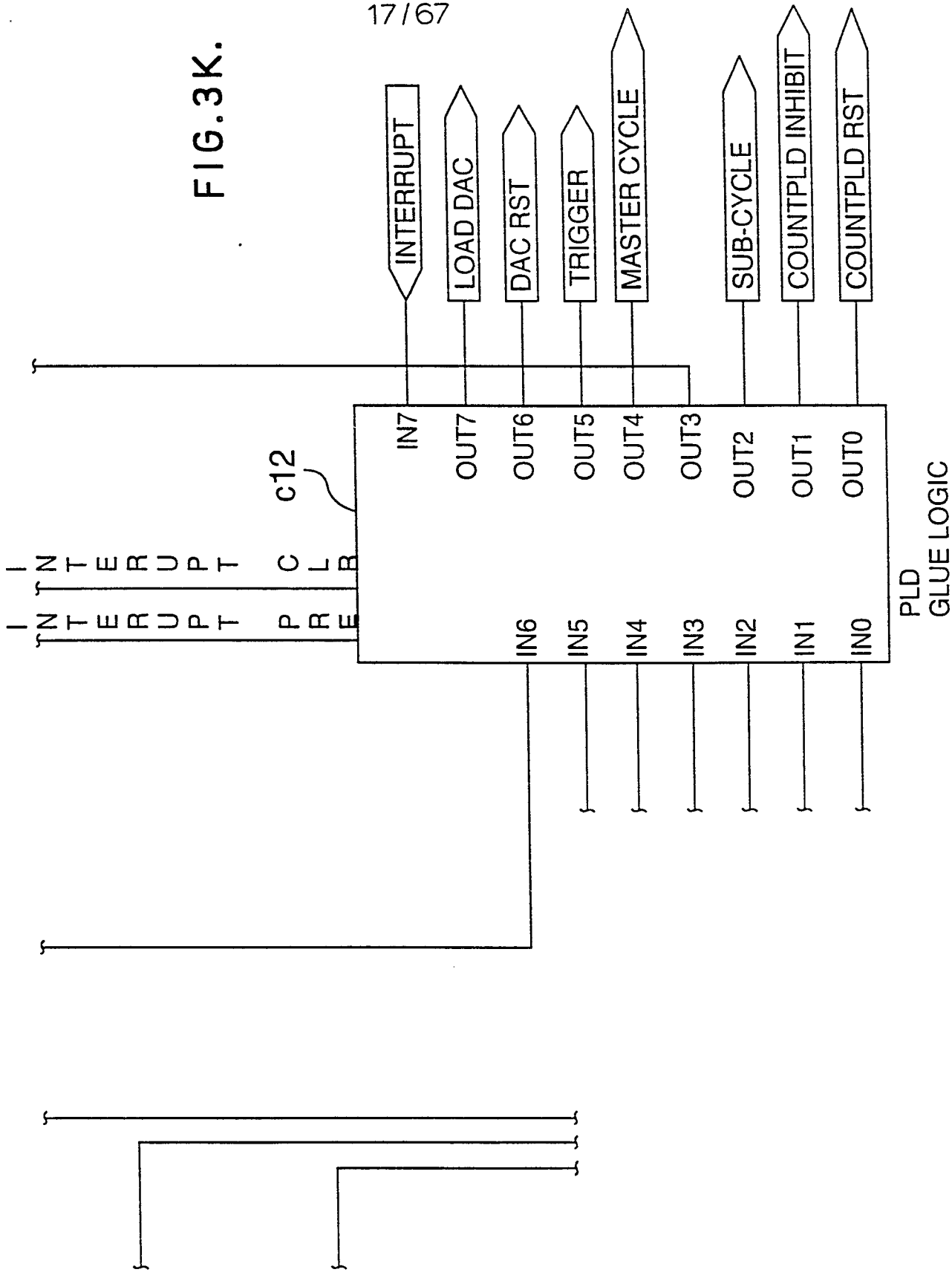
INTERRUPT
LOAD DAC
DAC RST
TRIGGER
MASTER CYCLE
SUB-CYCLE
COUNTPLD INHIBIT
COUNTPLD RST
IN7
OUT7
OUT6
OUT5
OUT4
OUT3
OUT2
OUT1
OUT0
c12
INTERRUPT CLR
INTERRUPT PRE
IN6
IN5
IN4
IN3
IN2
IN1
IN0
PLD
GLUE LOGIC

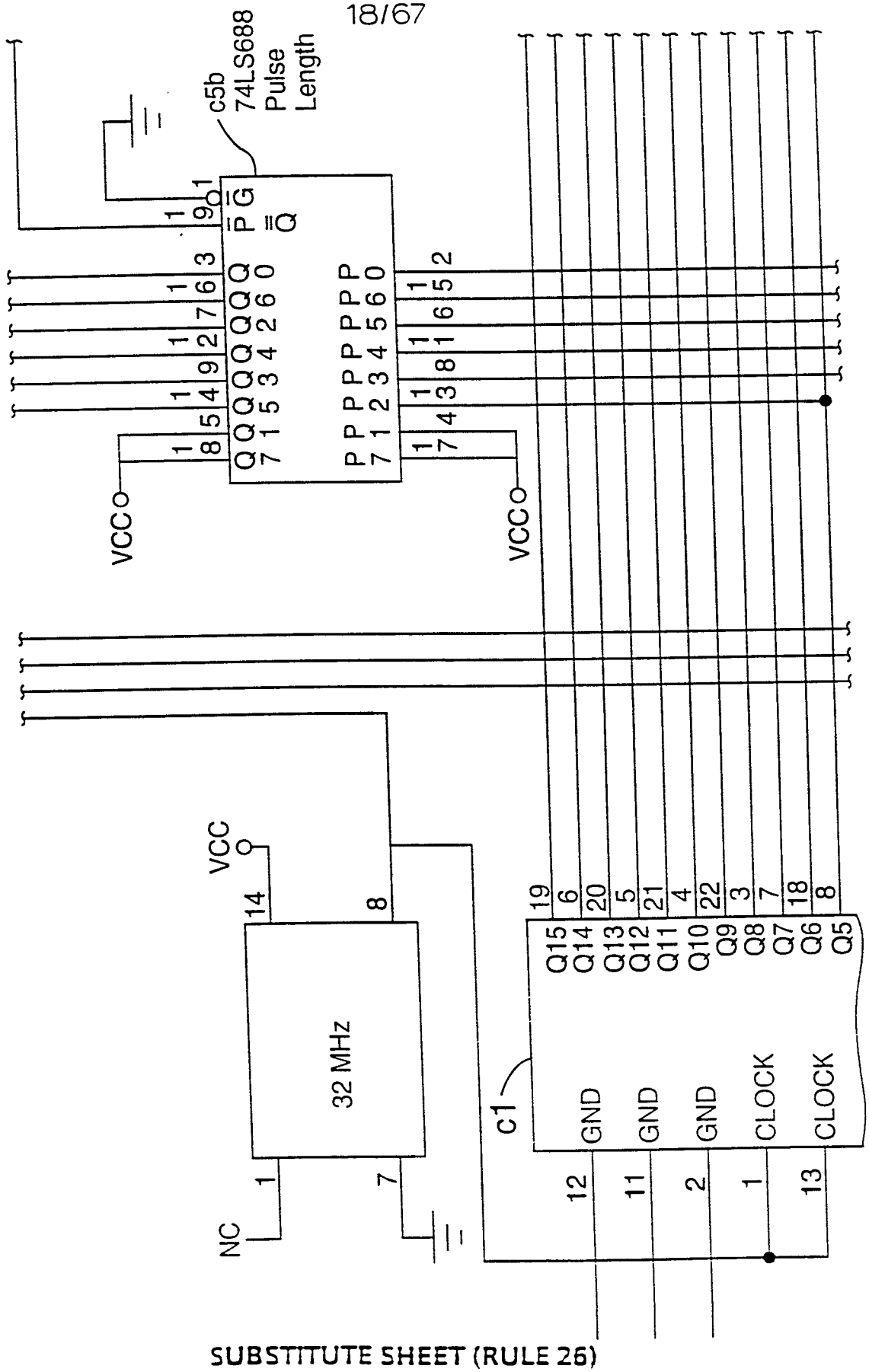
c5b
74LS688
Pulse
Length
VCC
VCC
32 MHz
NC
c1
GND
GND
GND
CLOCK
CLOCK

FIG.3L.

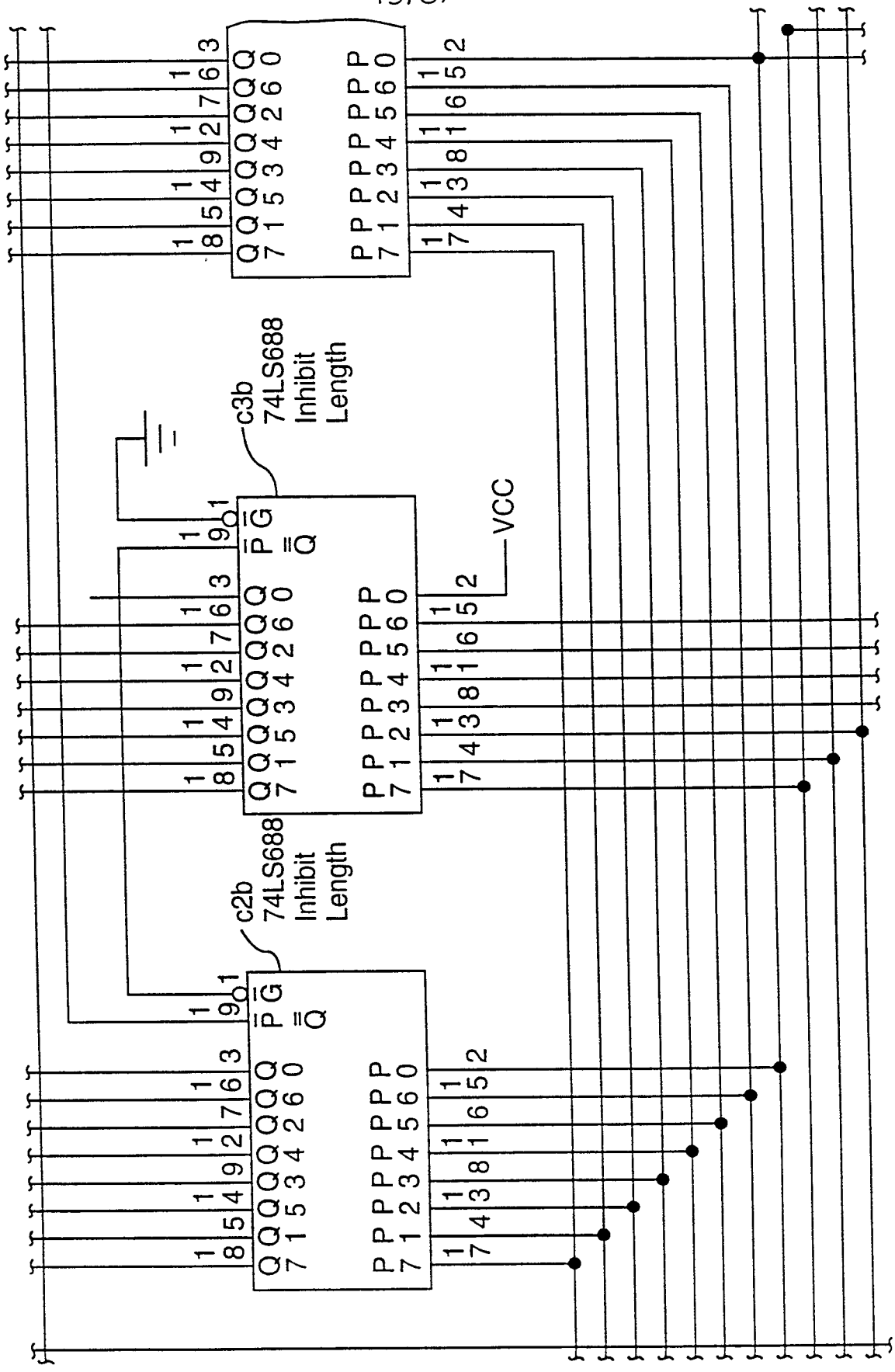

FIG.3M.

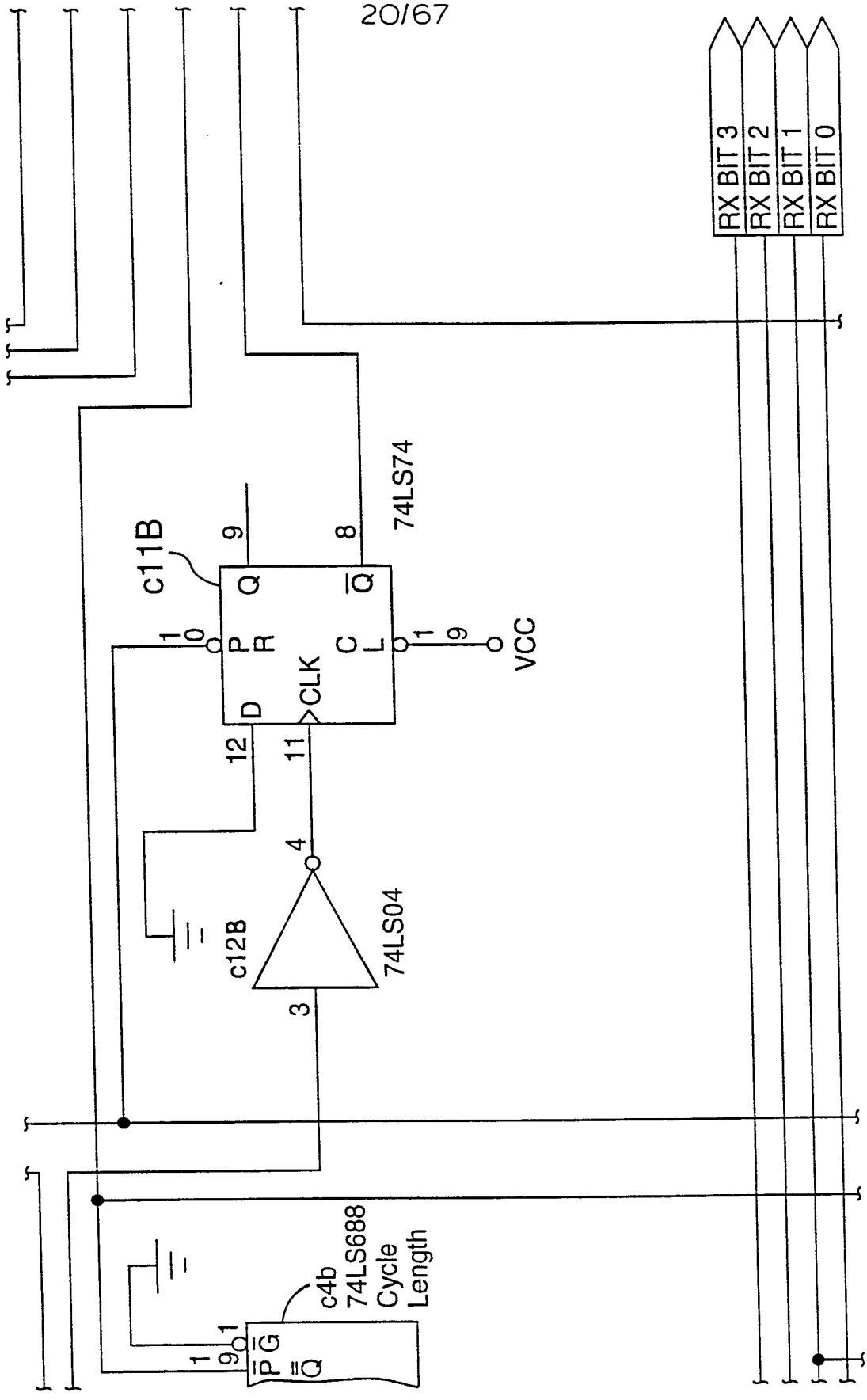
RX BIT 3
RX BIT 2
RX BIT 1
RX BIT 0
c11B
74LS74
Q
$\overline{Q}$
P
R
C
L
CLK
D
VCC
c12B
74LS04
c4b
74LS688
Cycle
Length
$\overline{P}\overline{G}$
$\equiv Q$

FIG.3N.

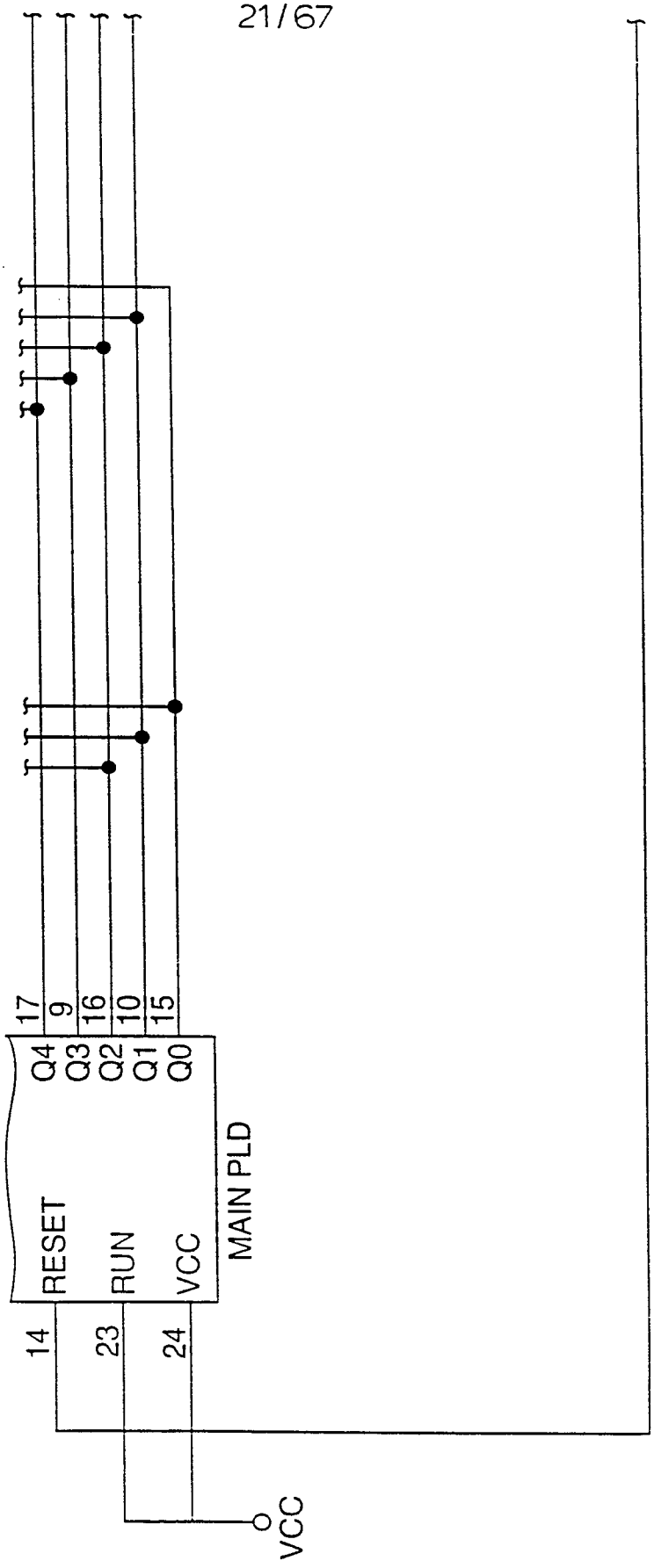

FIG.30.

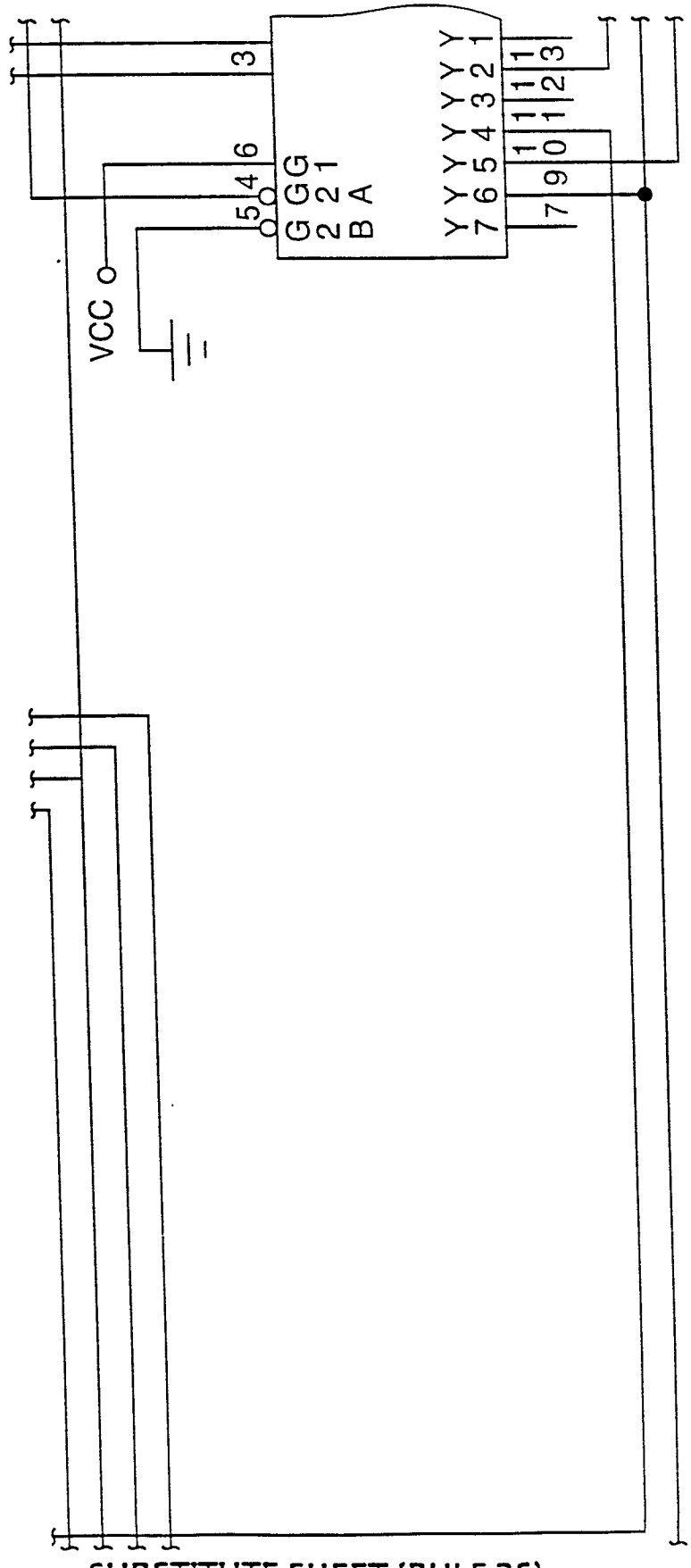

FIG.3P.

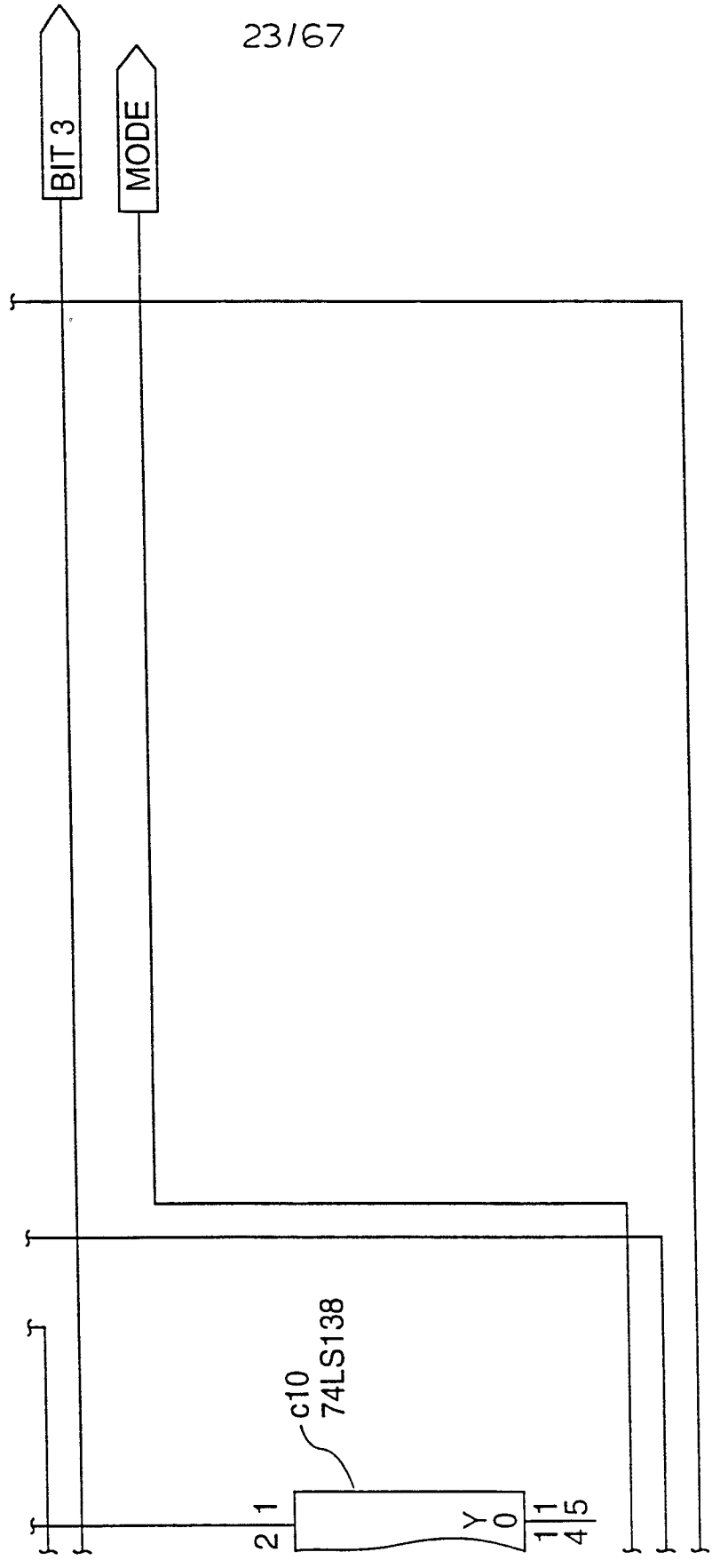

FIG.3Q.

FIG.4A.

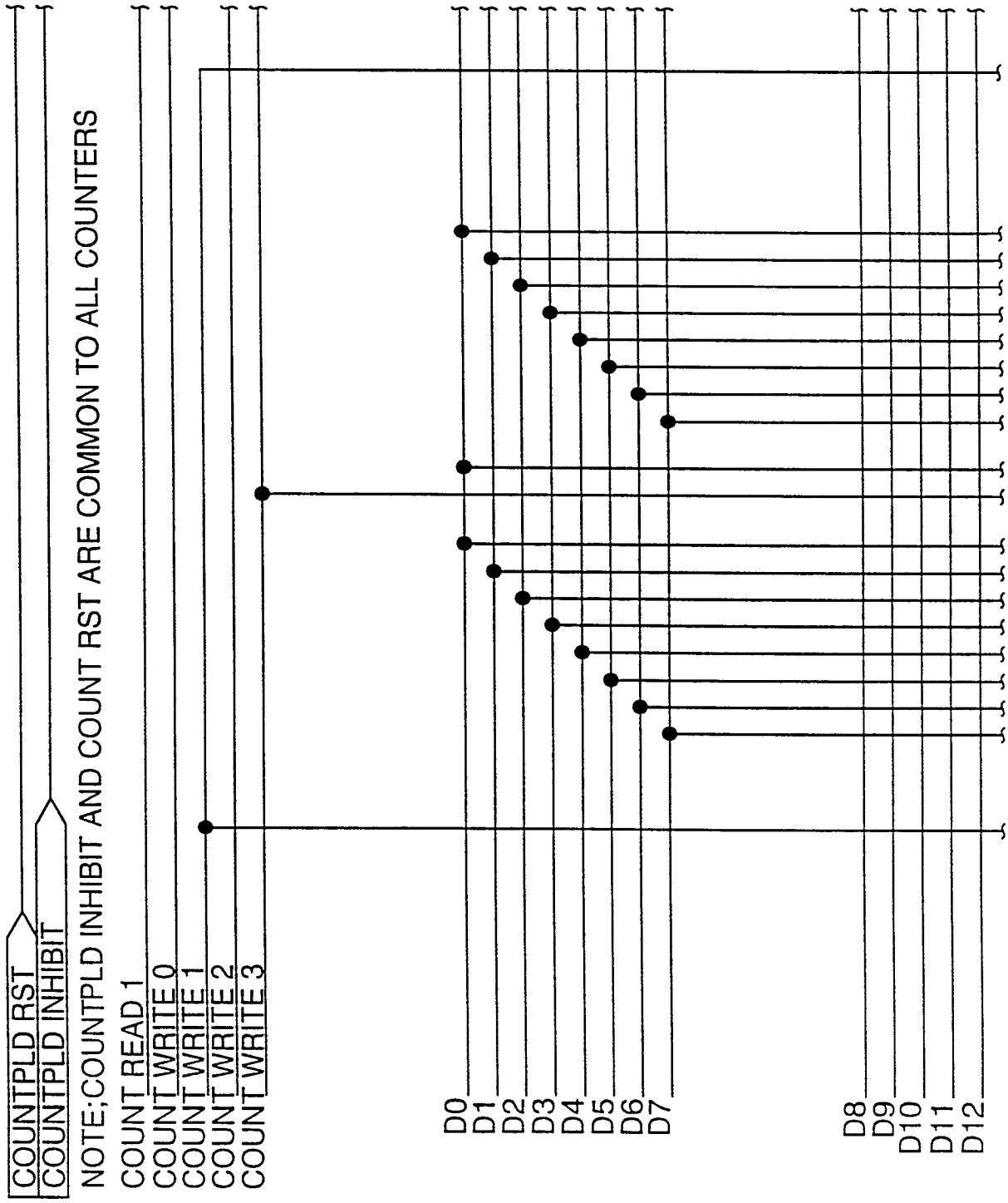
COUNTPLD RST
COUNTPLD INHIBIT
NOTE;COUNTPLD INHIBIT AND COUNT RST ARE COMMON TO ALL COUNTERS
COUNT READ 1
COUNT WRITE 0
COUNT WRITE 1
COUNT WRITE 2
COUNT WRITE 3
D0
D1
D2
D3
D4
D5
D6
D7
D8
D9
D10
D11
D12

FIG.4B.

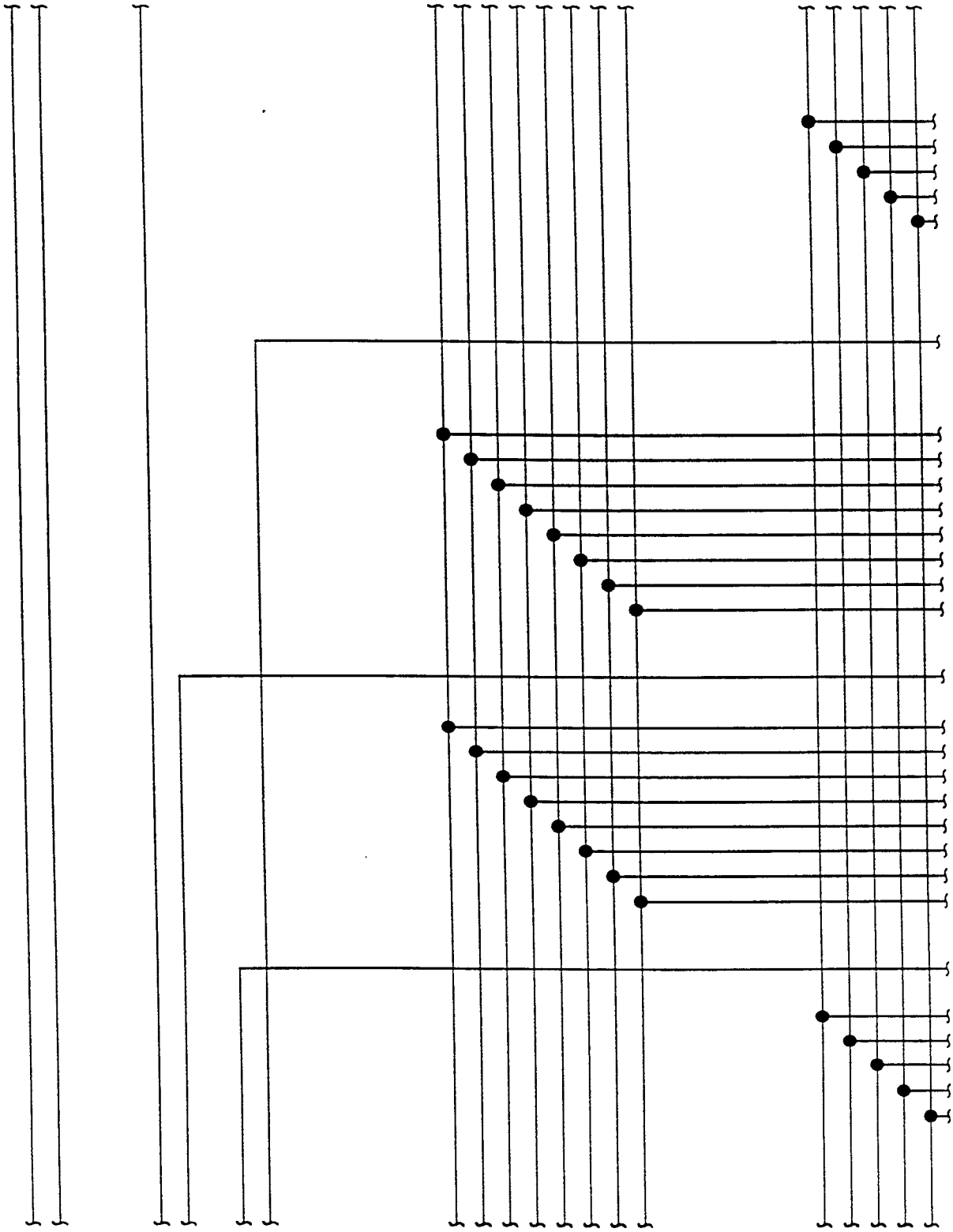

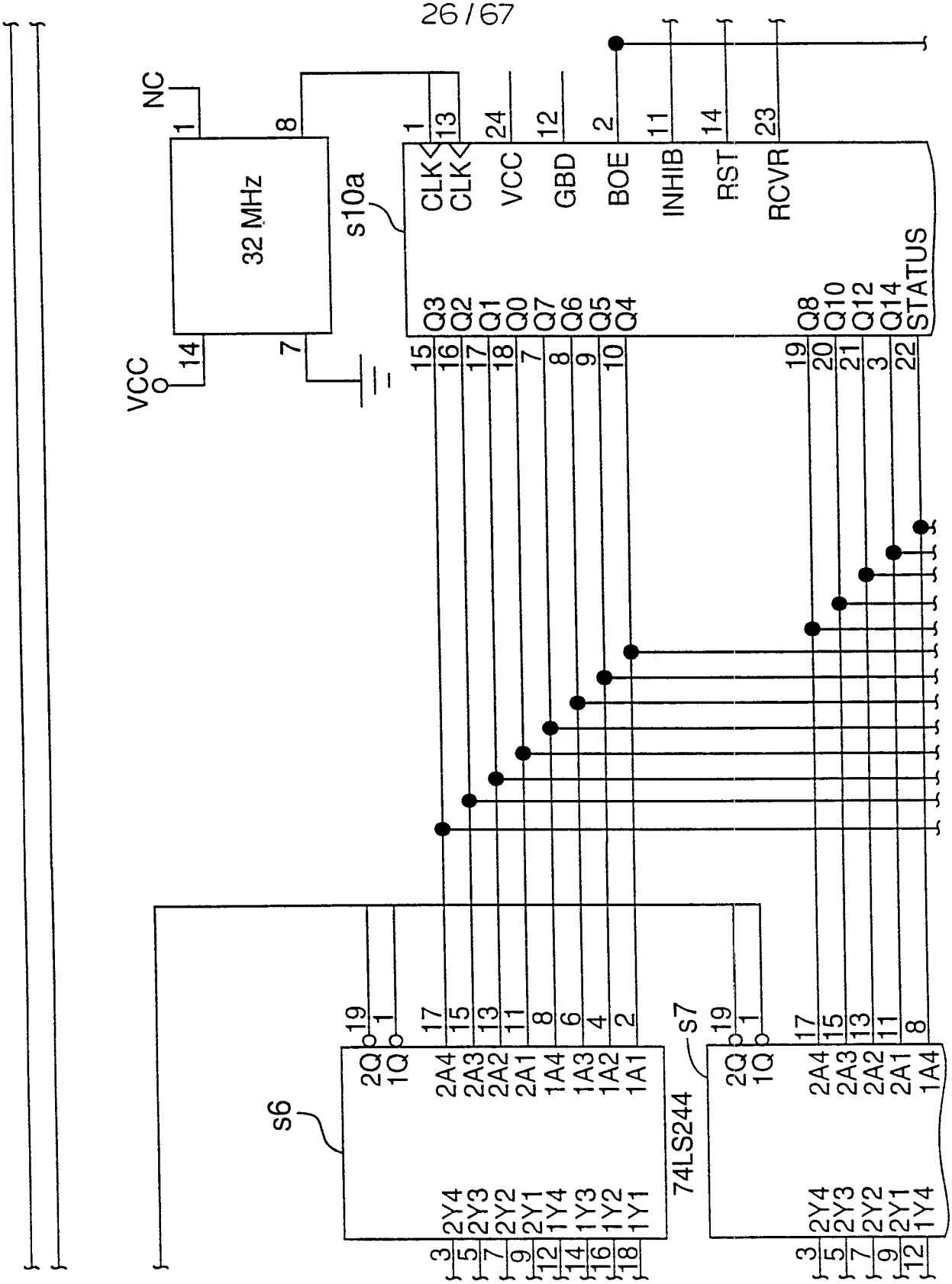
NC
32 MHz
s10a
CLK
CLK
VCC
GBD
BOE
INHIB
RST
RCVR
STATUS
Q3 Q2 Q1 Q0 Q7 Q6 Q5 Q4
Q8 Q10 Q12 Q14
VCC
s6
s7
74LS244
2Q 1Q
2A4 2A3 2A2 2A1 1A4 1A3 1A2 1A1
2Y4 2Y3 2Y2 2Y1 1Y4 1Y3 1Y2 1Y1

FIG.4C.

FIG.4D.

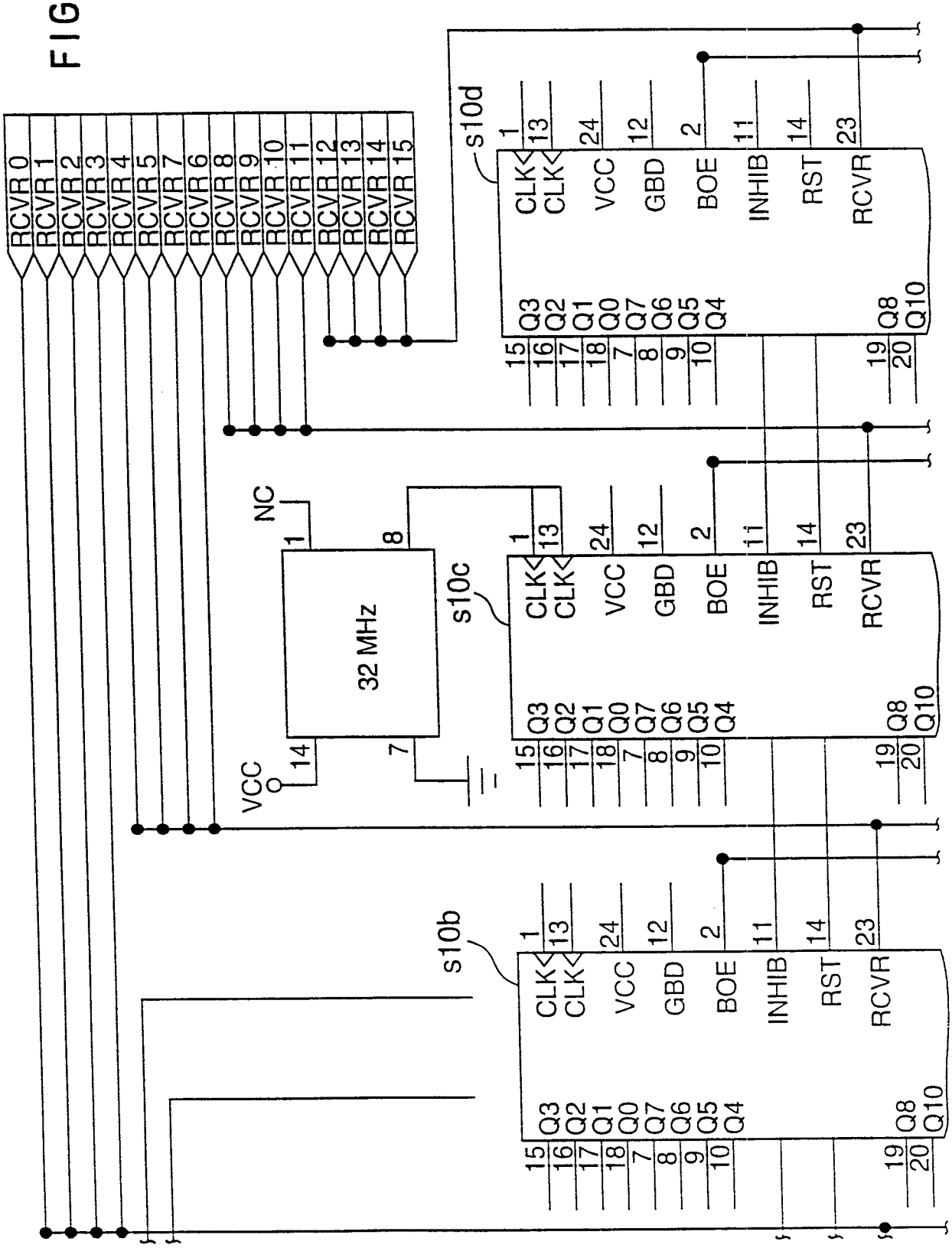
RCVR 0
RCVR 1
RCVR 2
RCVR 3
RCVR 4
RCVR 5
RCVR 7
RCVR 6
RCVR 8
RCVR 9
RCVR 10
RCVR 11
RCVR 12
RCVR 13
RCVR 14
RCVR 15
s10d
s10c
s10b
NC
32 MHz
VCC
CLK
CLK
VCC
GBD
BOE
INHIB
RST
RCVR
Q3
Q2
Q1
Q0
Q7
Q6
Q5
Q4
Q8
Q10

FIG.4E.

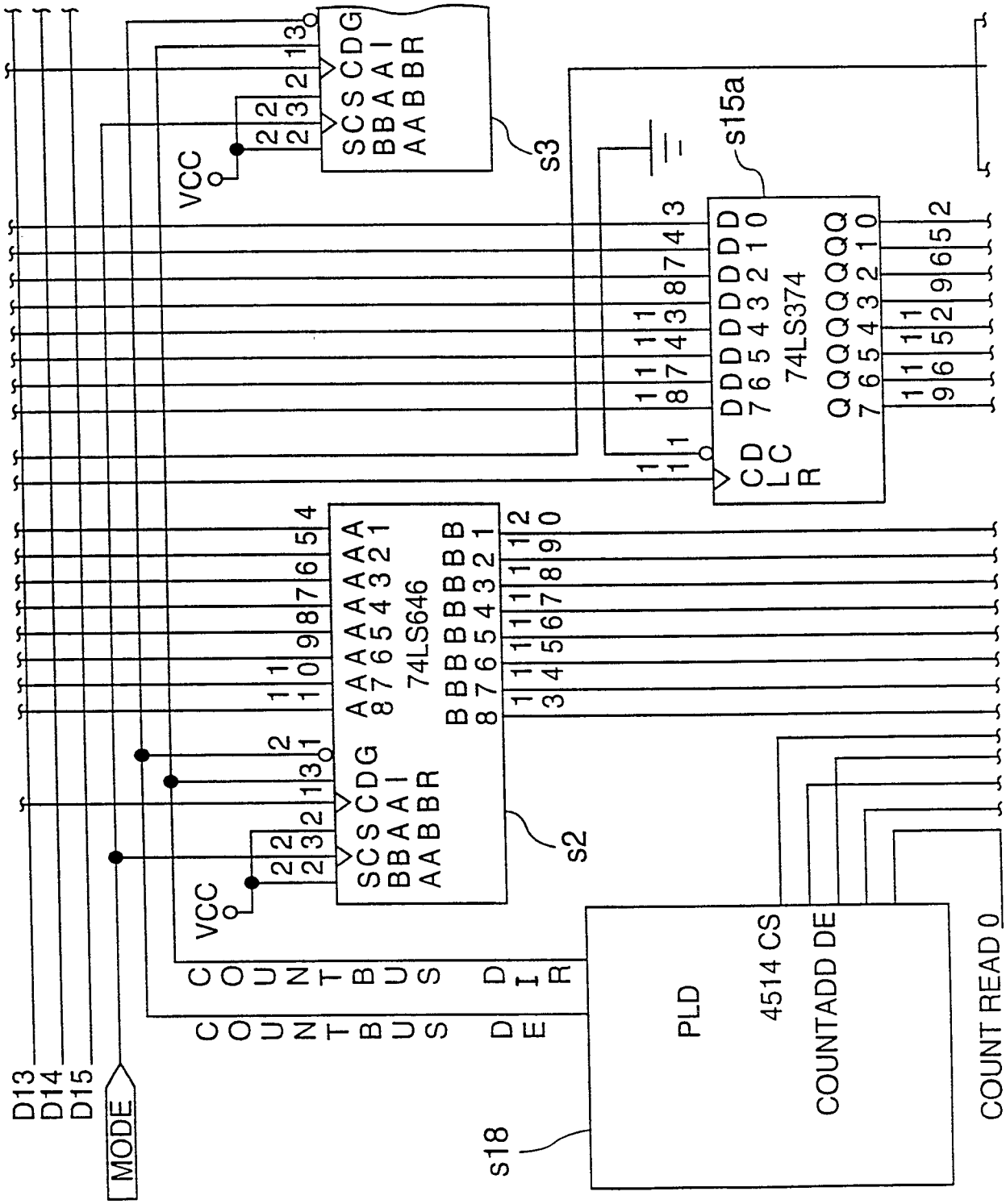
D13
D14
D15
MODE
VCC
VCC
s3
s15a
s2
s18
74LS374
74LS646
PLD
4514 CS
COUNTADD DE
COUNT READ 0
COUNTBUS DIR
COUNTBUS DE

FIG.4F

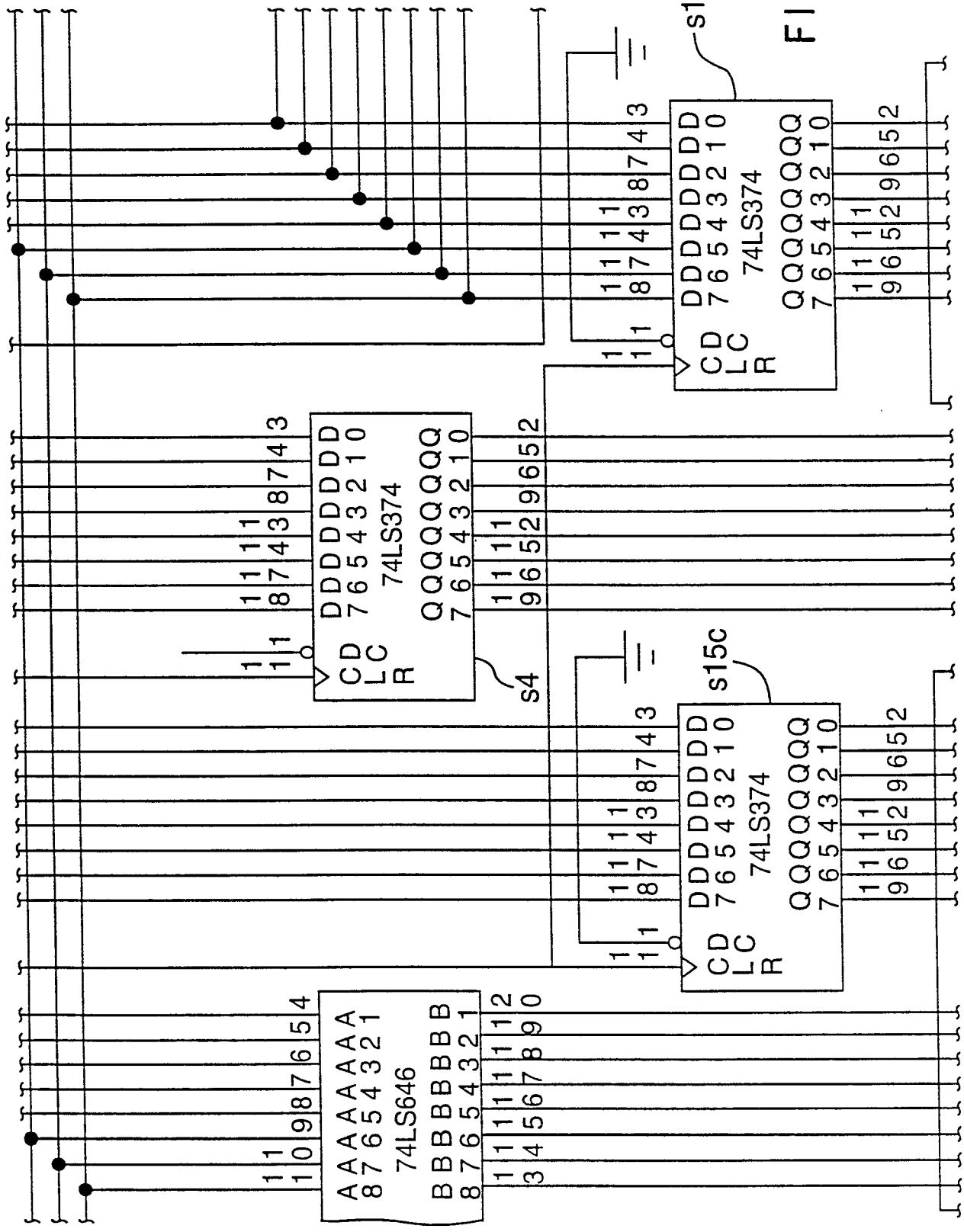
s15e
74LS374
DDDDDDDD 7 6 5 4 3 2 1 0
QQQQQQQQ 7 6 5 4 3 2 1 0
CD
LC
R
s4
s15c
74LS646
AAAAAAAA 8 7 6 5 4 3 2 1
BBBBBBBB 8 7 6 5 4 3 2 1

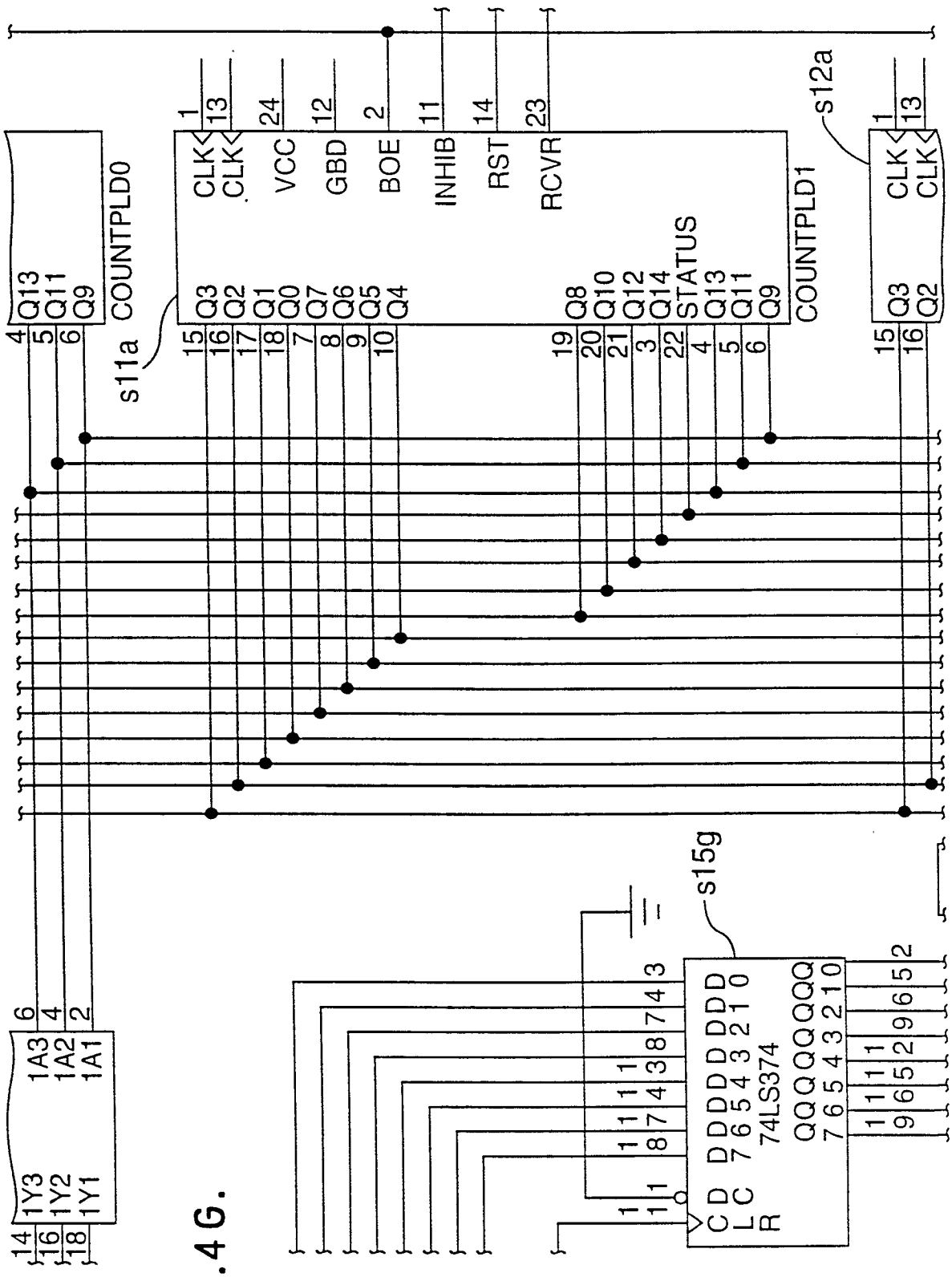
COUNTPLD0
Q13
Q11
Q9
s11a
CLK
CLK
VCC
GBD
BOE
INHIB
RST
RCVR
COUNTPLD1
Q3
Q2
Q1
Q0
Q7
Q6
Q5
Q4
Q8
Q10
Q12
Q14
STATUS
Q13
Q11
Q9
s12a
1A3
1A2
1A1
1Y3
1Y2
1Y1
s15g
74LS374
CD
LC
R

FIG.4G.

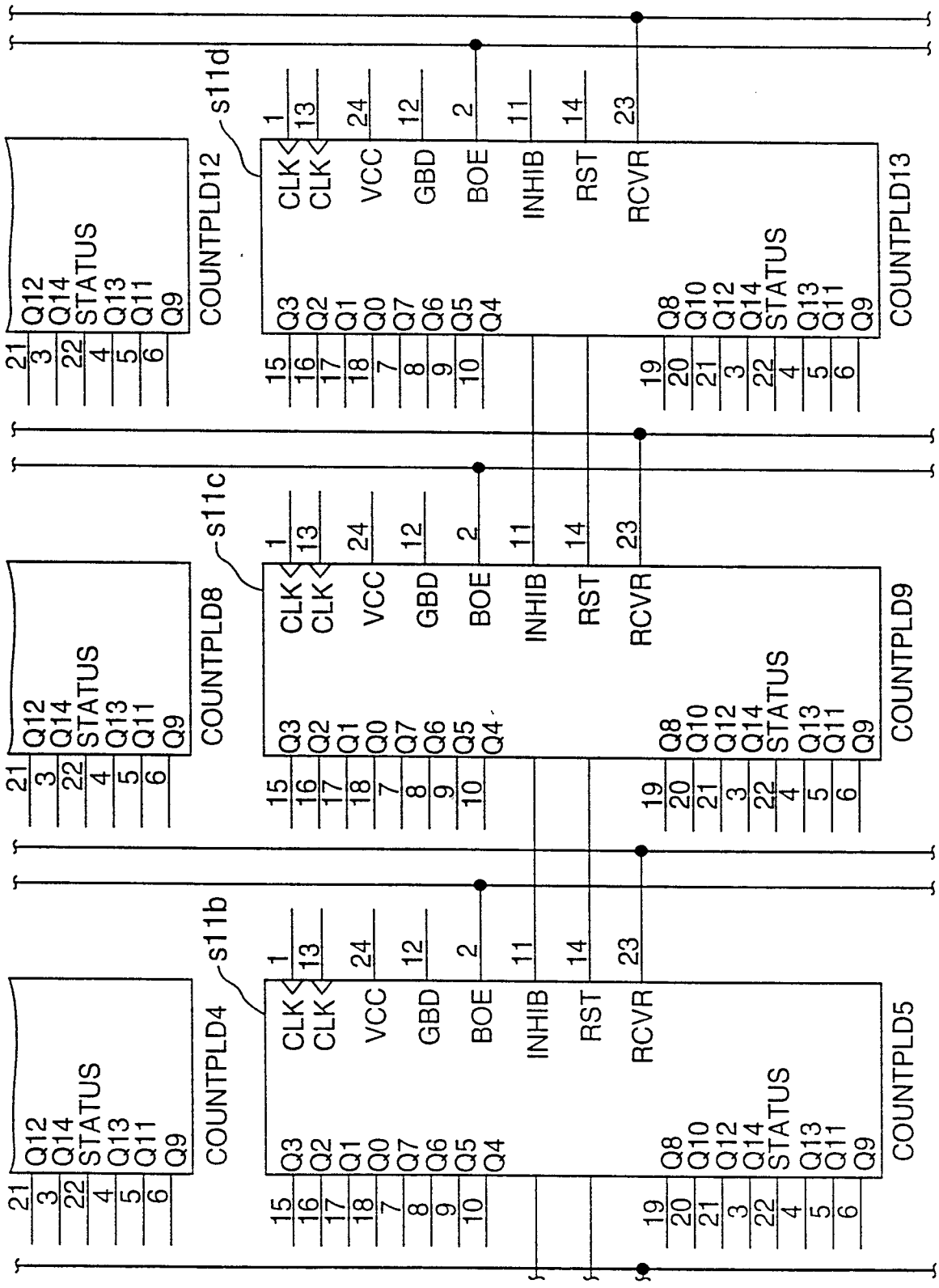
s11d
COUNTPLD12
COUNTPLD13
s11c
COUNTPLD8
COUNTPLD9
s11b
COUNTPLD4
COUNTPLD5
CLK
VCC
GBD
BOE
INHIB
RST
RCVR
STATUS
Q0
Q1
Q2
Q3
Q4
Q5
Q6
Q7
Q8
Q9
Q10
Q11
Q12
Q13
Q14

FIG.4H.

FIG.4I.

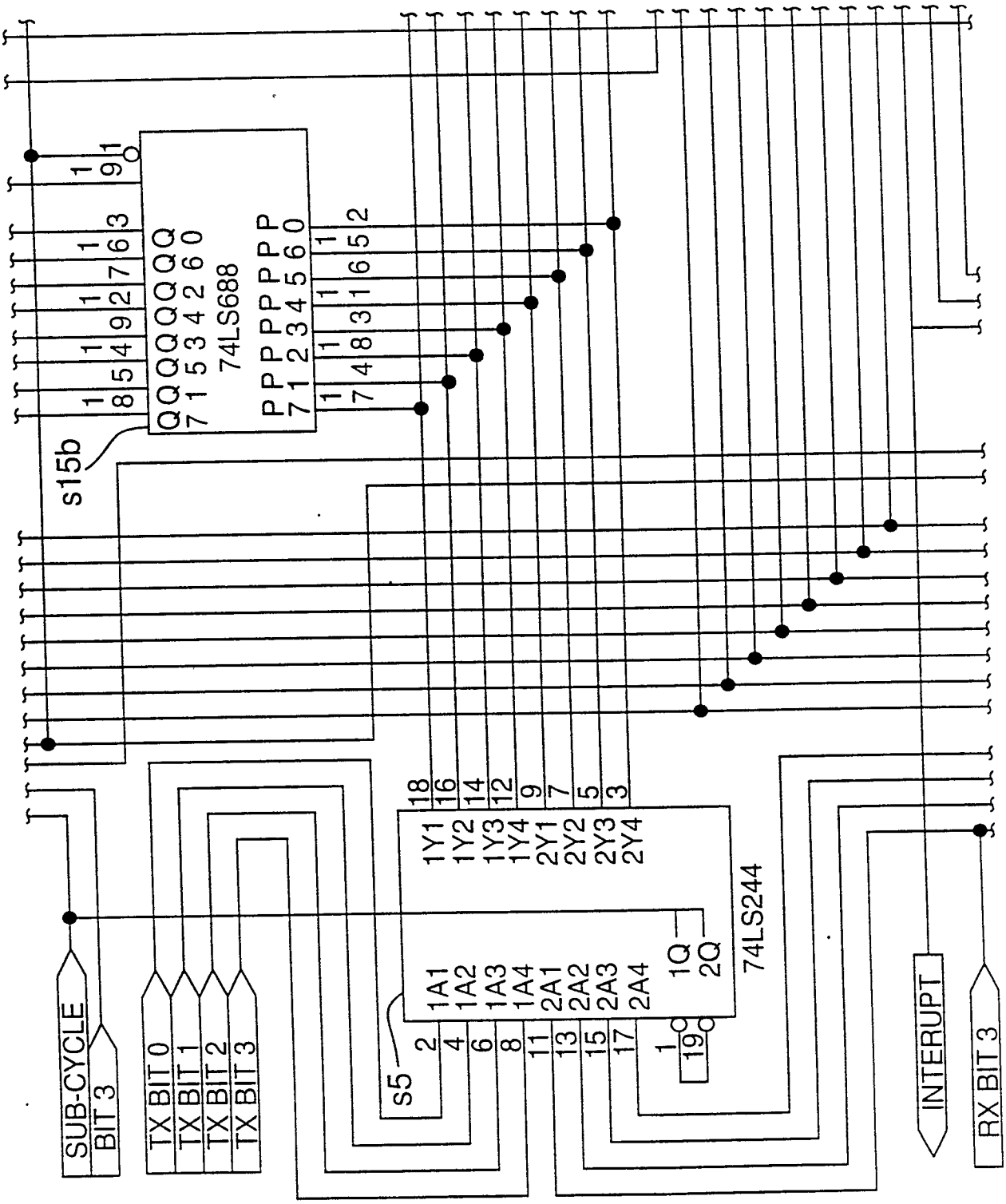
74LS688
Q0 Q1 Q2 Q3 Q4 Q5 Q6 Q7
P0 P1 P2 P3 P4 P5 P6 P7
s15b
74LS244
1A1 1A2 1A3 1A4 2A1 2A2 2A3 2A4
1Y1 1Y2 1Y3 1Y4 2Y1 2Y2 2Y3 2Y4
1Q 2Q
s5
SUB-CYCLE
BIT 3
TX BIT 0
TX BIT 1
TX BIT 2
TX BIT 3
INTERUPT
RX BIT 3

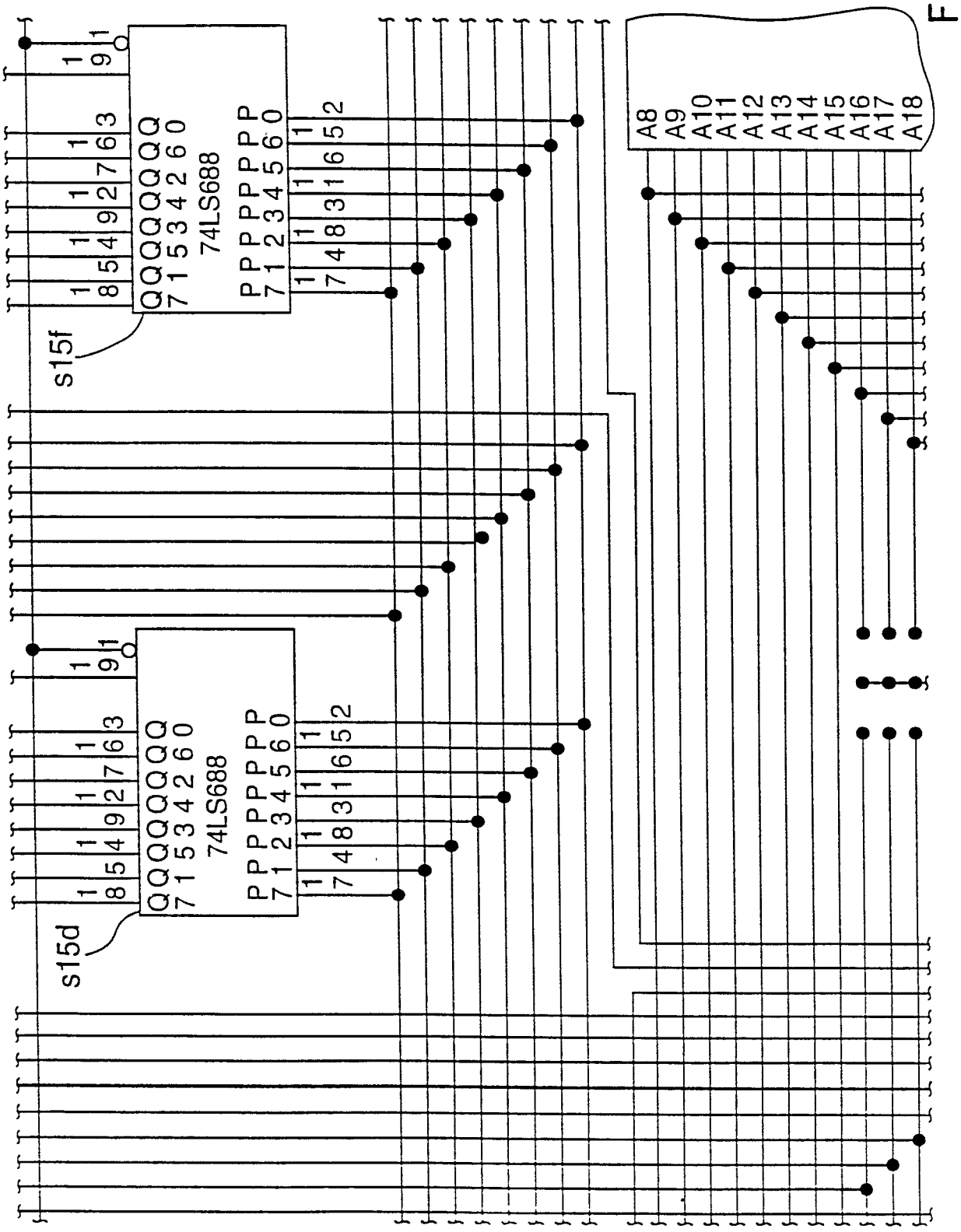
s15f
s15d
74LS688
74LS688
A8
A9
A10
A11
A12
A13
A14
A15
A16
A17
A18

FIG.4J.

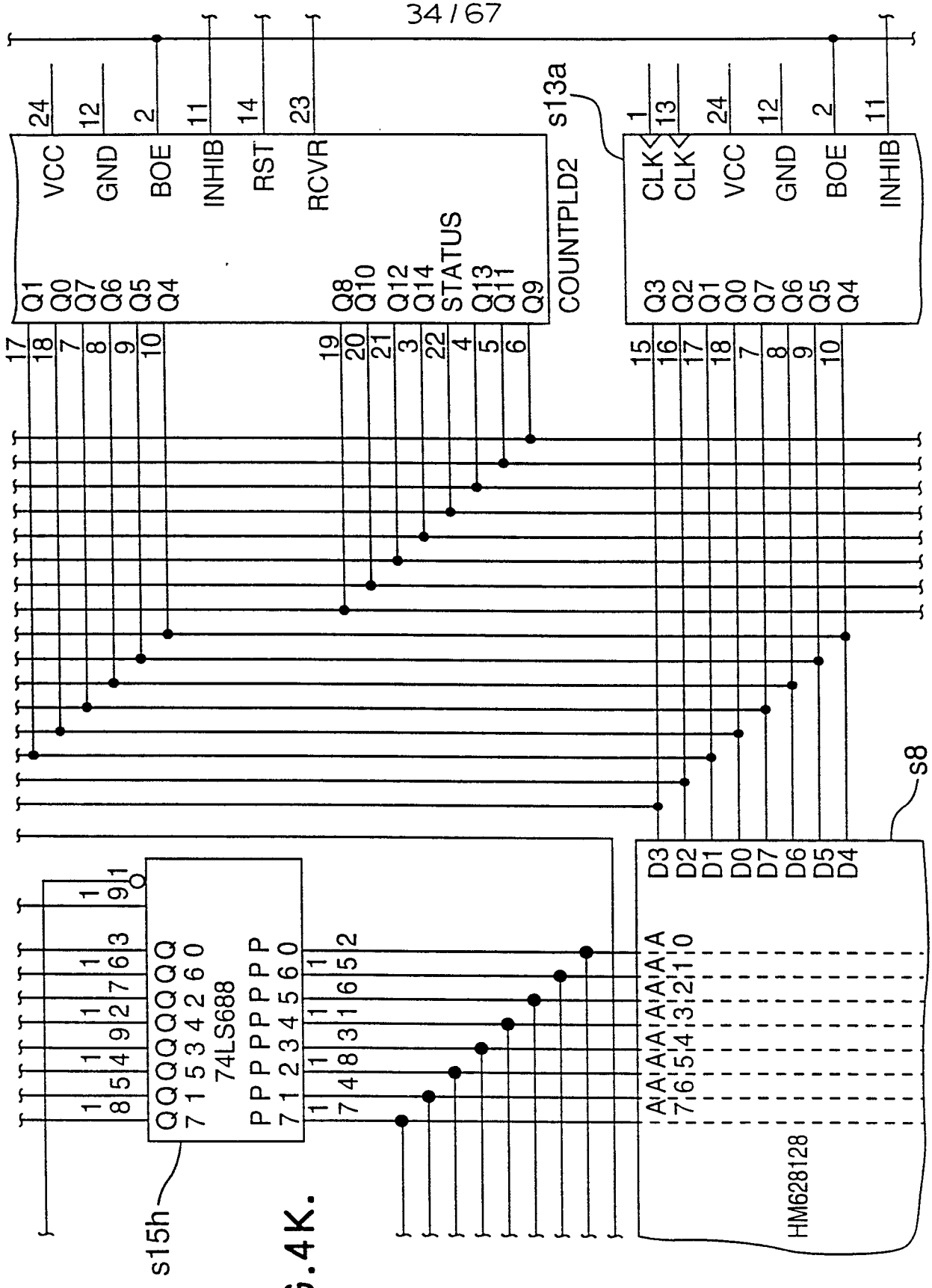
s13a
COUNTPLD2
VCC
GND
BOE
INHIB
RST
RCVR
CLK
CLK
Q1 Q0 Q7 Q6 Q5 Q4
Q8 Q10 Q12 Q14 STATUS Q13 Q11 Q9
Q3 Q2 Q1 Q0 Q7 Q6 Q5 Q4
s8
D3 D2 D1 D0 D7 D6 D5 D4
A7 A6 A5 A4 A3 A2 A1 A0
HM628128
s15h
74LS688
Q7 Q5 Q3 Q4 Q2 Q6 Q0
P7 P1 P2 P3 P4 P5 P6 P0

FIG.4K.

FIG.4L.

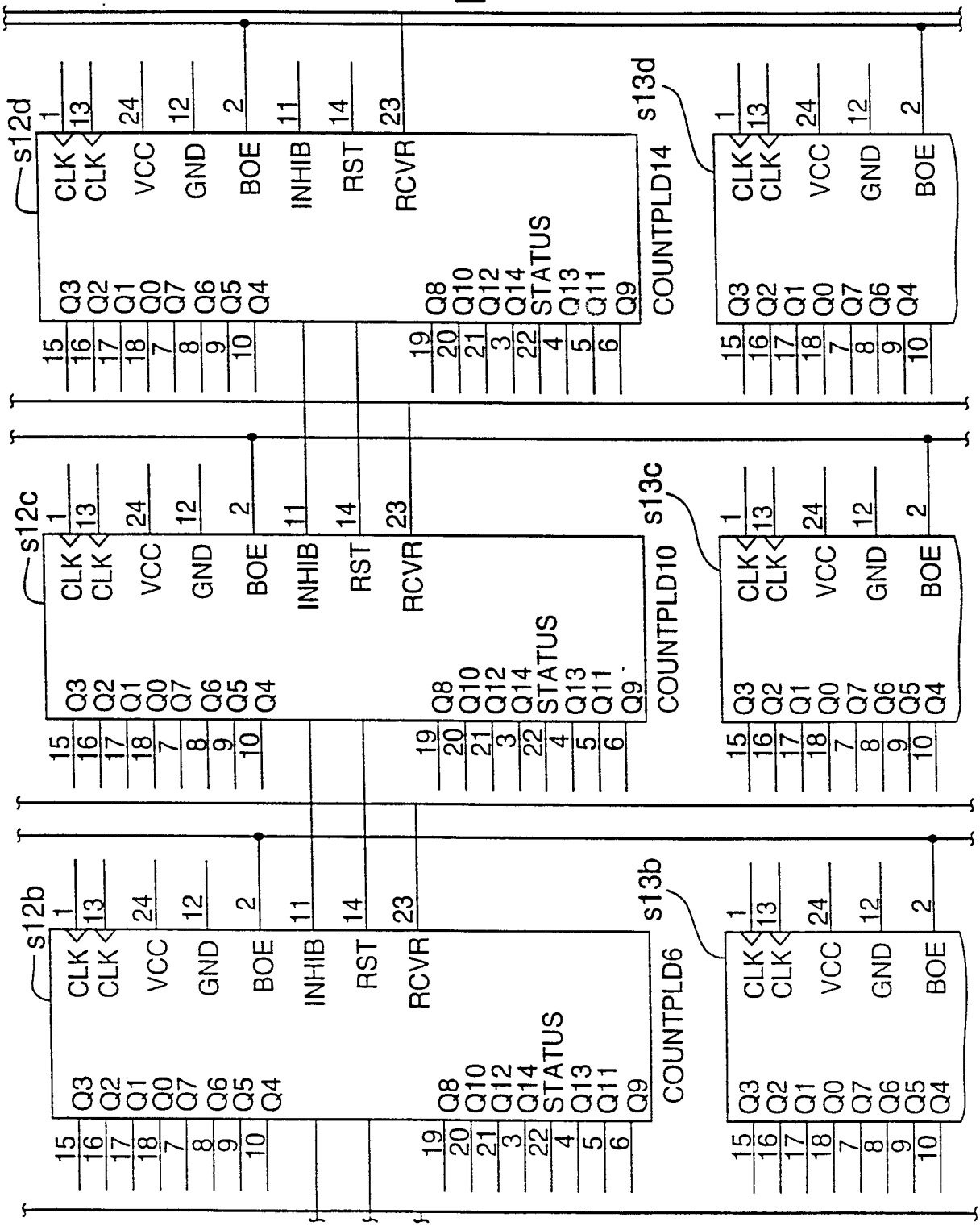
s12d
s13d
s12c
s13c
s12b
s13b
COUNTPLD14
COUNTPLD10
COUNTPLD6
CLK
VCC
GND
BOE
INHIB
RST
RCVR
STATUS
Q0
Q1
Q2
Q3
Q4
Q5
Q6
Q7
Q8
Q9
Q10
Q11
Q12
Q13
Q14

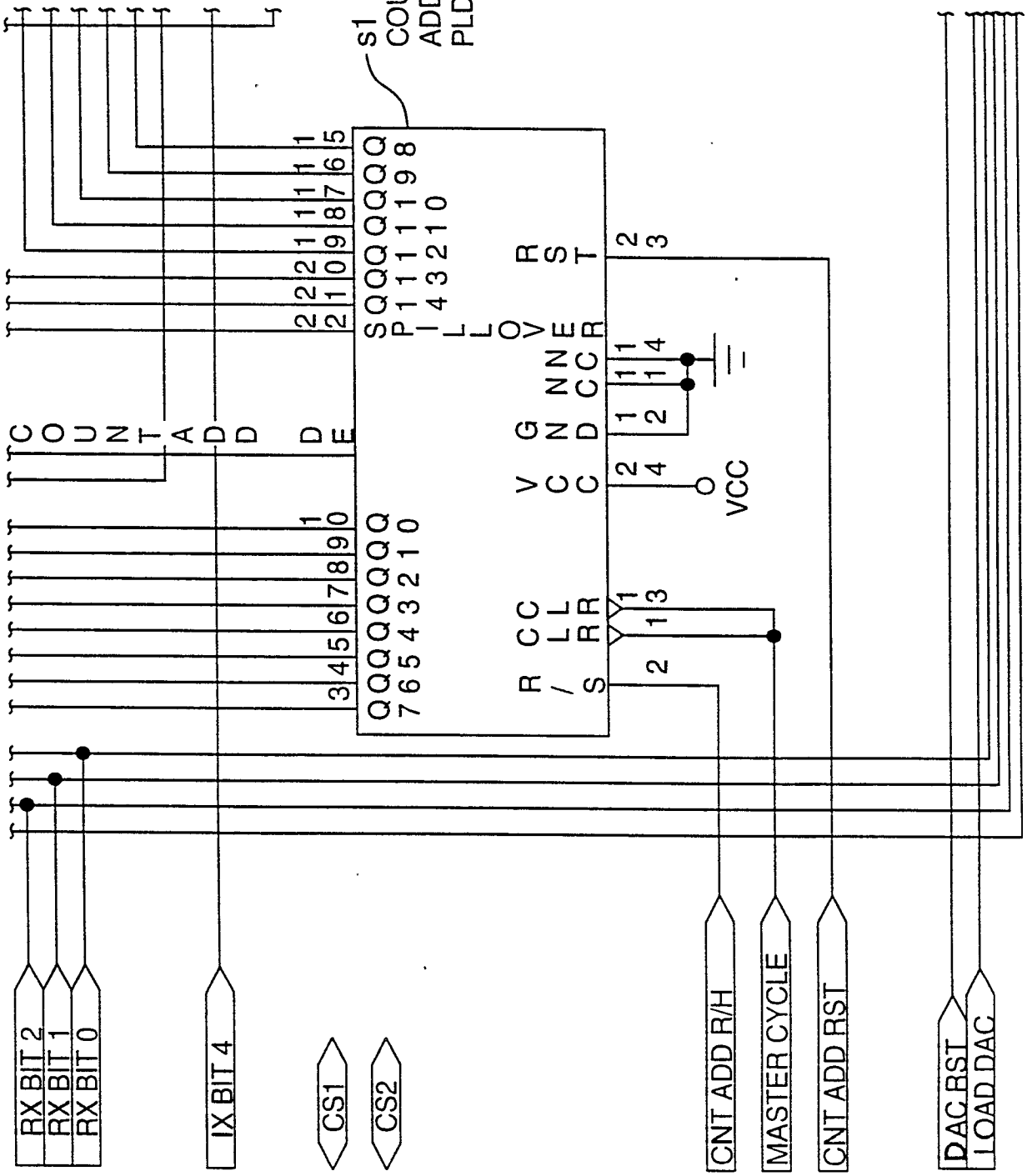
s1
COUNT
ADDRESS
PLD
COUNT
ADD
DE
VCC
RX BIT 2
RX BIT 1
RX BIT 0
IX BIT 4
CS1
CS2
CNT ADD R/H
MASTER CYCLE
CNT ADD RST
DAC RST
LOAD DAC

FIG.4M.

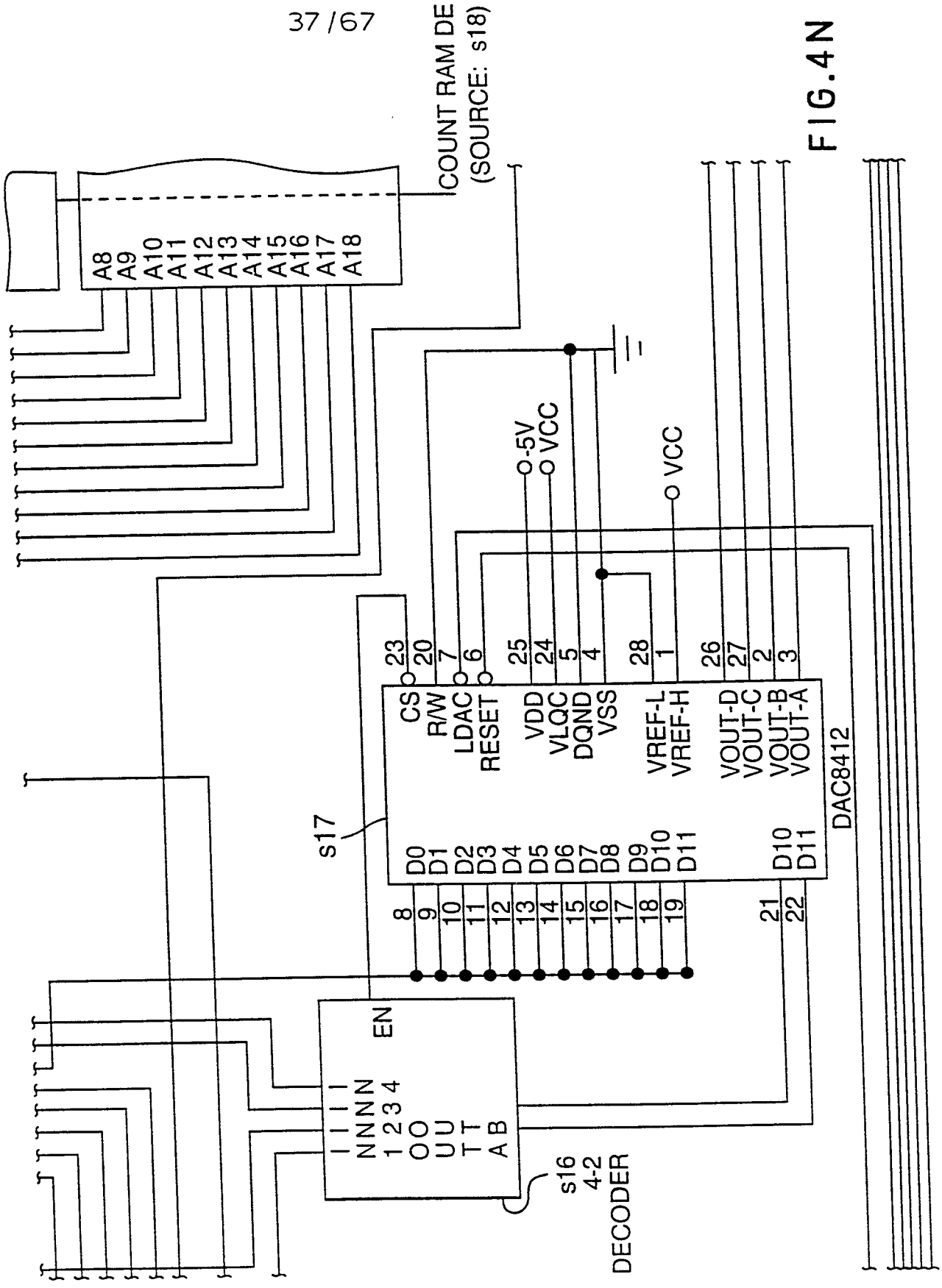
COUNT RAM DE
(SOURCE: s18)
A8
A9
A10
A11
A12
A13
A14
A15
A16
A17
A18
0-5V
VCC
VCC
CS
R/W
LDAC
RESET
VDD
VLQC
DQND
VSS
VREF-L
VREF-H
VOUT-D
VOUT-C
VOUT-B
VOUT-A
DAC8412
s17
D0
D1
D2
D3
D4
D5
D6
D7
D8
D9
D10
D11
EN
s16
4-2
DECODER

FIG.4N

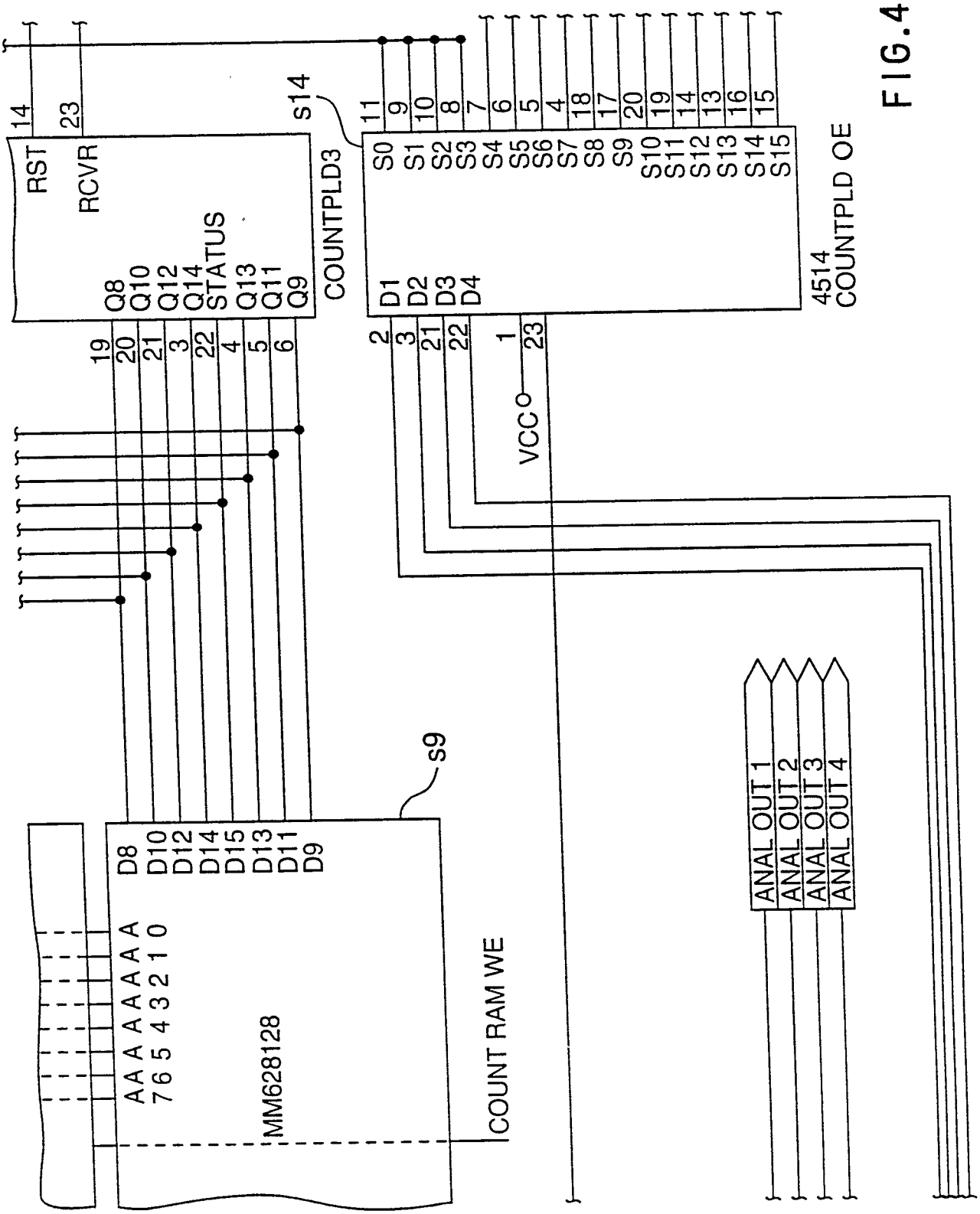
14
23
RST
RCVR
Q8
Q10
Q12
Q14
STATUS
Q13
Q11
Q9
COUNTPLD3
s14
11
9
10
8
7
6
5
4
18
17
20
19
14
13
16
15
S0
S1
S2
S3
S4
S5
S6
S7
S8
S9
S10
S11
S12
S13
S14
S15
D1
D2
D3
D4
4514
COUNTPLD OE
19
20
21
3
22
4
5
6
2
3
21
22
1
23
VCC
s9
D8
D10
D12
D14
D15
D13
D11
D9
A A A A A A A
7 6 5 4 3 2 1 0
MM628128
COUNT RAM WE
ANAL OUT 1
ANAL OUT 2
ANAL OUT 3
ANAL OUT 4

FIG.40.

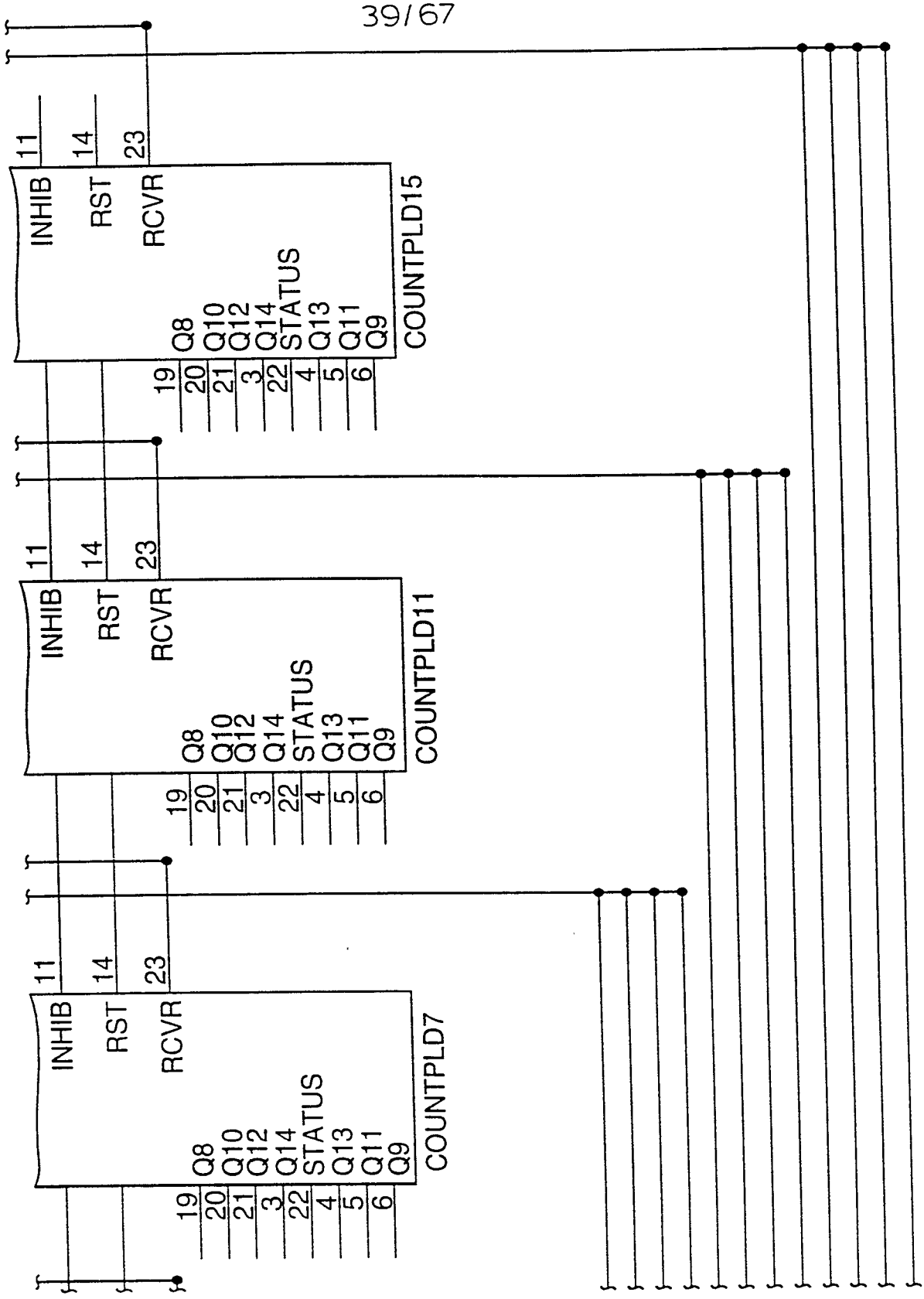
INHIB
RST
RCVR
11
14
23
Q8
Q10
Q12
Q14
STATUS
Q13
Q11
Q9
19
20
21
3
22
4
5
6
COUNTPLD15
COUNTPLD11
COUNTPLD7

FIG.4P.

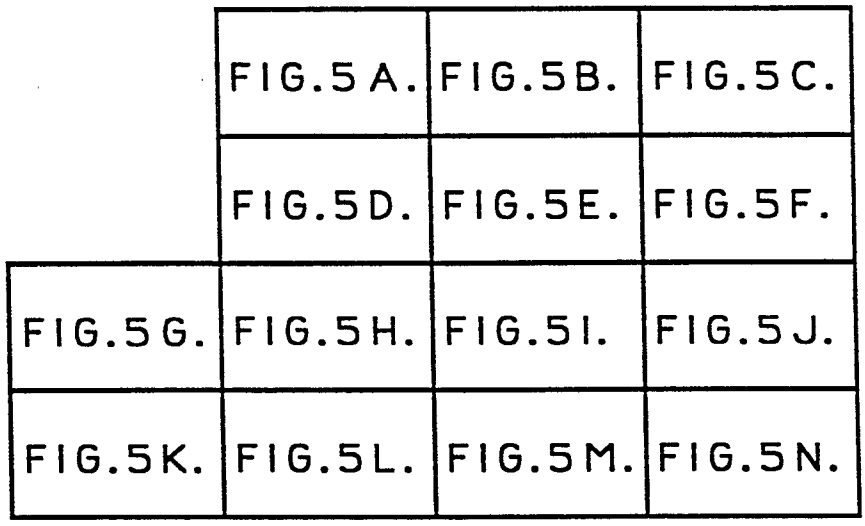

FIG.5.

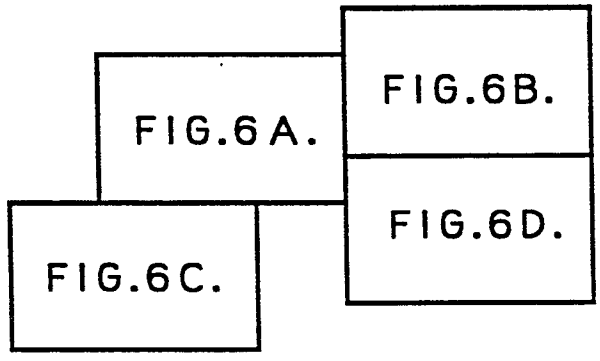

FIG.6.

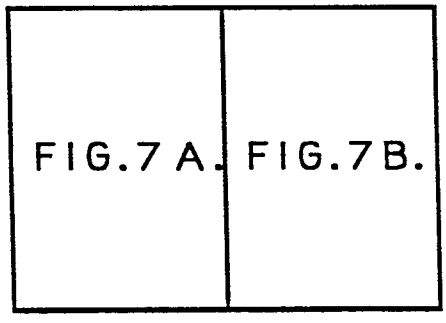

FIG.7.

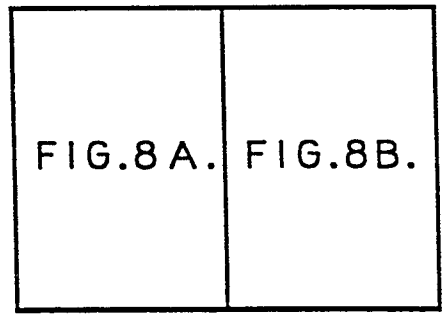

FIG.8.

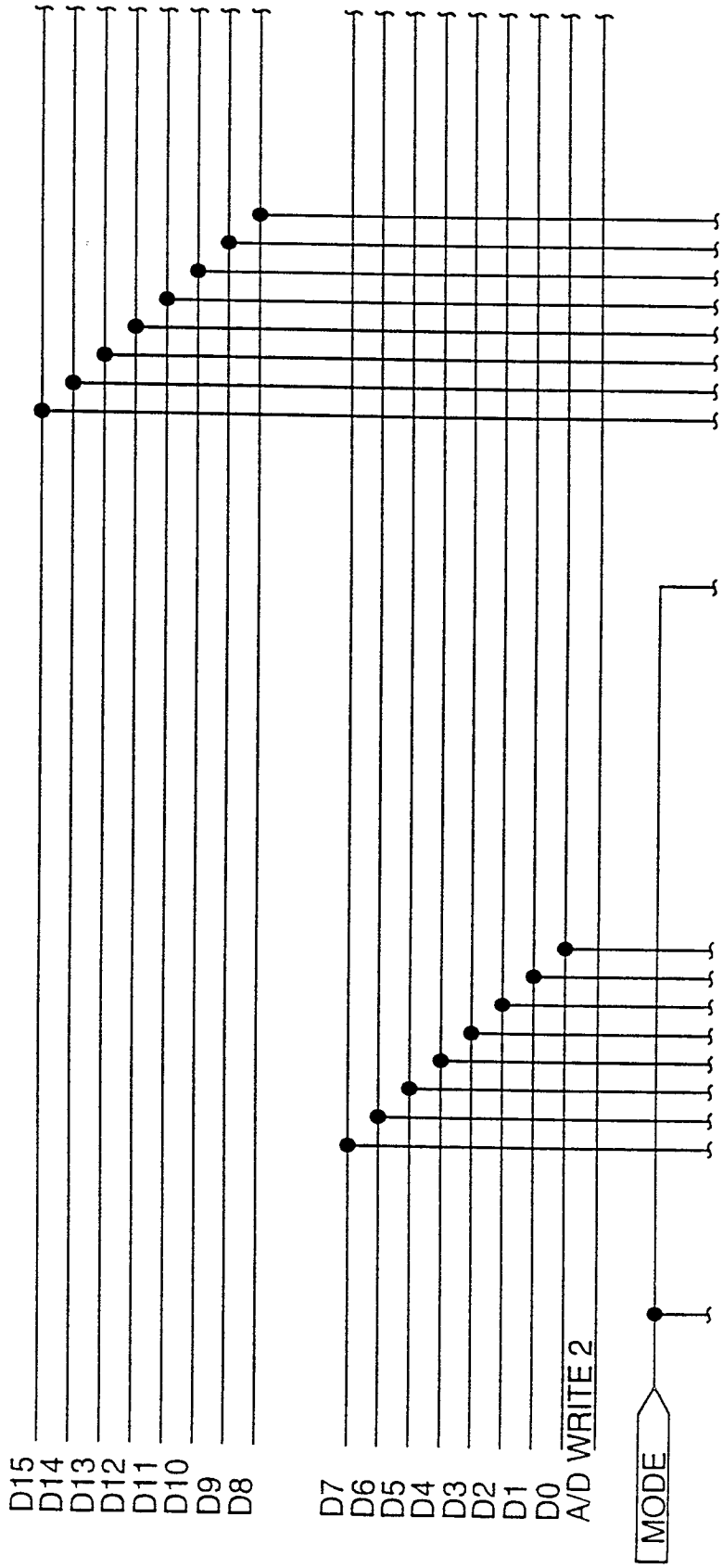
D15
D14
D13
D12
D11
D10
D9
D8
D7
D6
D5
D4
D3
D2
D1
D0
A/D WRITE 2
MODE

FIG.5A.

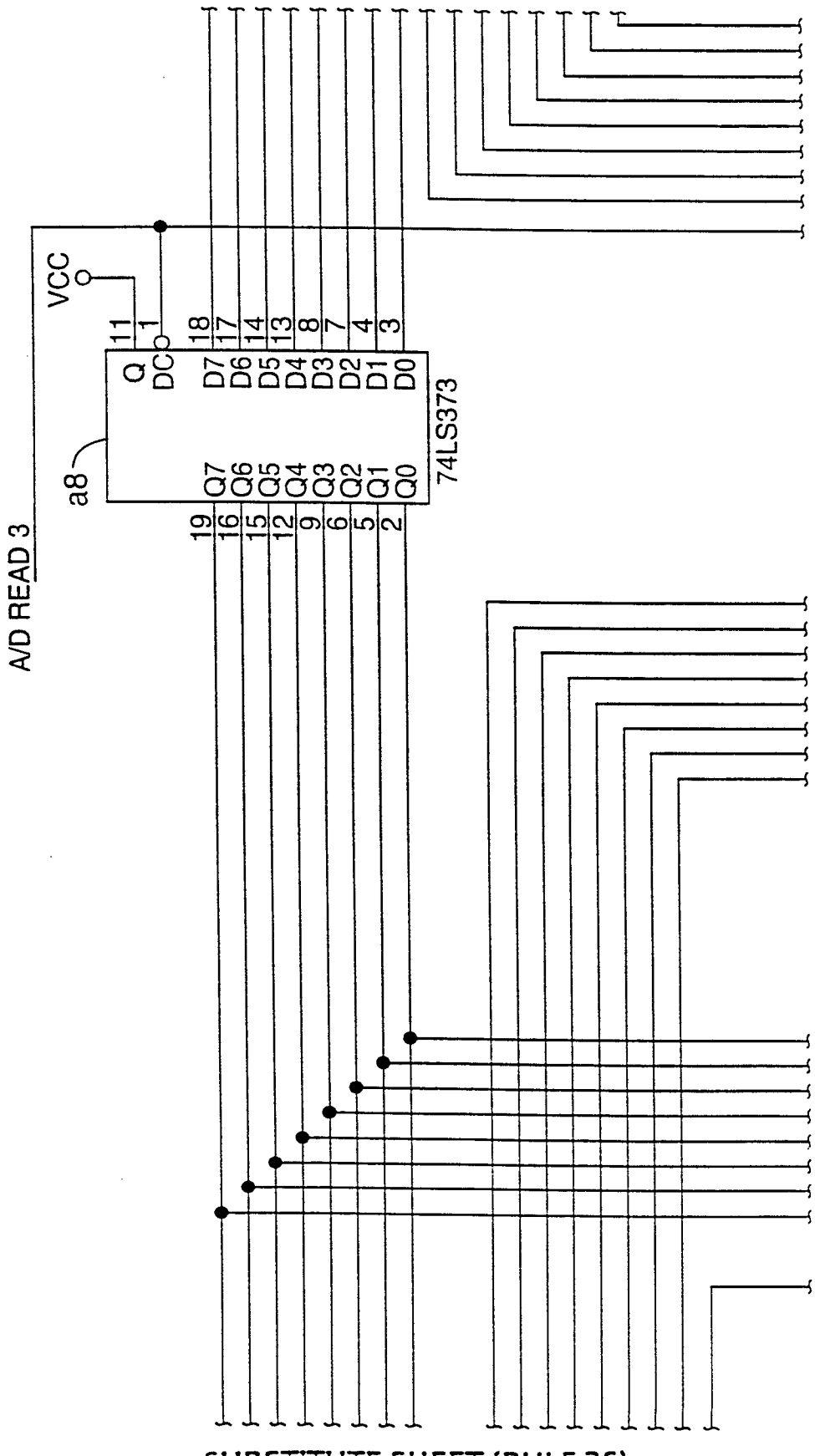
VCC
11
1
18
17
14
13
8
7
4
3
Q
DC
D7
D6
D5
D4
D3
D2
D1
D0
74LS373
a8
Q7
Q6
Q5
Q4
Q3
Q2
Q1
Q0
19
16
15
12
9
6
5
2
A/D READ 3

FIG.5B.

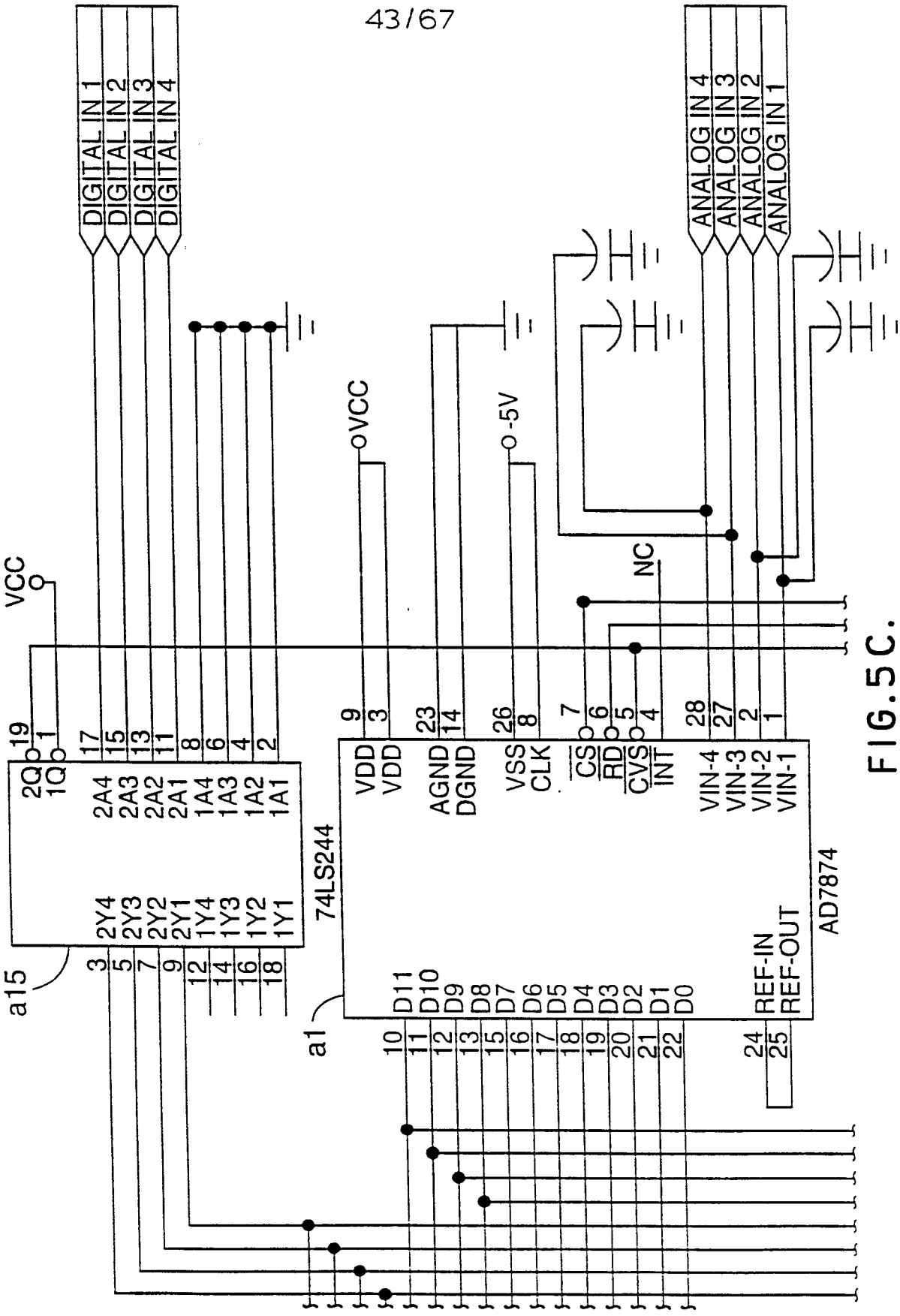
DIGITAL IN 1
DIGITAL IN 2
DIGITAL IN 3
DIGITAL IN 4
ANALOG IN 4
ANALOG IN 3
ANALOG IN 2
ANALOG IN 1
VCC
-5V
NC
74LS244
AD7874
a15
a1

FIG.5C.

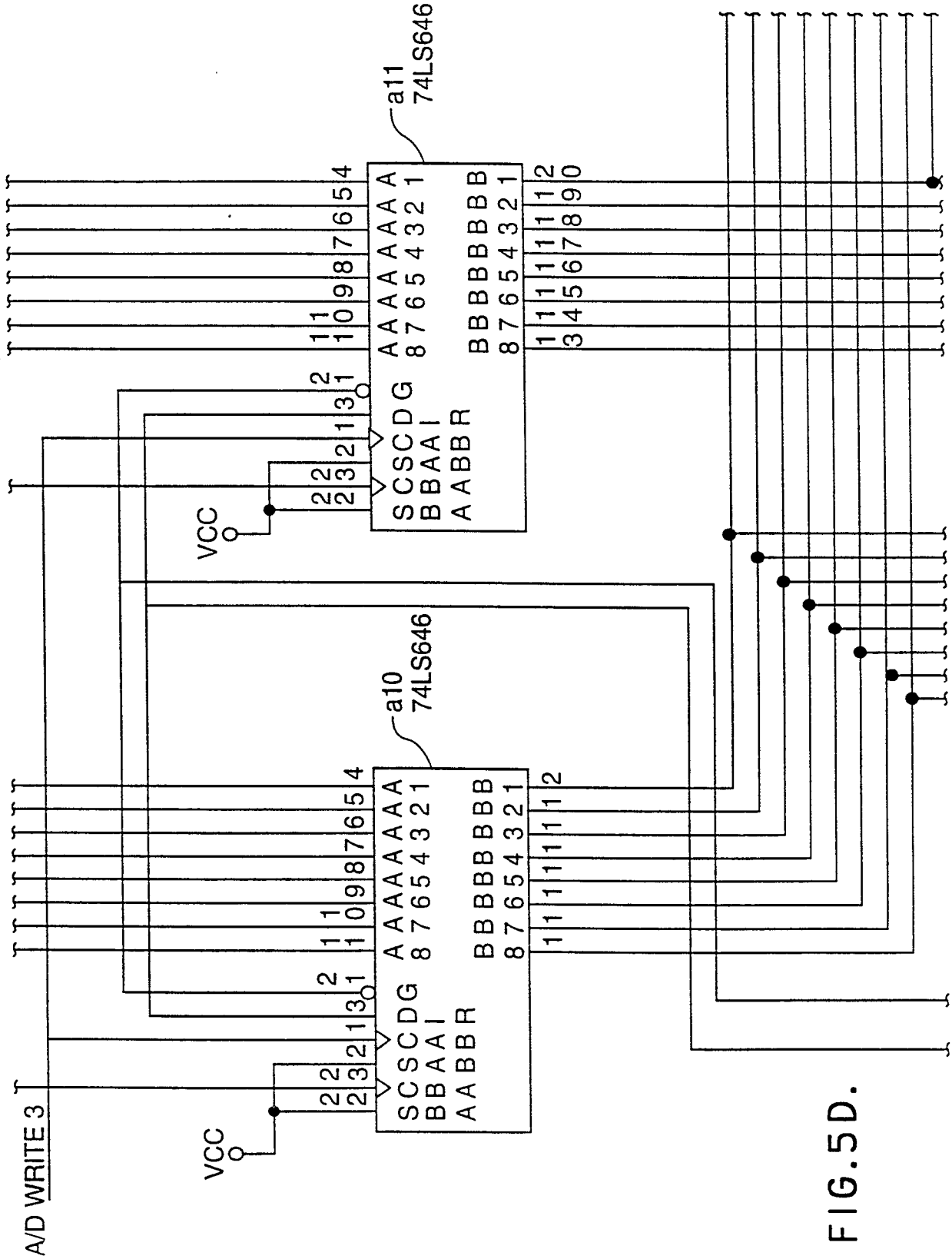

FIG.5D.

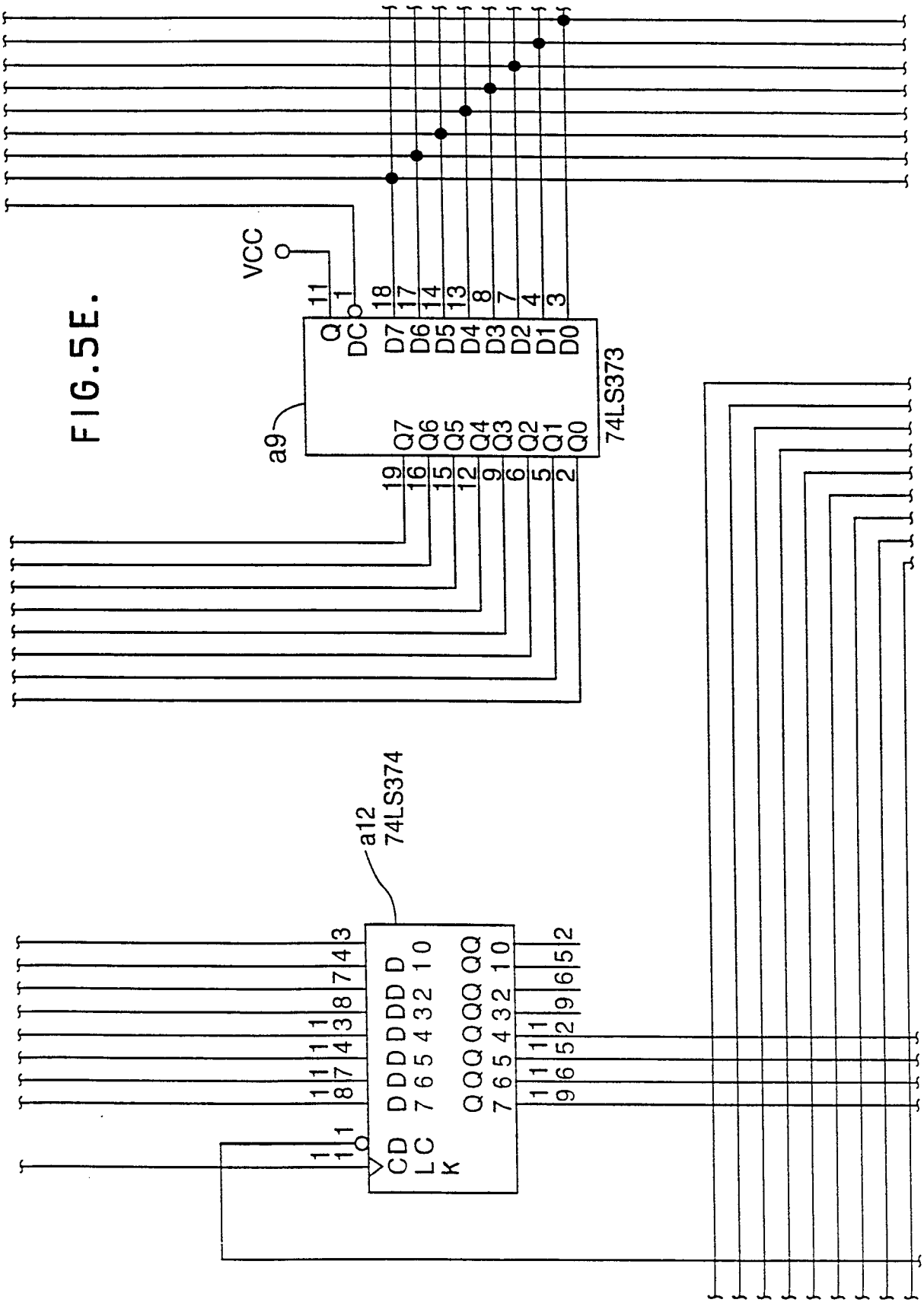
VCC
11
1
18
17
14
13
8
7
4
3
Q
DC
D7
D6
D5
D4
D3
D2
D1
D0
74LS373
a9
Q7
Q6
Q5
Q4
Q3
Q2
Q1
Q0
19
16
15
12
9
6
5
2
a12
74LS374
CD
LC
K
D D D D D D D D
7 6 5 4 3 2 1 0
Q Q Q Q Q Q Q Q
7 6 5 4 3 2 1 0

FIG.5E.

FIG.5F.

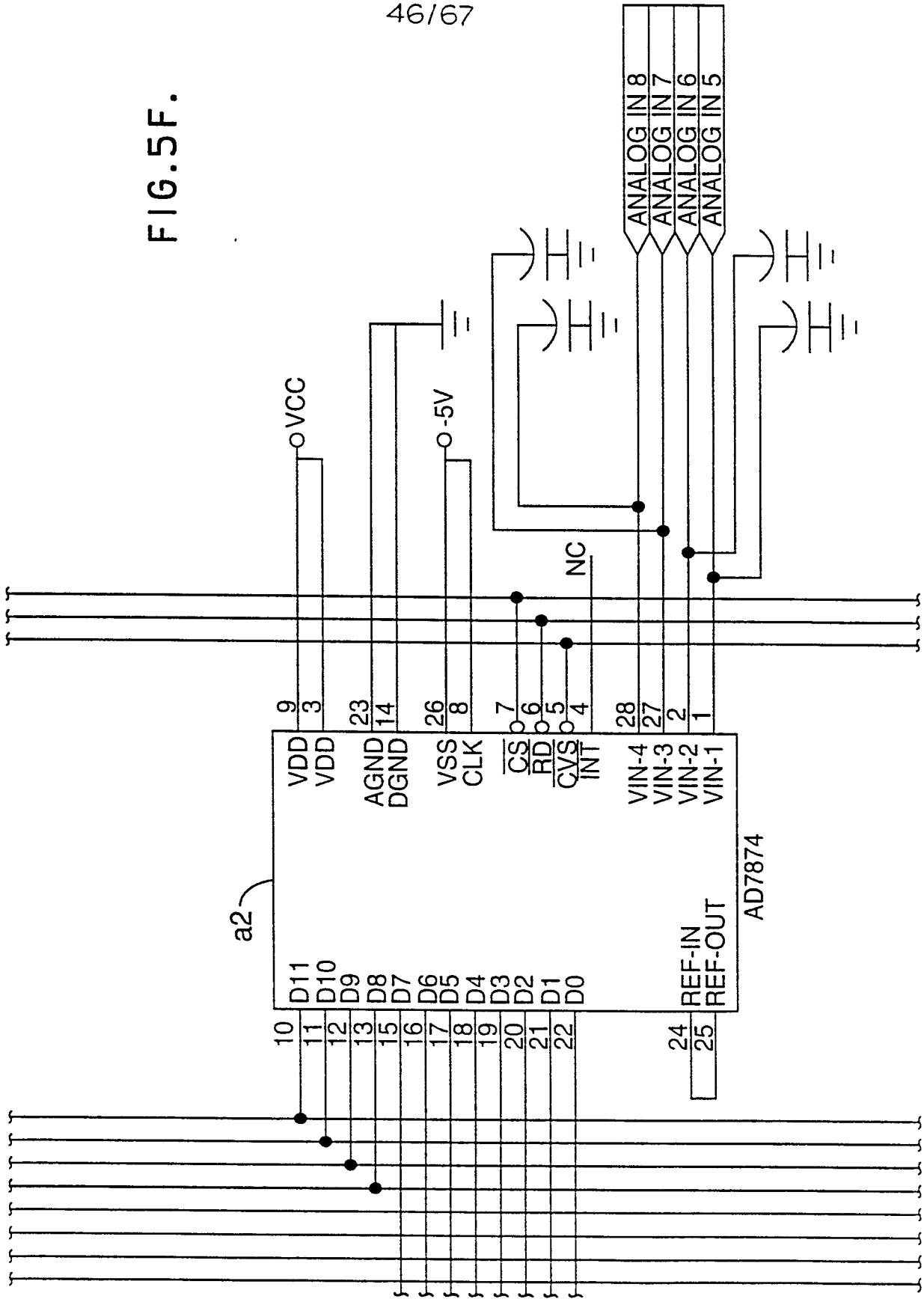
ANALOG IN 8
ANALOG IN 7
ANALOG IN 6
ANALOG IN 5
VCC
-5V
NC
9
3
23
14
26
8
7
6
5
4
28
27
2
1
VDD
VDD
AGND
DGND
VSS
CLK
CS
RD
CVS
INT
VIN-4
VIN-3
VIN-2
VIN-1
a2
AD7874
D11
D10
D9
D8
D7
D6
D5
D4
D3
D2
D1
D0
REF-IN
REF-OUT
10
11
12
13
15
16
17
18
19
20
21
22
24
25

FIG.5G.

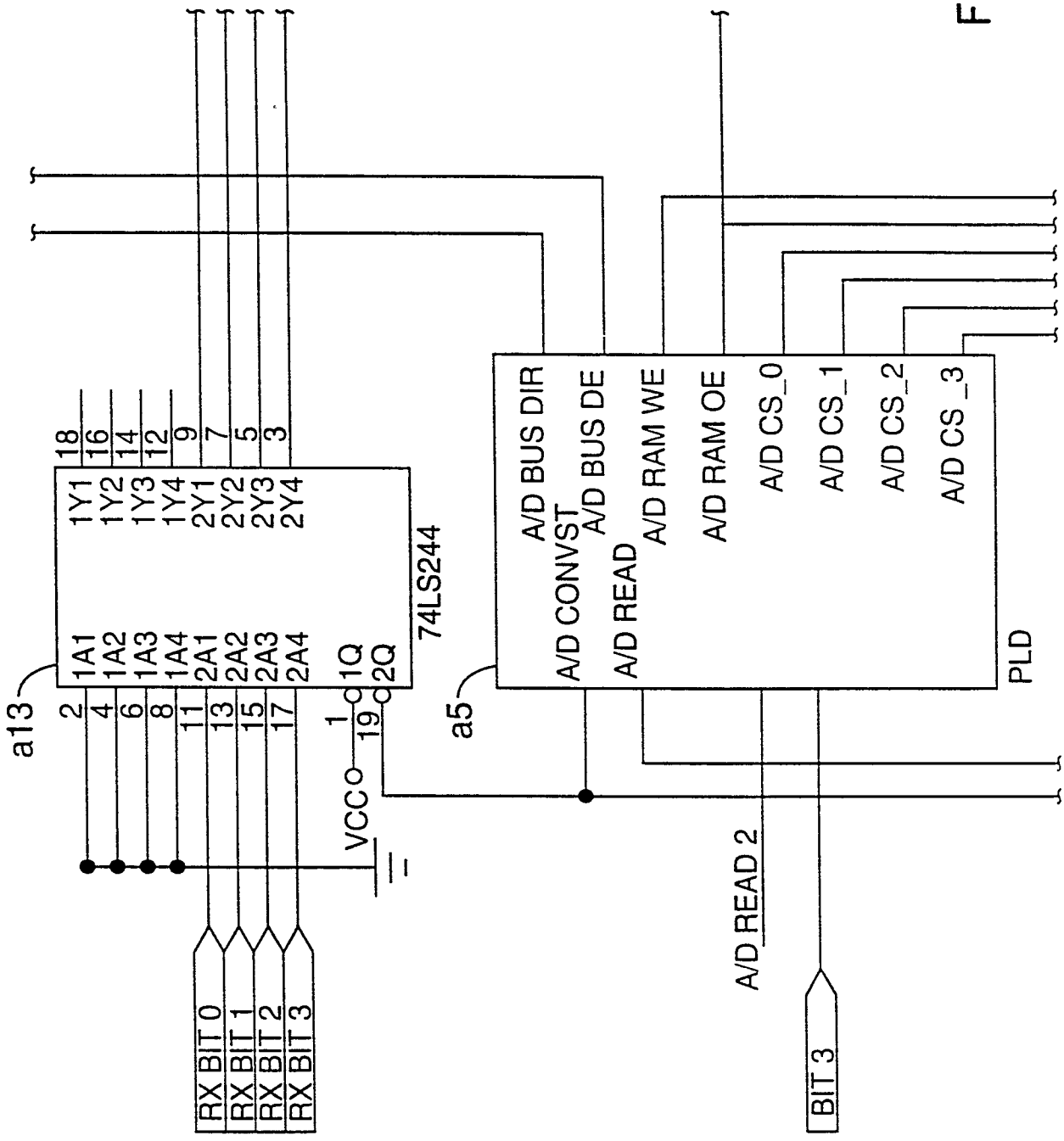
74LS244
1Y1
1Y2
1Y3
1Y4
2Y1
2Y2
2Y3
2Y4
1A1
1A2
1A3
1A4
2A1
2A2
2A3
2A4
1Q
2Q
VCC
a13
a5
A/D BUS DIR
A/D CONVST
A/D BUS DE
A/D READ
A/D RAM WE
A/D RAM OE
A/D CS_0
A/D CS_1
A/D CS_2
A/D CS_3
PLD
RX BIT 0
RX BIT 1
RX BIT 2
RX BIT 3
A/D READ 2
BIT 3

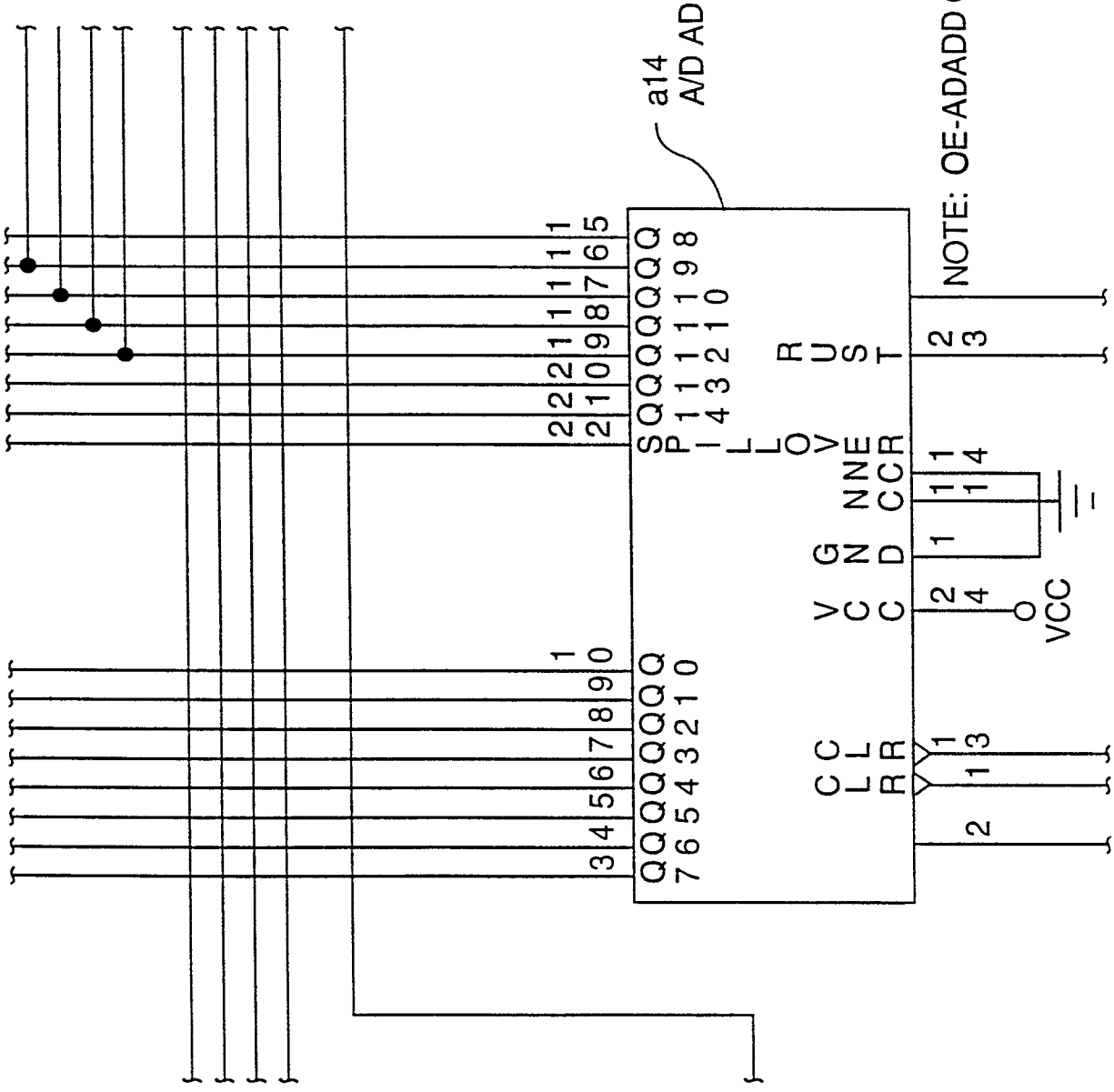

FIG.5H.

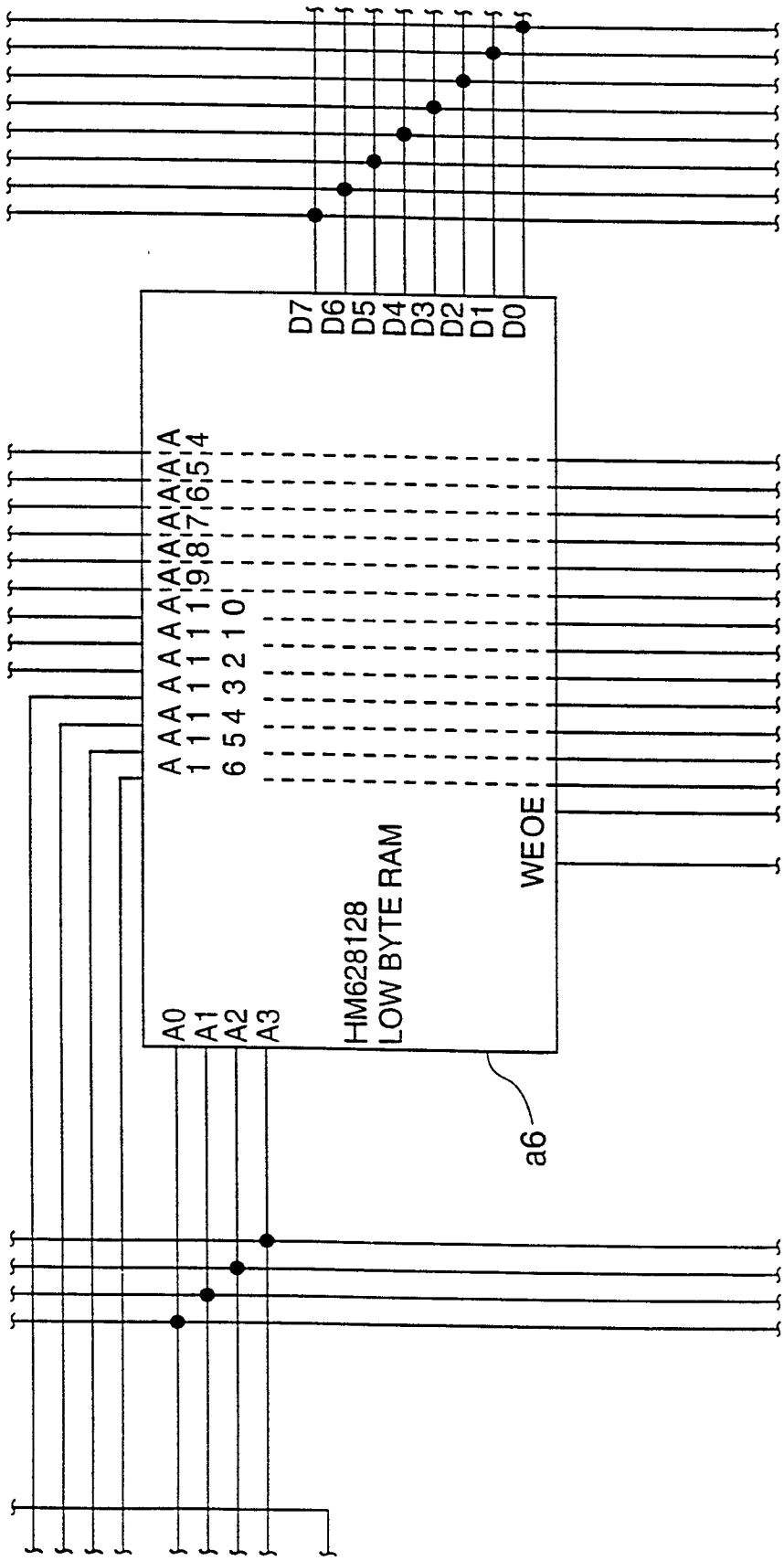
D7
D6
D5
D4
D3
D2
D1
D0
A
1
6
A
1
5
A
1
4
A
1
3
A
1
2
A
1
1
A
1
0
A
9
A
8
A
7
A
6
A
5
A
4
WE
OE
HM628128
LOW BYTE RAM
A0
A1
A2
A3
a6

FIG.5I.

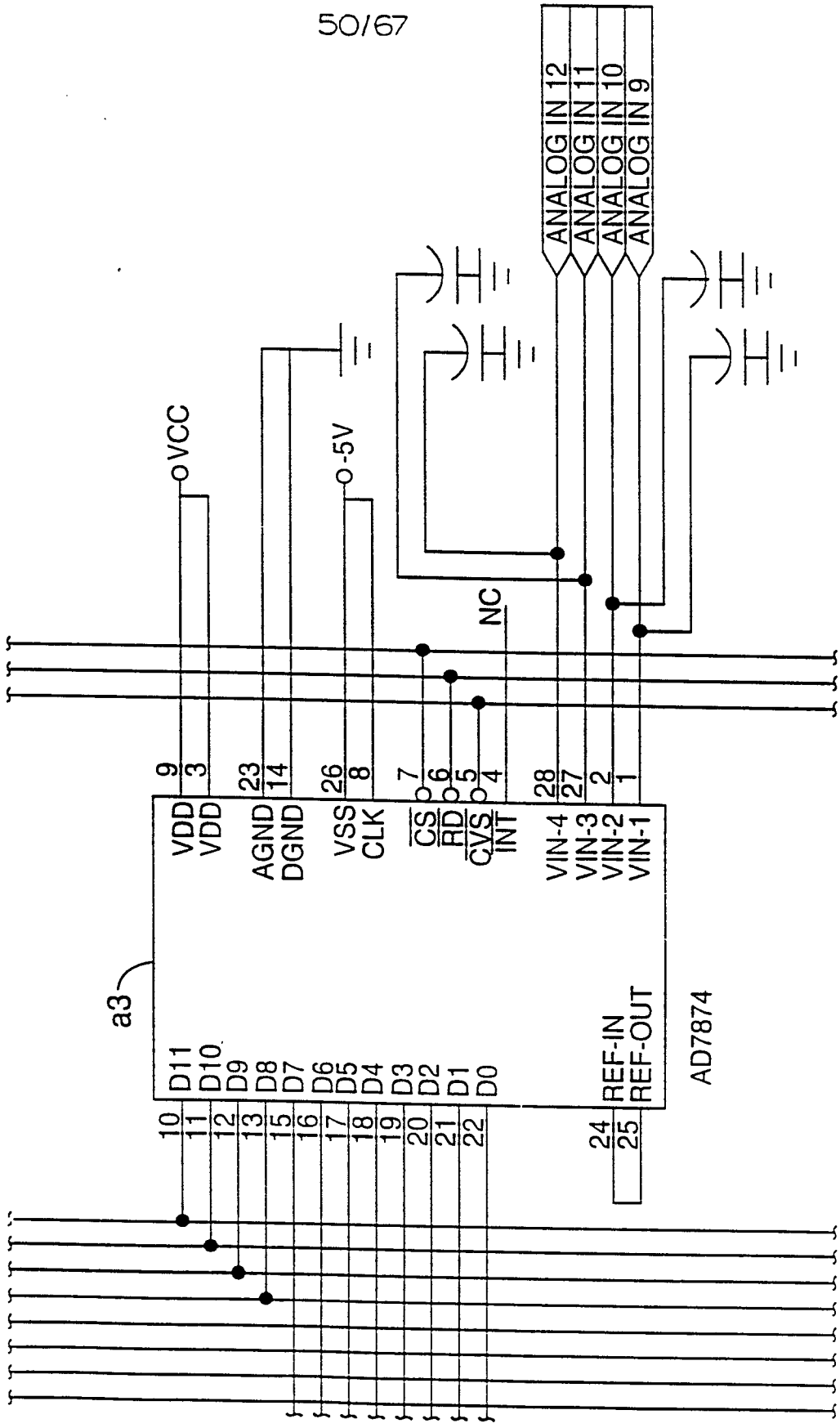
ANALOG IN 12
ANALOG IN 11
ANALOG IN 10
ANALOG IN 9
VCC
-5V
NC
VDD
VDD
AGND
DGND
VSS
CLK
CS
RD
CVS
INT
VIN-4
VIN-3
VIN-2
VIN-1
9
3
23
14
26
8
7
6
5
4
28
27
2
1
a3
D11
D10
D9
D8
D7
D6
D5
D4
D3
D2
D1
D0
REF-IN
REF-OUT
AD7874
10
11
12
13
15
16
17
18
19
20
21
22
24
25

FIG.5J.

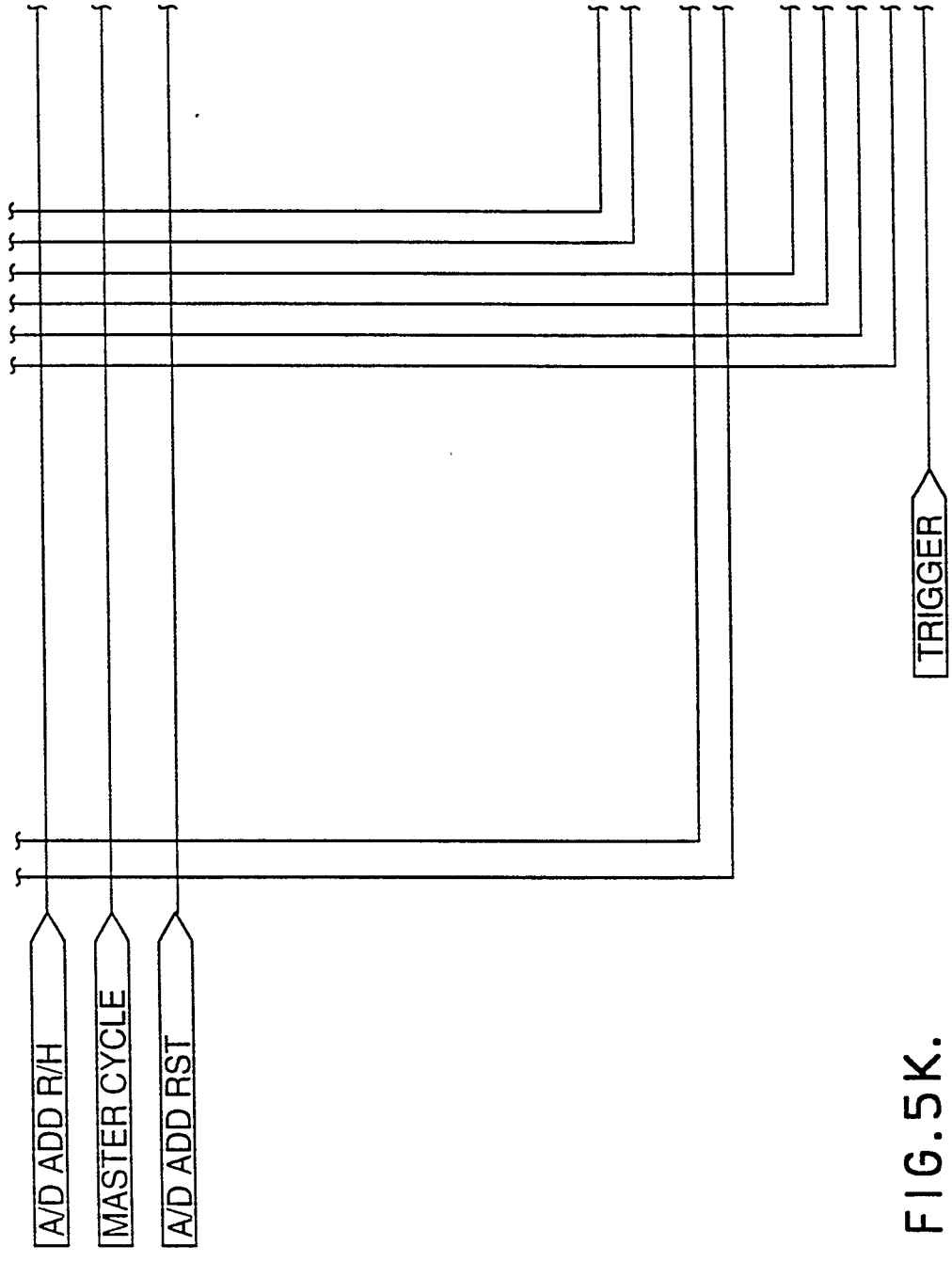

FIG.5K.

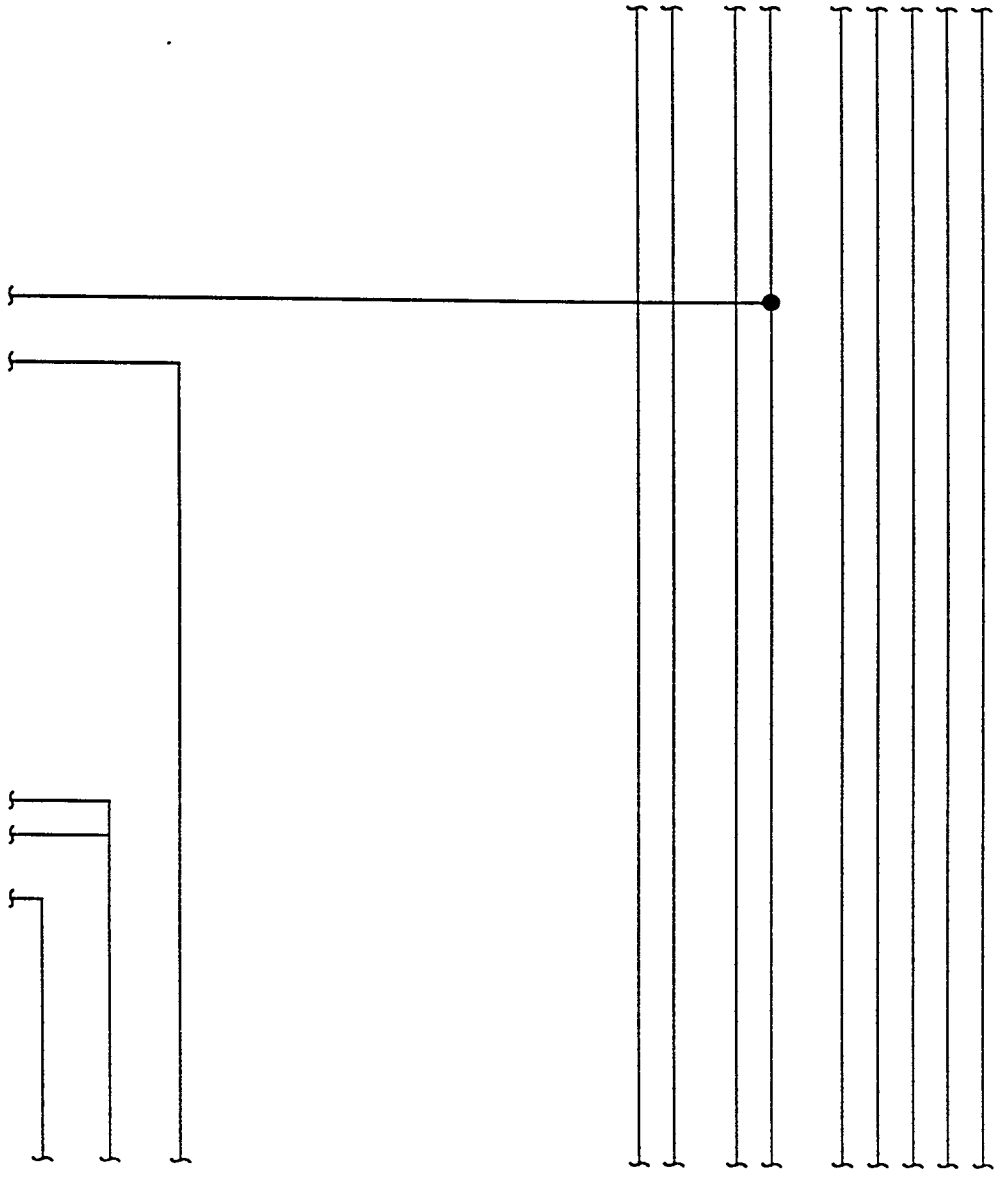

FIG.5L.

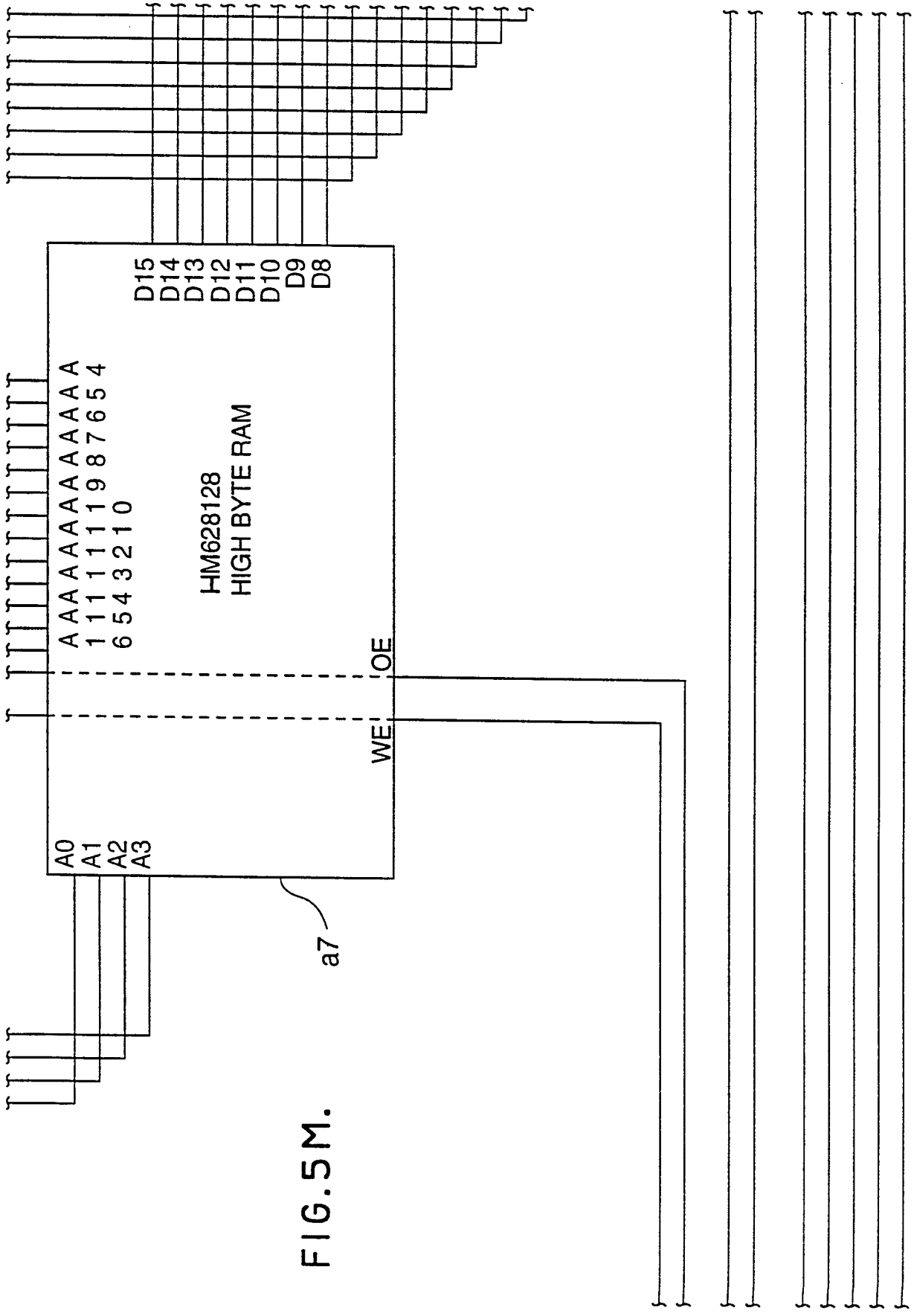
D15
D14
D13
D12
D11
D10
D9
D8
A A A A A A A A A A A A A A A A
1 1 1 1 1 1 1 9 8 7 6 5 4
6 5 4 3 2 1 0
HM628128
HIGH BYTE RAM
OE
WE
A0
A1
A2
A3
a7

FIG.5M.

FIG.5N.

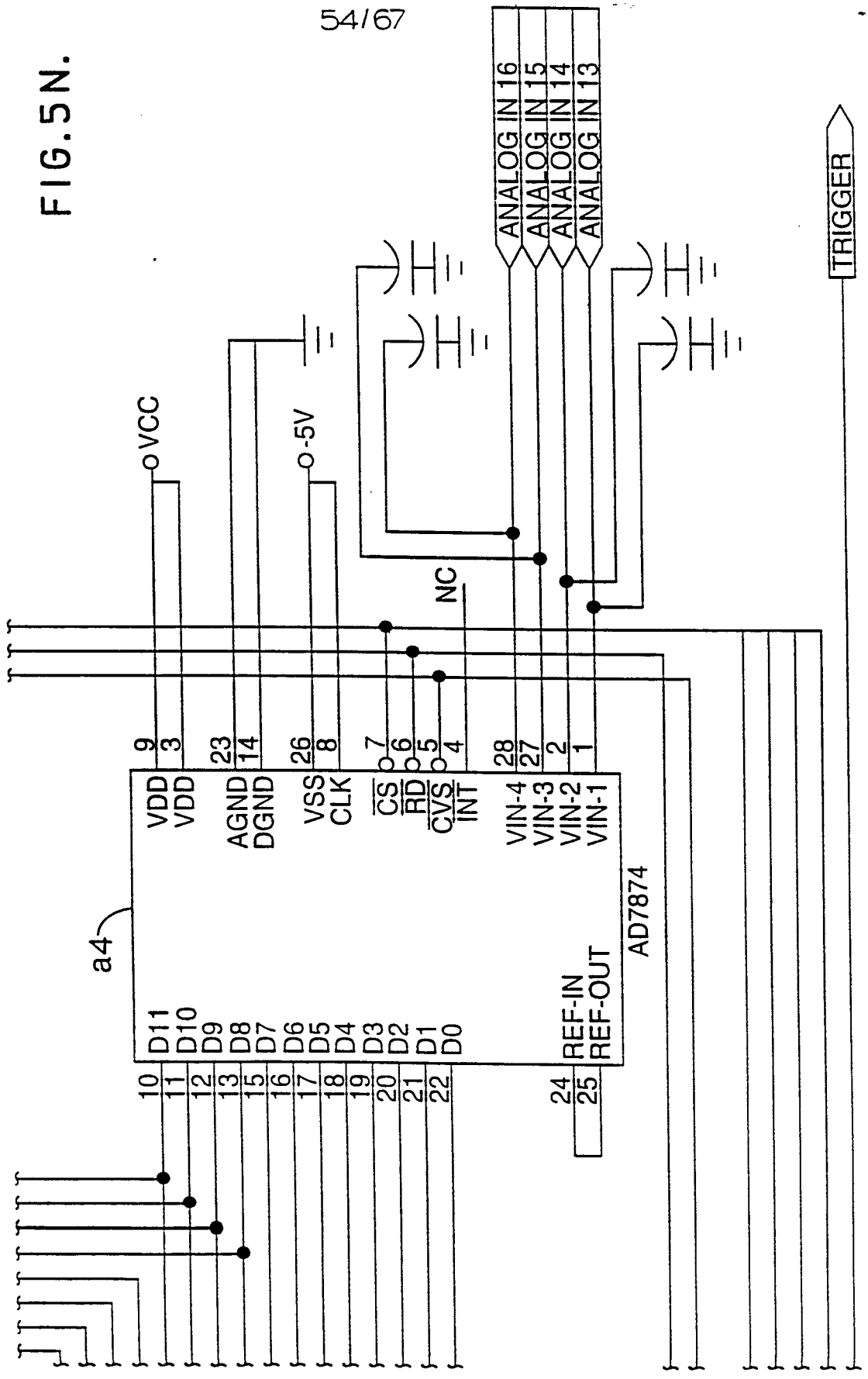
ANALOG IN 16
ANALOG IN 15
ANALOG IN 14
ANALOG IN 13
TRIGGER
VCC
-5V
NC
VDD
VDD
AGND
DGND
VSS
CLK
CS
RD
CVS
INT
VIN-4
VIN-3
VIN-2
VIN-1
9
3
23
14
26
8
7
6
5
4
28
27
2
1
a4
AD7874
D11
D10
D9
D8
D7
D6
D5
D4
D3
D2
D1
D0
REF-IN
REF-OUT
10
11
12
13
15
16
17
18
19
20
21
22
24
25

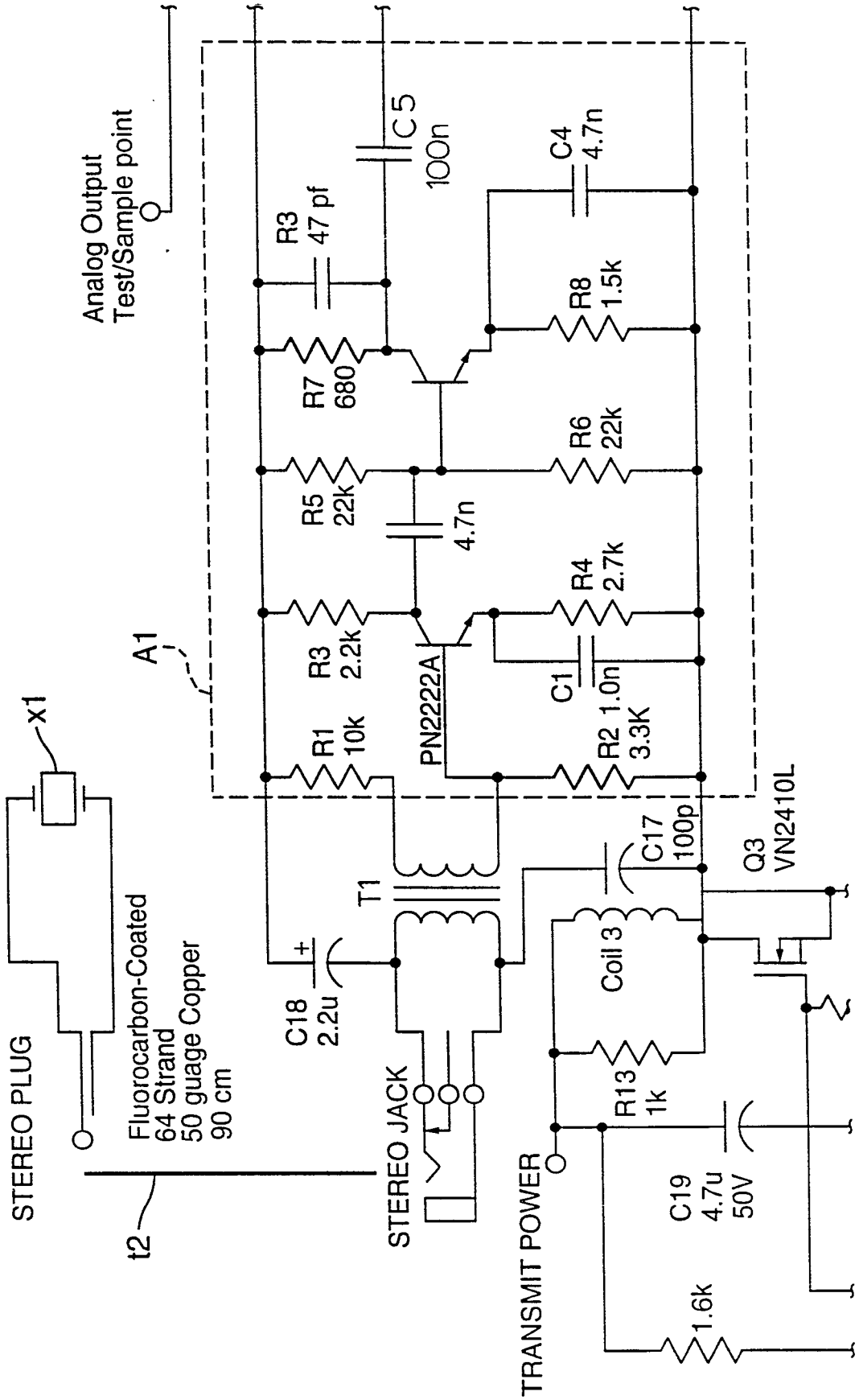
Analog Output
Test/Sample point
R3
47 pf
C5
100n
C4
4.7n
R8
1.5k
R7
680
R6
22k
R5
22k
4.7n
R4
2.7k
A1
R3
2.2k
PN2222A
C1
1.0n
R2
3.3K
R1
10k
x1
C17
100p
Q3
VN2410L
T1
Coil 3
C18
2.2u
R13
1k
C19
4.7u
50V
1.6k
STEREO PLUG
Fluorocarbon-Coated
64 Strand
50 guage Copper
90 cm
t2
STEREO JACK
TRANSMIT POWER

FIG.6A.

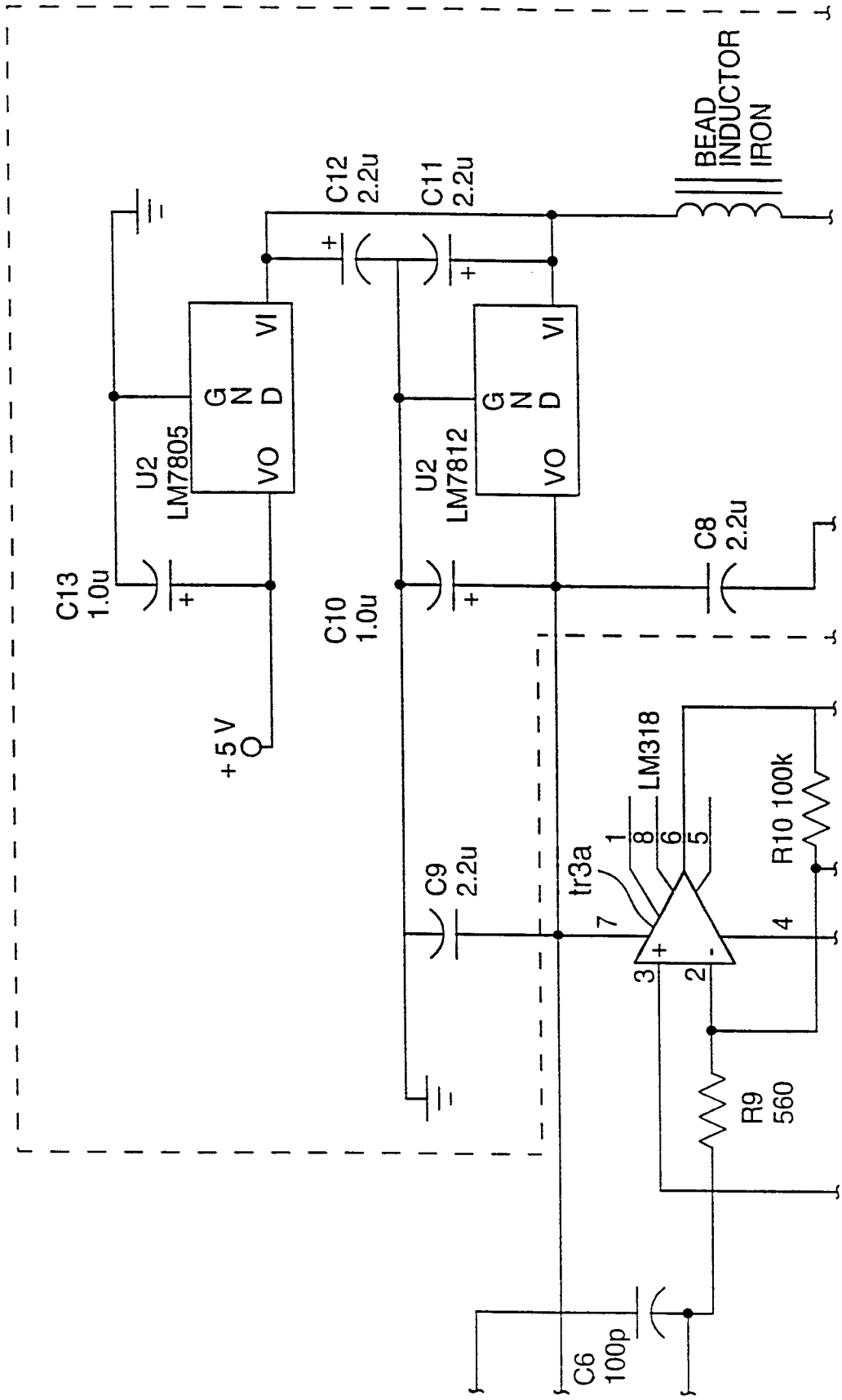
BEAD INDUCTOR IRON
C12 2.2u
C11 2.2u
U2 LM7805
U2 LM7812
G N D
VI
VO
C13 1.0u
C10 1.0u
C8 2.2u
+5 V
C9 2.2u
tr3a
LM318
R10 100k
R9 560
C6 100p

FIG.6B.

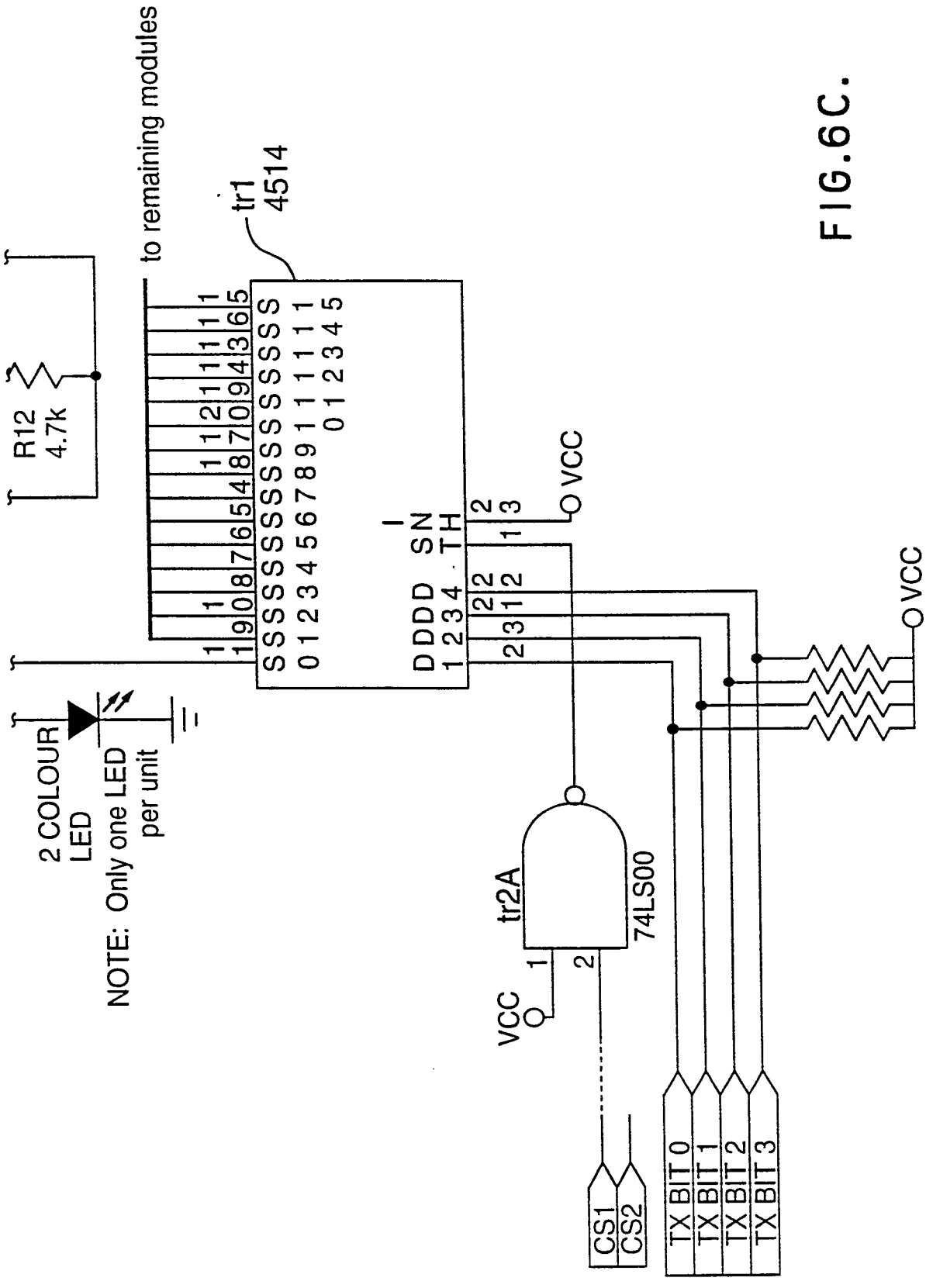
to remaining modules
tr1
4514
R12
4.7k
VCC
VCC
2 COLOUR
LED
NOTE: Only one LED
per unit
tr2A
74LS00
VCC
CS1
CS2
TX BIT 0
TX BIT 1
TX BIT 2
TX BIT 3

FIG.6C.

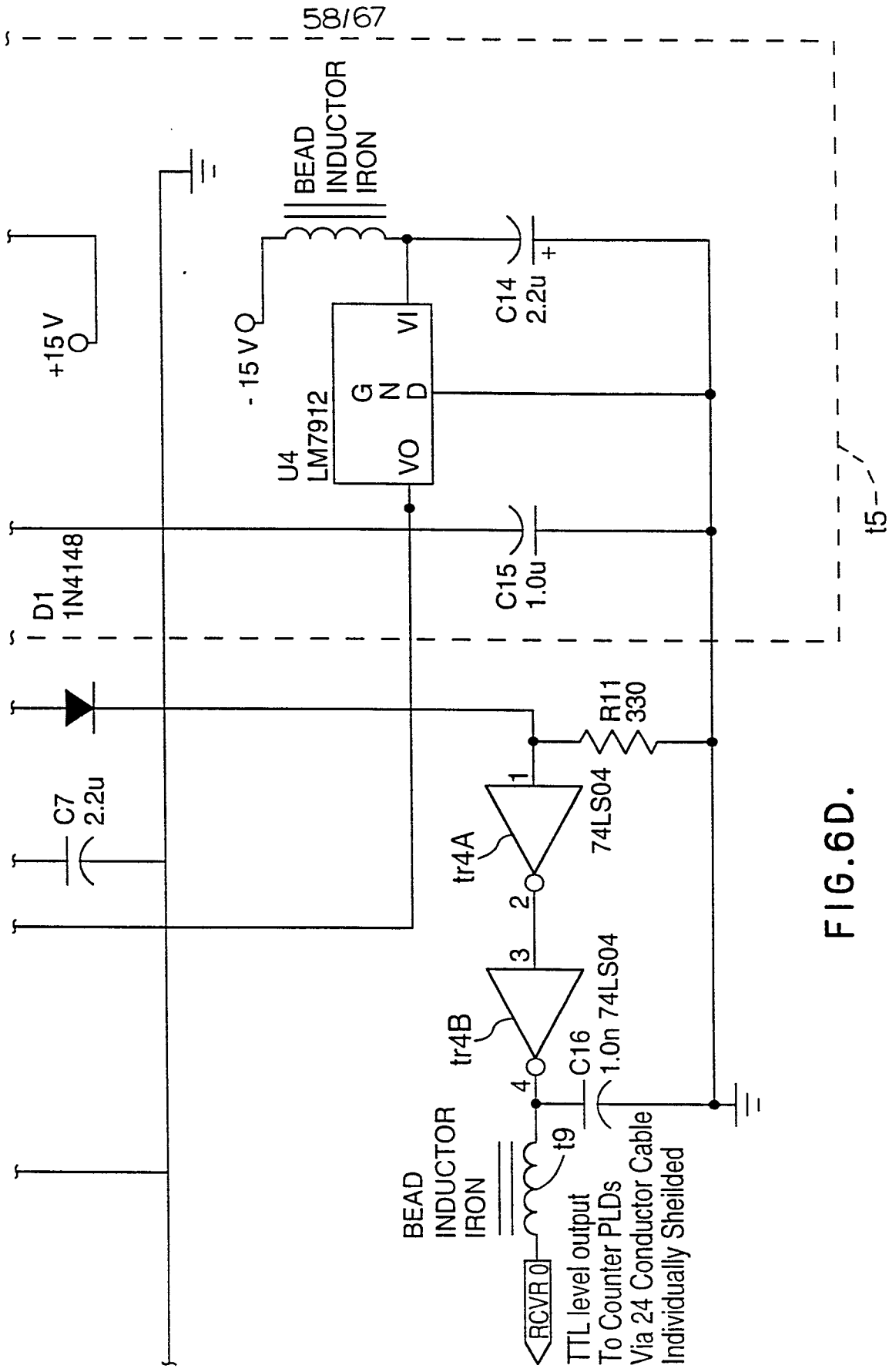
58/67
BEAD INDUCTOR IRON
+15 V
- 15 V
U4 LM7912
G N D
VI
VO
C14 2.2u
C15 1.0u
D1 1N4148
C7 2.2u
R11 330
tr4A
74LS04
tr4B
74LS04
C16 1.0n
t9
t5
BEAD INDUCTOR IRON
RCVR 0
TTL level output
To Counter PLDs
Via 24 Conductor Cable
Individually Sheilded

FIG.6D.

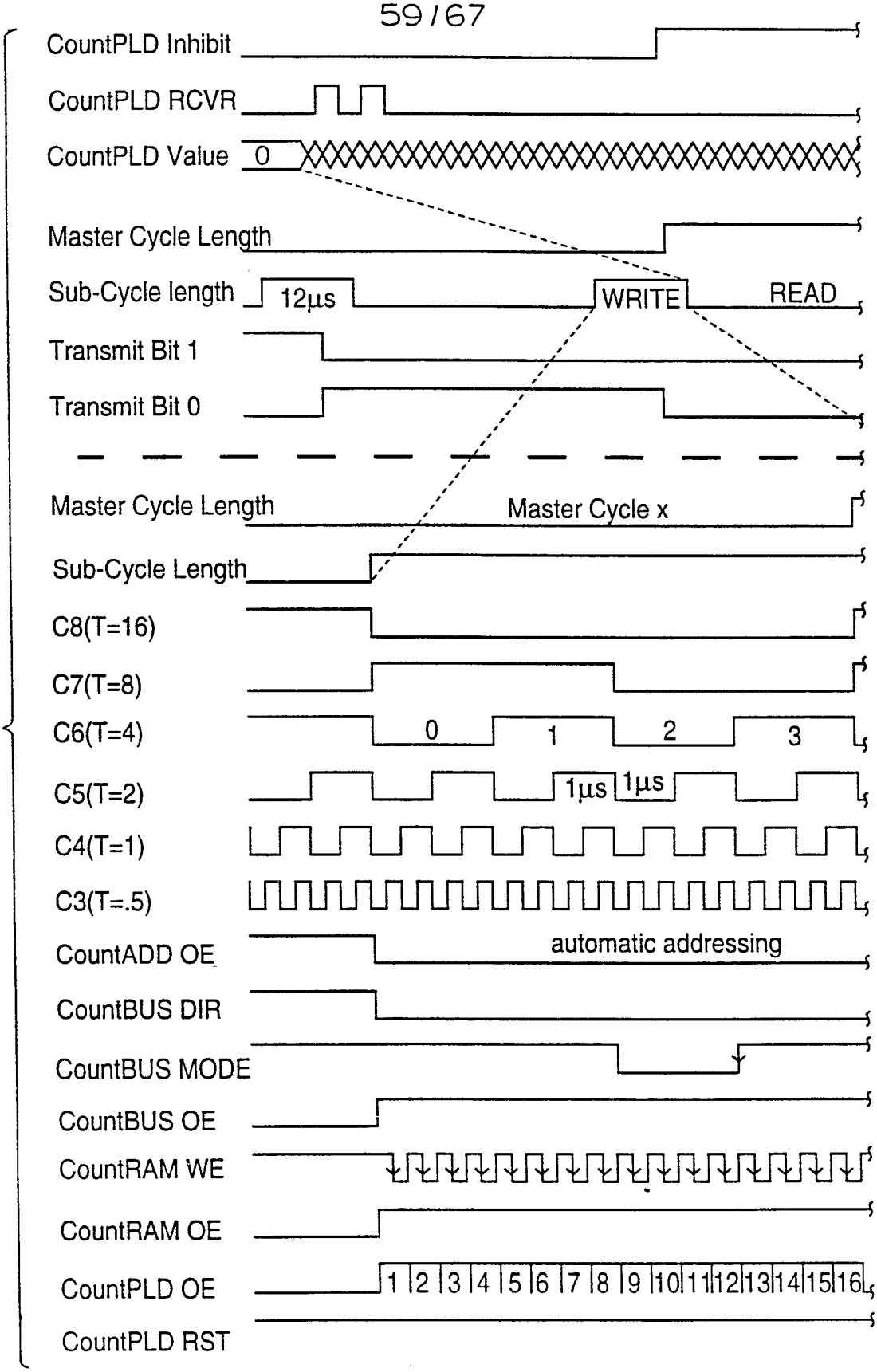
CountPLD Inhibit
CountPLD RCVR
CountPLD Value
0
Master Cycle Length
Sub-Cycle length
12µs
WRITE
READ
Transmit Bit 1
Transmit Bit 0
Master Cycle Length
Master Cycle x
Sub-Cycle Length
C8(T=16)
C7(T=8)
C6(T=4)
0
1
2
3
C5(T=2)
1µs
1µs
C4(T=1)
C3(T=.5)
CountADD OE
automatic addressing
CountBUS DIR
CountBUS MODE
CountBUS OE
CountRAM WE
CountRAM OE
CountPLD OE
1 2 3 4 5 6 7 8 9 10 11 12 13 14 15 16
CountPLD RST

FIG. 7 A.

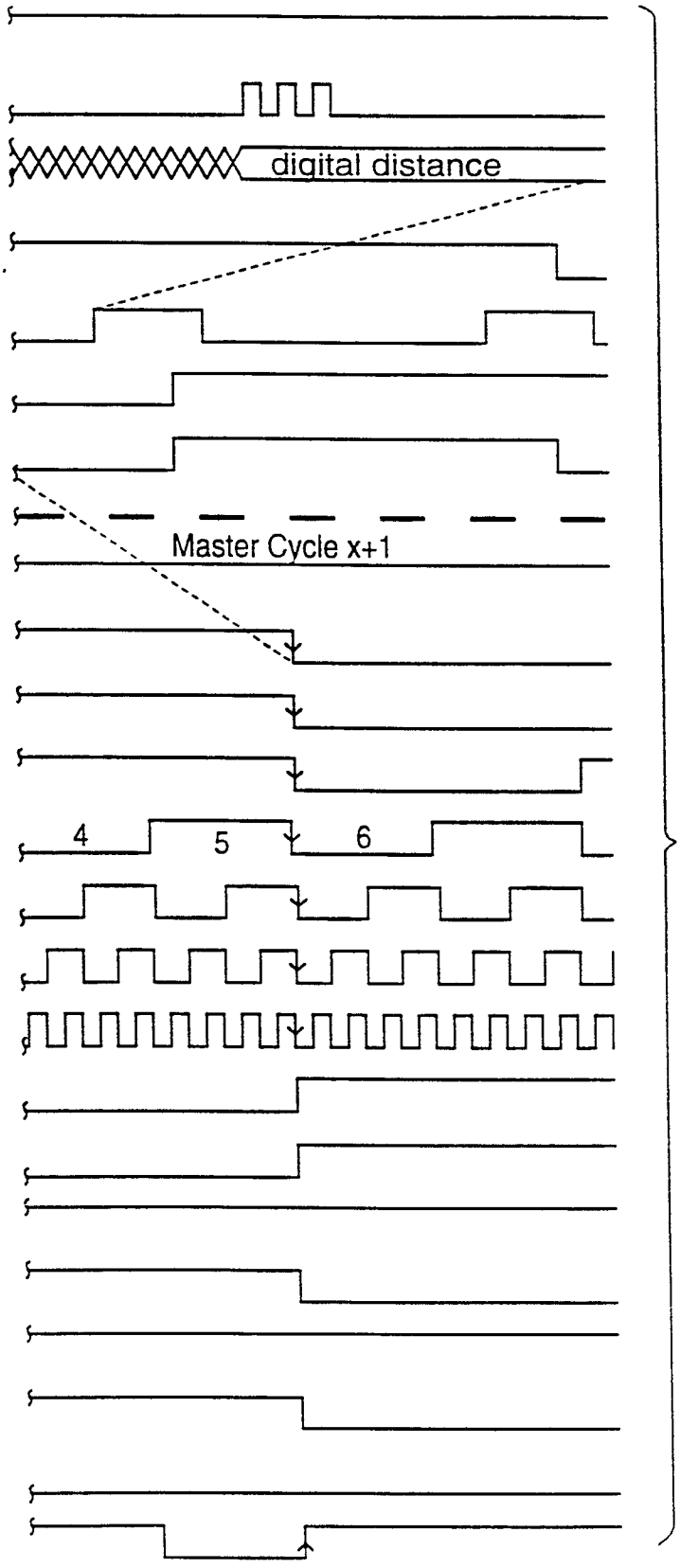

FIG. 7B.

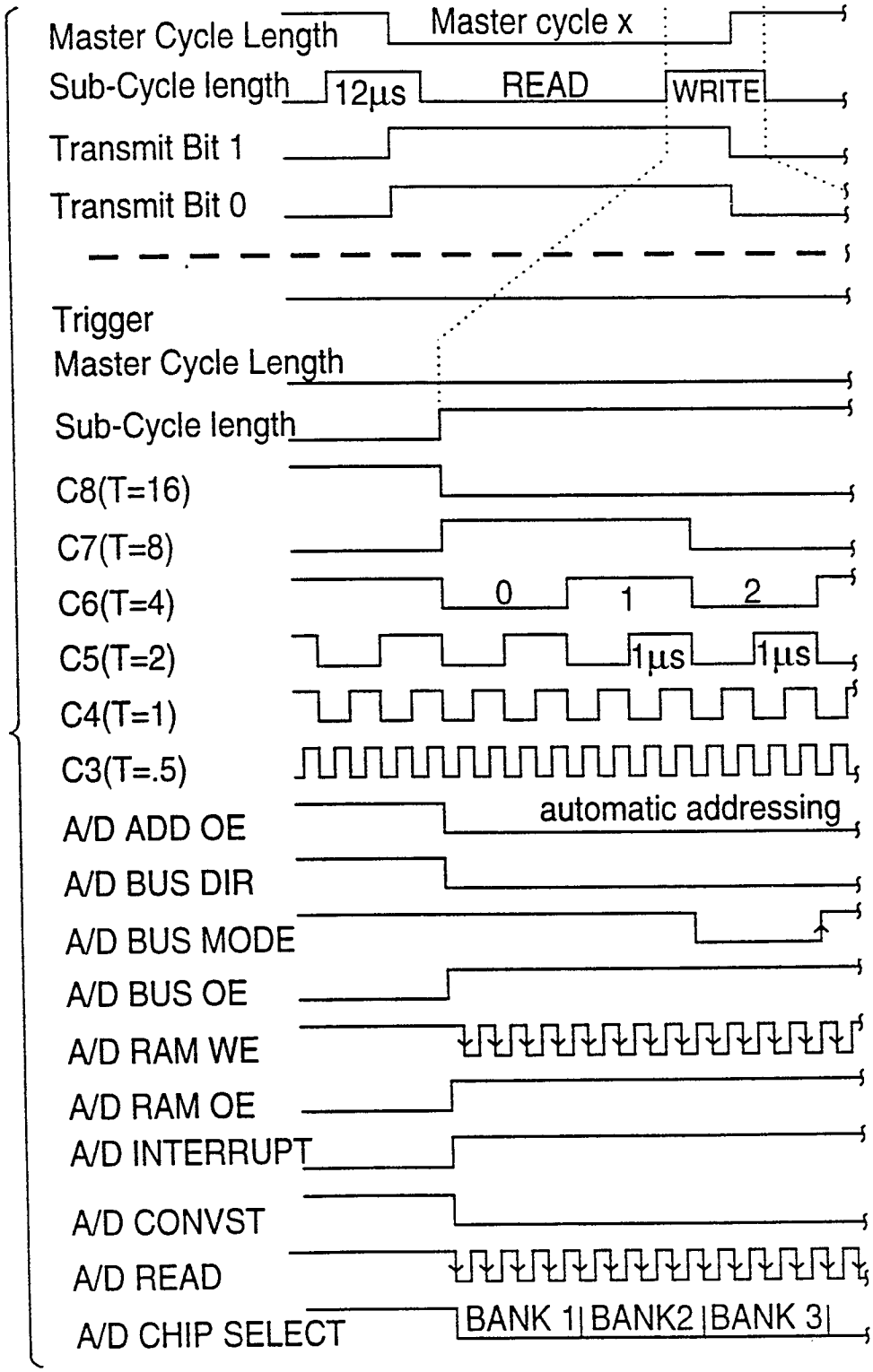
Master Cycle Length
Master cycle x
Sub-Cycle length
12µs
READ
WRITE
Transmit Bit 1
Transmit Bit 0
Trigger
Master Cycle Length
Sub-Cycle length
C8(T=16)
C7(T=8)
C6(T=4)
0
1
2
C5(T=2)
1µs
1µs
C4(T=1)
C3(T=.5)
automatic addressing
A/D ADD OE
A/D BUS DIR
A/D BUS MODE
A/D BUS OE
A/D RAM WE
A/D RAM OE
A/D INTERRUPT
A/D CONVST
A/D READ
A/D CHIP SELECT
BANK 1
BANK2
BANK 3

FIG.8A.

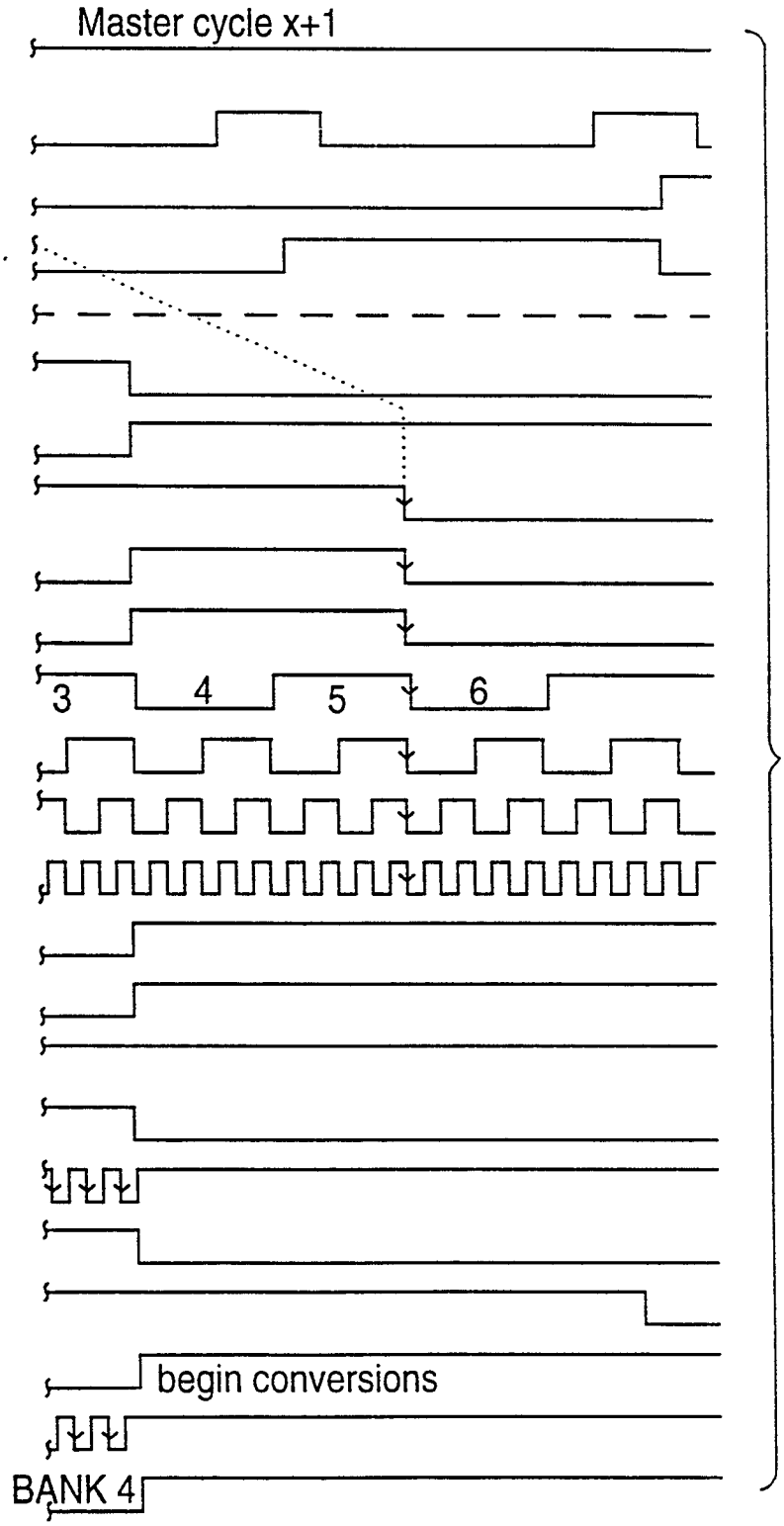

FIG.8B.

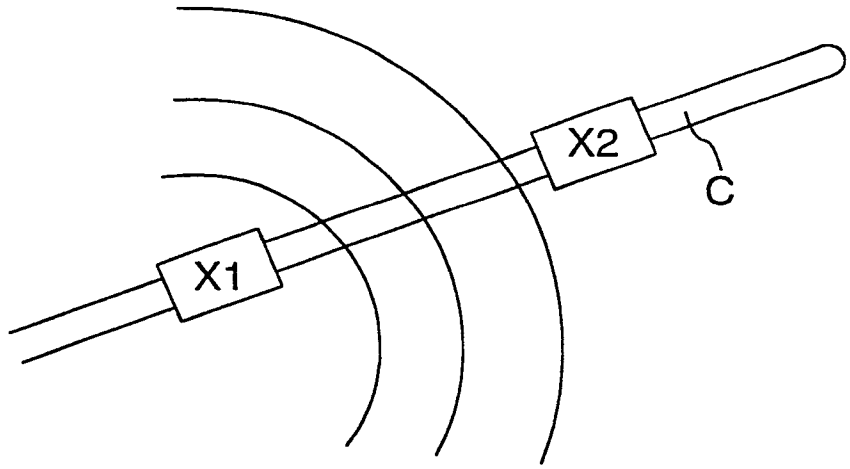

FIG.9.

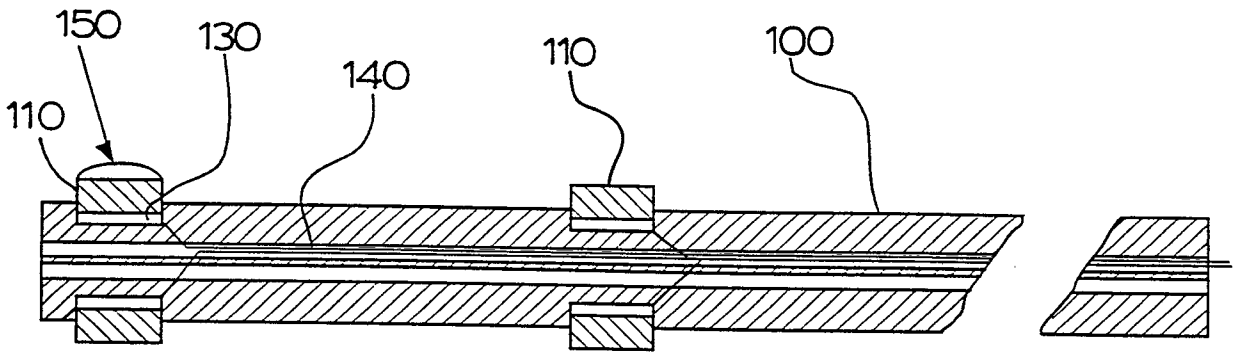

FIG. 10

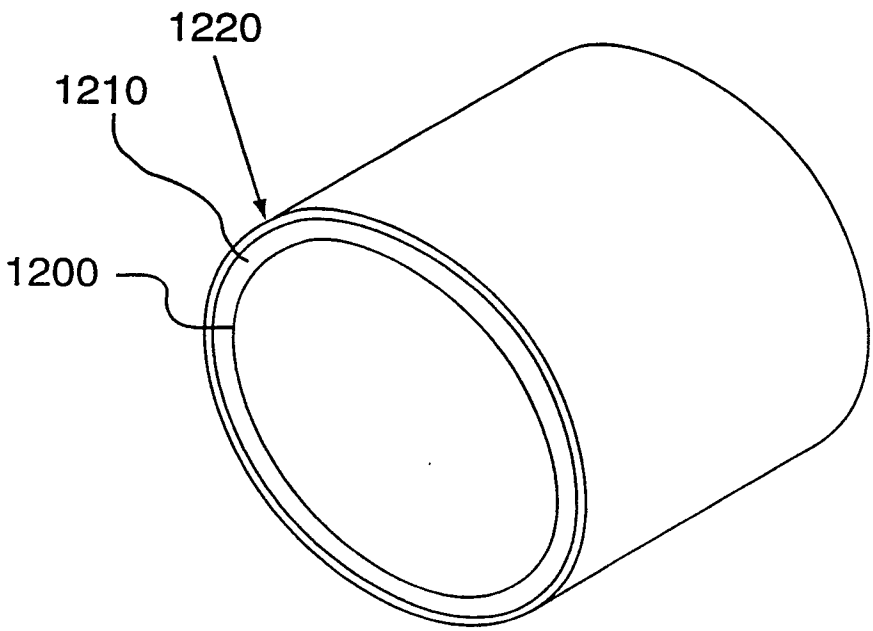

FIG. 12

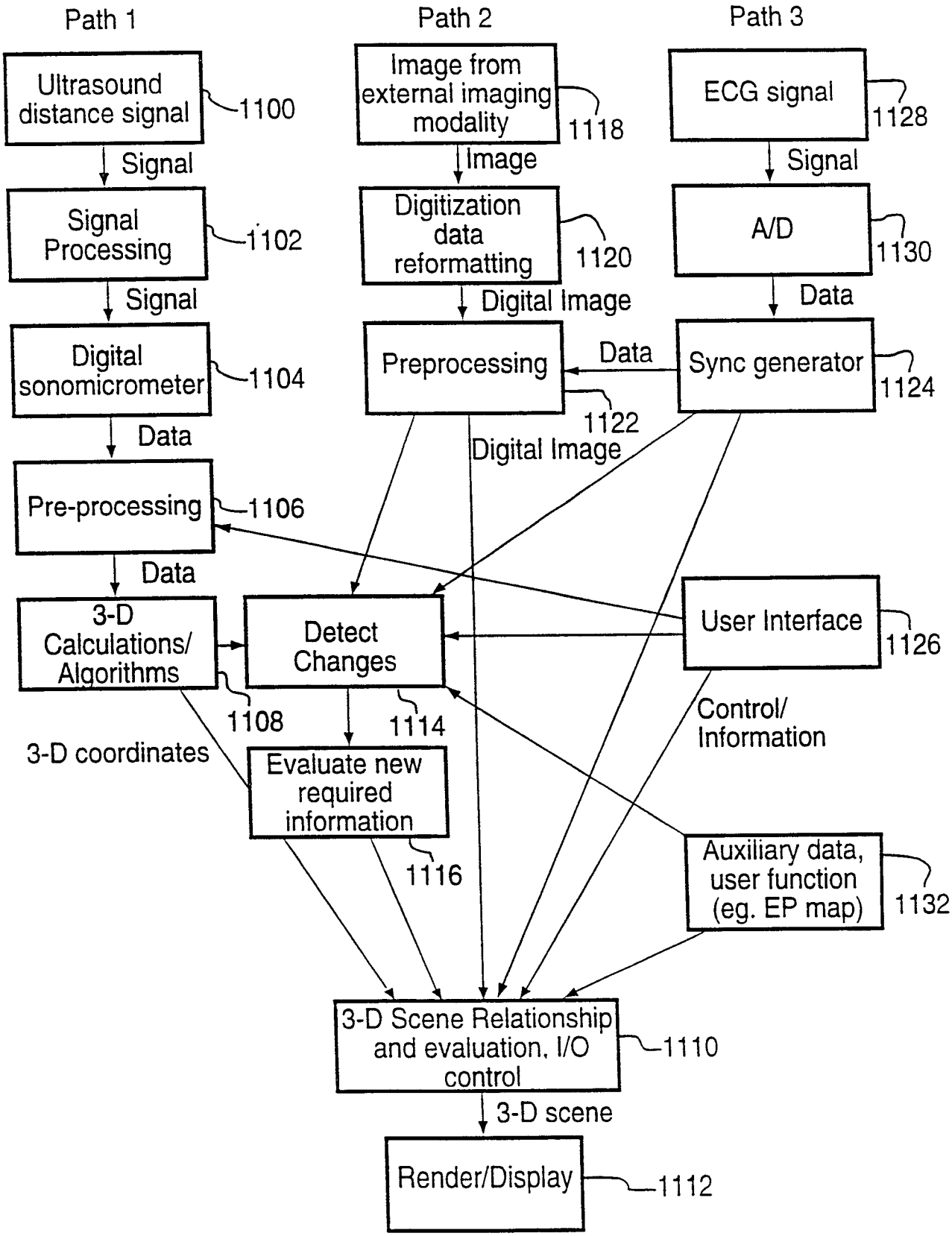
Path 1
Path 2
Path 3
Ultrasound distance signal
1100
Signal
Signal Processing
1102
Signal
Digital sonomicrometer
1104
Data
Pre-processing
1106
Data
3-D Calculations/ Algorithms
1108
3-D coordinates
Image from external imaging modality
1118
Image
Digitization data reformatting
1120
Digital Image
Preprocessing
1122
Digital Image
ECG signal
1128
Signal
A/D
1130
Data
Sync generator
1124
Data
Detect Changes
1114
Evaluate new required information
1116
User Interface
1126
Control/ Information
Auxiliary data, user function (eg. EP map)
1132
3-D Scene Relationship and evaluation, I/O control
1110
3-D scene
Render/Display
1112

FIG. 11

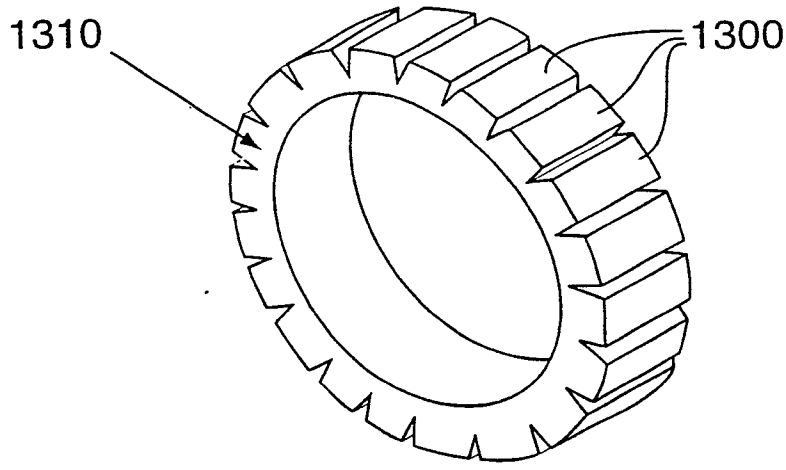

FIG. 13A

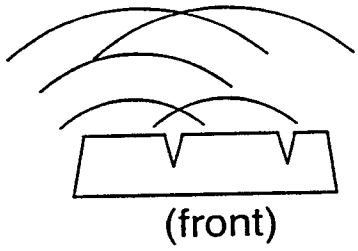

FIG. 13B

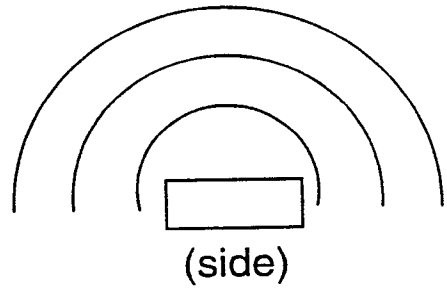

FIG. 13C

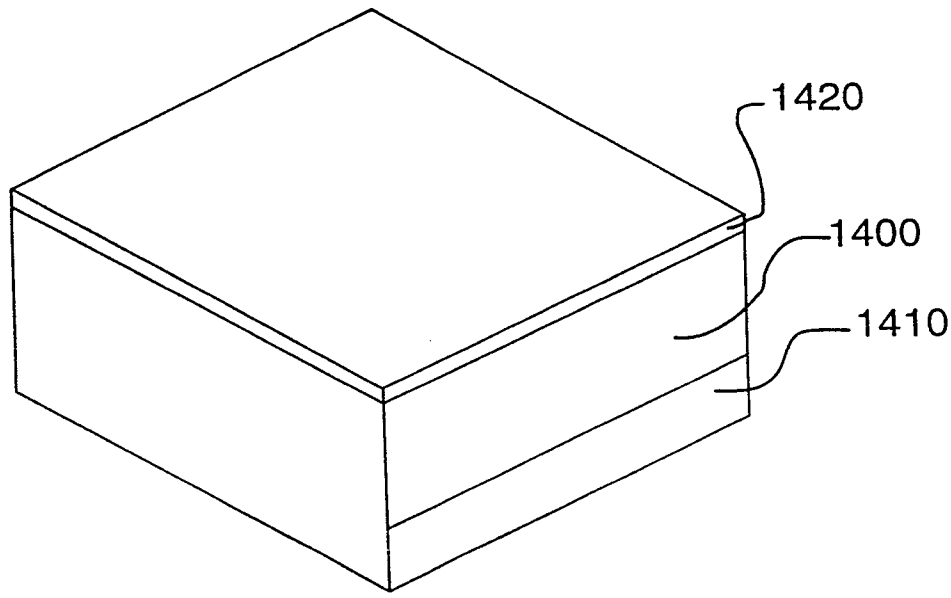

FIG. 14

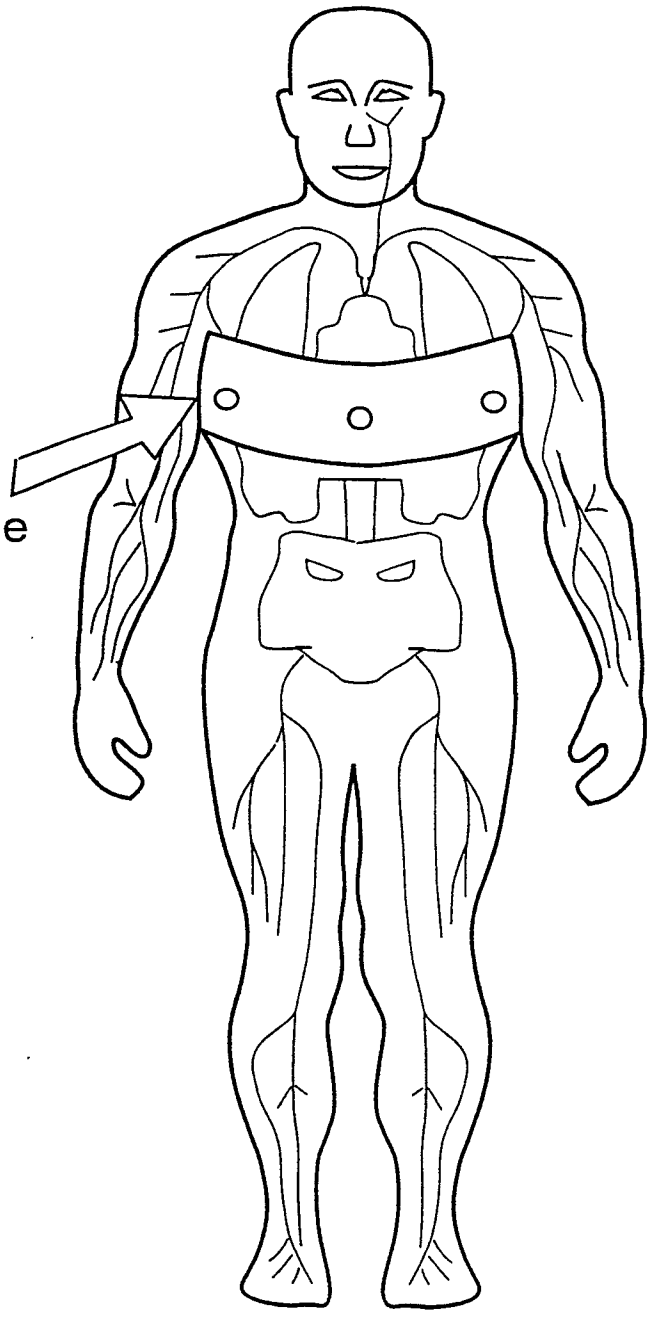

FIG.15.

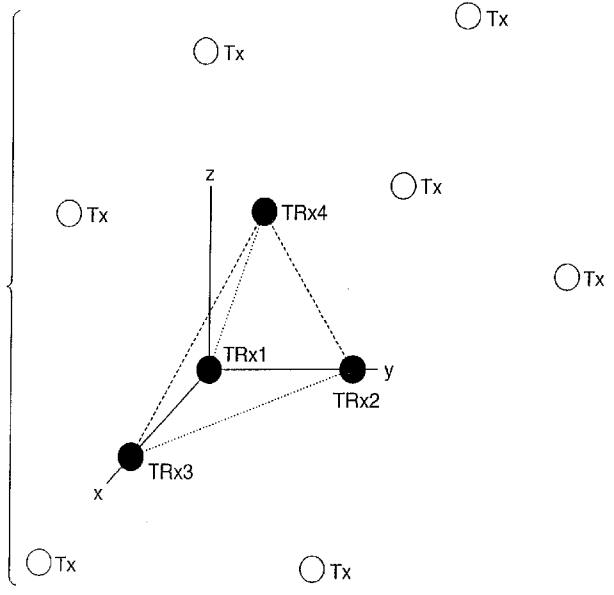
Tx
Tx
Tx
Tx
Tx
z
TRx4
TRx1
y
TRx2
TRx3
x
Tx
Tx