PCT WORLD INTELLECTUAL PROPERTY ORGANIZATION
International Bureau

INTERNATIONAL APPLICATION PUBLISHED UNDER THE PATENT COOPERATION TREATY (PCT)

(51) International Patent Classification 6 : A61F 2/02, A61K 9/00	A1	(11) International Publication Number: WO 96/32076
		(43) International Publication Date: 17 October 1996 (17.10.96)

(21) International Application Number: PCT/US96/05040

(22) International Filing Date: 11 April 1996 (11.04.96)

(30) Priority Data:
08/419,789 11 April 1995 (11.04.95) US

(71) Applicant: BAXTER INTERNATONAL INC. [US/US]; One Baxter Parkway, Deerfield, IL 60015 (US).

(72) Inventors: NEUENFELDT, Steven; 255 S. Stonefence Road, Vernon Hills, IL 60061 (US). CLARKE, Robert; 1771 Cass Court, Libertyville, IL 60048 (US).

(74) Agents: BATES, Sarah, E. et al.; One Baxter Parkway, Deerfield, IL 60015 (US).

(81) Designated States: CA, JP, European patent (AT, BE, CH, DE, DK, ES, FI, FR, GB, GR, IE, IT, LU, MC, NL, PT, SE).

Published
With international search report.
Before the expiration of the time limit for amending the claims and to be republished in the event of the receipt of amendments.

(54) Title: TISSUE IMPLANT SYSTEMS

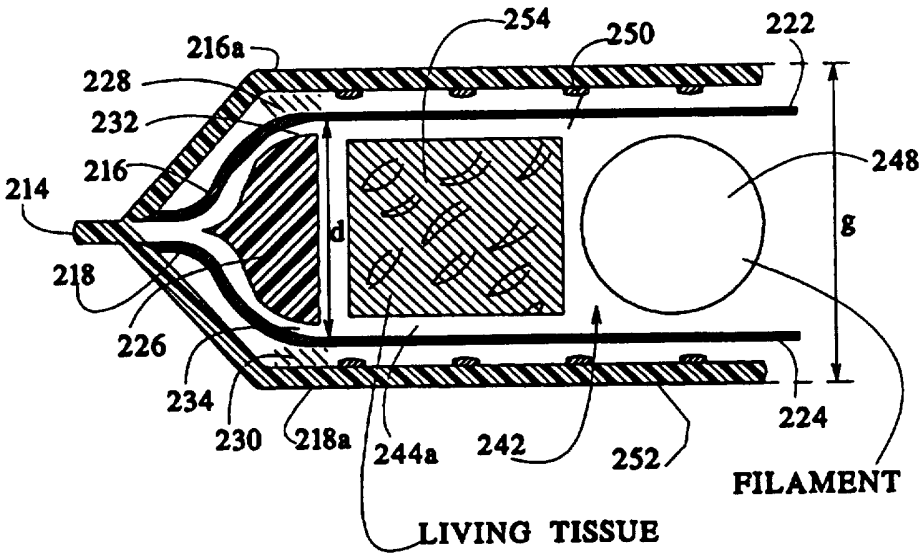

(57) Abstract

A method and apparatus for implanting cells in a host is provided. In an embodiment, an implant assembly (220) for a host tissue is provided including a wall structure which defines a chamber (242) for holding cells for implantation. The wall structure includes at least one membrane layer (222, 224) defining a porous boundary between the host tissue and the implanted cells in the chamber (242). The pore size of the boundary is sufficient to isolate the implanted cells from the immune response of the host tissue. In an embodiment, spacer members (226) are employed to maintain a living tissue cavity having a minimum thickness dimension. External mesh screen structures (250, 252) are also included to define a maximum thickness dimension for the implant cavities defined between two membranes (222, 224).

FOR THE PURPOSES OF INFORMATION ONLY

Codes used to identify States party to the PCT on the front pages of pamphlets publishing international applications under the PCT.

AM	Armenia	**GB**	United Kingdom	**MW**	Malawi
AT	Austria	**GE**	Georgia	**MX**	Mexico
AU	Australia	**GN**	Guinea	**NE**	Niger
BB	Barbados	**GR**	Greece	**NL**	Netherlands
BE	Belgium	**HU**	Hungary	**NO**	Norway
BF	Burkina Faso	**IE**	Ireland	**NZ**	New Zealand
BG	Bulgaria	**IT**	Italy	**PL**	Poland
BJ	Benin	**JP**	Japan	**PT**	Portugal
BR	Brazil	**KE**	Kenya	**RO**	Romania
BY	Belarus	**KG**	Kyrgystan	**RU**	Russian Federation
CA	Canada	**KP**	Democratic People's Republic of Korea	**SD**	Sudan
CF	Central African Republic			**SE**	Sweden
CG	Congo	**KR**	Republic of Korea	**SG**	Singapore
CH	Switzerland	**KZ**	Kazakhstan	**SI**	Slovenia
CI	Côte d'Ivoire	**LI**	Liechtenstein	**SK**	Slovakia
CM	Cameroon	**LK**	Sri Lanka	**SN**	Senegal
CN	China	**LR**	Liberia	**SZ**	Swaziland
CS	Czechoslovakia	**LT**	Lithuania	**TD**	Chad
CZ	Czech Republic	**LU**	Luxembourg	**TG**	Togo
DE	Germany	**LV**	Latvia	**TJ**	Tajikistan
DK	Denmark	**MC**	Monaco	**TT**	Trinidad and Tobago
EE	Estonia	**MD**	Republic of Moldova	**UA**	Ukraine
ES	Spain	**MG**	Madagascar	**UG**	Uganda
FI	Finland	**ML**	Mali	**US**	United States of America
FR	France	**MN**	Mongolia	**UZ**	Uzbekistan
GA	Gabon	**MR**	Mauritania	**VN**	Viet Nam

SPECIFICATION

TITLE

TISSUE IMPLANT SYSTEMS

Cross-Reference to Related Applications

This application is a continuation-in-part of copending U.S. Application Serial No. 08/179,860 filed January 11, 1994 and entitled: "Ported Tissue Implant Systems and Methods of Using Same", which is a continuation-in-part of U.S. Application Serial No. 07/933,871 entitled: "Close Vascularization Implant Material" filed August 21, 1992, which is a continuation-in-part of U.S. Application Serial No. 07/735,401 filed July 24, 1991, abandoned, which is a continuation-in-part of U.S. Application Serial No. 07/606,791 entitled: "Membrane for Vascularization of Foreign Body Capsule" filed October 30, 1990, abandoned.

Field of the Invention

The inventions relate to systems and methods for implanting living cells within a host.

Background of the Invention

For several years, researchers have been trying to surgically implant living cells in a host to treat various cell and molecular deficiency diseases. In theory, the implanted cells will generate biological products that the host, because of disease or injury, cannot produce for itself. For example, the implant assembly can contain pancreatic cells (clusters of which are called "islets"), which generate insulin that a diabetic host lacks.

Yet, in practice, conventional implant assemblies and methodologies usually fail to keep the implanted cells alive long enough to provide the intended therapeutic benefit. For example, pancreatic cells implanted for the treatment of diabetes usually die or become dysfunctional within a few days or weeks after implantation.

For a period after implantation, the region of the host tissue next to the implant assembly can be characterized as ischemic. "Ischemic" means that there is not a

sufficient flow of blood in the tissue region closely surrounding the implant assembly. Usually, this ischemic condition exists during the first two weeks of implantation. Most implanted cells fail to live through this period.

During the ischemic period, a foreign body capsule forms around the implanted cells. The capsule consists of flattened macrophages, foreign body giant cells, and fibroblasts. Conventional hypotheses blame the foreign body capsule for causing implanted cells to die or become dysfunctional during the ischemic period.

It has been discovered that these widely held hypotheses are wrong; the cells do not die because of the intervention of the foreign body capsule. Instead, the cells die because conventional implant assemblies and methodologies themselves lack the innate capacity to support the implanted cells' ongoing life processes during the critical ischemic period, when the host's vascular structures are not nearby. Because of this, the implanted cells perish before the host can grow new vascular structures close enough to sustain them.

When implanted cells die during the ischemic period, a classical foreign body capsule inevitably forms around the implant. The persistent presence of this capsule led previous researchers to the false conclusion that the host's foreign body reaction was the cause of implanted cell death, rather than its result.

The invention corrects these and other problems in existing implant assemblies and methodologies.

Many previous implant assemblies have also failed to be useful in a clinical setting, because they cannot be practically implanted and tolerated by the host without danger or discomfort.

For example, an implant assembly that housed cells within hollow fibers was recently used by CytoTherapeutics

to successfully treat diabetes in rats. The assembly consisted of 7 fibers, each being 2 cm long and 0.073 cm in diameter. The pancreatic cells were present within the fibers at a density of about 25,000 cells per cm^3. For this assembly to be clinically useful for the treatment of diabetes in humans, it would have to contain at least about 250,000 pancreatic islets (each islet contains about 1000 cells). This means that, to hold enough pancreatic cells to treat human diabetes, the assembly would have to be about 117 feet long. This makes the assembly unusable for clinical use in humans.

Recently, cells have also been encapsulated in tiny hydrogel vessels, called microcapsules. These tiny vessels cannot be implanted within the host's soft tissues, because they lack the physical strength to withstand the physiological stresses normally encountered close to the host tissue. Instead, the microcapsules are suspended in a free floating state within a solution that is infused into the host's peritoneal cavity.

In reality, the microcapsules have only limited clinical application. Not all persons can tolerate their injection free of danger or discomfort. Microcapsules are non-adhesive, and they do not stick to organs. Instead, they settle in large masses at the bottom of the peritoneal cavity. And, if implanted directly within the host's tissue, the microcapsules will rupture, and the contained cells would perish. For these reasons, microcapsules fail to provide a widely usable clinical solution to the problems surrounding the therapeutic implantation of cells.

Biocompatible materials must be used to provide useful implant assemblies and sometimes these materials present their own set of problems. More particularly, polytetrafluoroethylene (PTFE)-containing materials are desirable for making implant assemblies or devices because they are relatively inert and well tolerated by most host

organisms. These PTFE and PTFE-containing materials are difficult to bond together into assembled structures.

Bonding of two PTFE-containing membranes or structures by ultrasonic welding or the like is generally unsatisfactory. Adhesive bonding methods sometimes do not have the bond strength required and the cost of the adhesives and applicators undesirably adds to the overall price of implant products.

Summary of the Invention

The present invention provides an implant assembly comprising an implantable body formed of two spaced apart membrane layers coupled together to define a chamber for holding living cells. In an embodiment, the membranes are coupled together along their peripheral edges with a peripheral seal. The peripheral seal cooperatively secures the first and second membranes together. The implantable body defines an inner chamber between the edge-sealed membranes for holding living cells for implantation.

In an embodiment, the peripheral edge seal is formed of a melt fusible thermoplastic polymer overmolded to the membranes along their respective edges to form the implantable body.

In an embodiment, the peripheral edge seal is formed of a melt fusible thermoplastic polymer that seals the membranes together in part, by flowing therethrough.

In an embodiment, means for creating a tissue cavity in the chamber are provided. More particularly, in accordance with this embodiment, at least one spacer member is disposed in the chamber intermediate the first and second membranes. The spacer member may be a ring, an arm, or one or more filaments positioned in the chamber. The spacer members are generally effective to define and maintain a minimum thickness dimension for the chamber and thereby define a tissue cavity between the first and second membranes.

In an embodiment, the spacer members may also be cooperatively mechanically coupled to either the first membrane, the second membrane, or both.

In an embodiment, the implant assembly is also provided with means for defining a minimum and maximum thickness dimension for the chamber. In accordance with this embodiment, an outer relatively rigid mesh layer is disposed on the implant body adjacent the outside surfaces of the membrane layers opposite the chamber. The more rigid outer mesh layer provides additional structural support to the implant assembly and assists in maintaining the minimum thickness dimension on implantation, for example, by preventing undesirable folding or collapse of the tissue cavity. The mesh also limits outward expansion of the membrane-bounded tissue cavity to prevent undesired pillowing and rupture on filling. The mesh and the membranes may include angiogenic materials to stimulate the growth of vascular structures by the surrounding host tissue close to the porous membrane and mesh boundaries.

Additionally, the present invention provides a method for coupling first and second membrane layers together to define an implant body having an inner chamber therebetween for holding living cells. In accordance with an embodiment, the membrane layers are contacted with a heat fusible thermoplastic polymer material. The assembly is heated causing the polymer to flow. The melt fusible polymer melts together and into pores and spaces of the membranes. Upon cooling, a cooperative mechanical engagement is provided between the membrane layers.

In an embodiment, spacer members are employed which also comprise melt-fusible polymer materials. Melt fusion of these spacer members may also be used to securely couple the membrane layers. In this case, the membranes are coupled along their peripheral edge portions and also along central regions thereof in the chamber region.

Other features and advantages of the present invention will become apparent from the following Detailed Description taken in conjunction with the Drawings, in which:

Brief Description of the Drawings:

Fig. 1 is a perspective view of an implant assembly that embodies the features of an embodiment of the invention being held in the hand of a practitioner;

Fig. 2 is an enlarged perspective view of the implant assembly shown in Fig. 1;

Fig. 3 is an enlarged and exploded perspective view of the implant assembly shown in Fig. 2;

Fig. 4 is a side section view of the implant assembly taken generally along line 4-4 in Fig. 2;

Fig. 5 is an enlarged and exploded perspective view of another implant assembly that embodies the features of the invention, showing the practitioner loading implanted cells into the assembly;

Fig. 6 is an enlarged assembled view of the assembly shown in Fig. 5, before the formation of a peripheral seal;

Fig. 7 is an enlarged view of the assembly shown in Fig. 6, partially peeled apart to show the interior;

Fig. 8 is an enlarged assembled view of the assembly shown in Fig. 5 after the formation of a peripheral seal;

Fig. 9 is a side section view of a portion of the sealed assembly taken generally along line 9-9 in Fig. 8;

Fig. 10 is a side section view of the assembly before sealing, taken generally along line 10-10 in Fig. 6;

Fig. 11 is a perspective view of a lamination slide holding the bottom layer of the laminated boundary structure that embodies the features of the invention;

Fig. 12 is a side section view of the lamination slide taken generally along line 12-12 in Fig. 11;

Fig. 13 is a perspective view of several lamination slides laid side by side for the application of adhesive

filaments in the process of making the laminated boundary structure;

Fig. 14 is a side section view of the laminated boundary structure with its top layer laid over the cement filaments applied in Fig. 13;

Fig. 15 is a side section view of the laminated boundary structure clamped between two lamination slides while the cement filaments cure;

Fig. 16 is a perspective view of individual boundary wall elements being cut from the laminated structures made following the steps shown in Figs. 11 to 15;

Fig. 17 is a diagrammatic depiction of an embodiment of the implant assembly that embodies the features of the invention after having been surgically implanted in host tissue;

Fig. 18 is a diagrammatic depiction of an embodiment of the implant assembly during the ischemic period, after about one or two days of implantation, showing the surrounding wound area filled with exudate;

Fig. 19 is a diagrammatic depiction of the implant assembly after about two weeks of implantation, showing the formation of vascular structures close to the boundary, ending the ischemic period;

Fig. 20 is a diagrammatic depiction of a section of the implant assembly in which the implanted cells have survived the ischemic period, showing the formation of vascular structures close to the boundary and the resulting alteration of the foreign body capsule;

Fig. 21 is a diagrammatic depiction of a section of the implant assembly in which the implanted cells have not survived the ischemic period, showing the lack of vascular structures close to the boundary and the resulting intervention of the foreign body capsule;

Fig. 22 is a graph showing the therapeutic loading curve for pancreatic cells derived in accordance with the invention;

Fig. 23 illustrates schematically an embodiment of a ported implant assembly of the present invention;

Fig. 24 illustrates a cross-sectional view of the assembly of Fig. 23 along lines XXIV-XXIV thereof;

Fig. 25 illustrates another embodiment of a ported assembly of the present invention;

Fig. 26 illustrates an embodiment of the present invention that provides two ported implant assemblies coupled together;

Fig. 27a-27c illustrates schematically the use of an embodiment of the present invention including a number of ported implanted assemblies;

Fig. 28 illustrates another embodiment of a ported assembly of the present invention;

Fig. 29 illustrates a further embodiment of the assembly of the present invention;

Fig. 30 illustrates a cross-sectional view of the assembly of Fig. 29 taken along lines XXX-XXX;

Fig. 31 illustrates a cross-sectional view of the assembly of Fig. 29 taken along lines XXXI-XXXI;

Fig. 32 illustrates a cross-sectional view of the assembly of Fig. 29 taken along lines XXXII-XXXII;

Fig. 33 is a schematic elevated fragmentary cross-sectional view of another embodiment of an implant assembly of the present invention illustrating an edge-sealed implant body provided with a filament spacer member;

Fig. 34 is a schematic elevated fragmentary cross-sectional view of another embodiment of an implant assembly of the present invention illustrating the laminated structure of the peripheral side seals including an intermediate spacer;

Fig. 35 is a top plan view of an alternate spacer member for use in an implant assembly of the present invention including a projecting spacer arm which effectively subdivides the interior portion into a pair of tissue-receiving sub-chamber units;

Fig. 36 is a top plan view of an alternate spacer member of the present invention including filaments disposed between the opposed portions of the spacer member and effectively subdividing the interior portion into a plurality of tissue-receiving sub-chamber regions;

Fig. 37 is a schematic fragmentary elevated cross-sectional view of another embodiment of an implant assembly of the present invention including peripheral ring and filament spacer members and an outer mesh member for maintaining a defined tissue receiving cavity;

Fig. 38 is a micrograph of a membrane material;

Fig. 39 is a micrograph of the membrane material of Fig. 38 at a different magnification;

Fig. 40 is a micrograph of the membrane material of Fig. 38 at a different magnification;

Fig. 41 is a micrograph of another membrane material;

Fig. 42 is a micrograph of the membrane material of Fig. 42 at a different magnification; and

Fig. 43 is a micrograph of still another membrane material.

Before explaining the preferred embodiments, it is to be understood that the inventions are not limited in use to the details of construction or methodologies there set forth or as illustrated in the drawings. The inventions are capable of other embodiments and of being practiced and carried out in various ways.

Description of the Presently Preferred Embodiments:

Figs. 1 to 4 show an implant assembly 10 that generally embodies features of the invention.

The assembly 10 can carry preselected types of living cells 12 for implanting within the soft tissue of a host. The implanted cells 12 generate biological products that the host, because of disease or injury, cannot produce for itself.

For example, the implant assembly 10 can carry clusters of pancreatic cells (called "islets"), which generate insulin for release into and use by a diabetic host.

The assembly 10 forms a porous, life sustaining boundary between the implanted cells 12 and the host. The porous boundary isolates the implanted cells 12 from attack and destruction by certain biological mechanisms of the host. At the same time, the porous boundary associates with the host's biological system closely enough to transfer nutrients and wastes in support of the biological processes of the implanted cells 12. The porous boundary also transfers the therapeutic products generated by the implanted cells 12 to the host.

In the embodiment shown in Figs. 1 to 4, the assembly 10 includes a hoop-like housing 11. The housing 11 includes a first hoop element 14 and a second hoop element 16 that nests within the first hoop element 14. The assembly 10 also forms a cell chamber 18 within the hoop-like housing 11.

The first hoop element 14 has an upstanding cylindrical side wall 20 that peripherally defines an open area. First and second central openings 22 and 24 lead into the open area. The first central opening 22 is smaller than the second central opening 24. This forms an interior step or ledge 26 next to the first opening 22.

The second hoop element 16 also has a central opening 28. The second hoop element 16 has an outer diameter that is slightly greater than the inner diameter of the open area of the first hoop element 14. The peri-

pheral edge of the second central opening 16 contains a slight chamfer 30 to receive the second hoop element 16. When assembled, the second hoop element 16 nests snugly in an interference press fit within the open area of the first hoop element 14 (see Fig. 2).

The first hoop element 14 and the second hoop element 16 are made of a durable biocompatible ceramic or metallic material, like titanium. Like titanium, the selected material should also preferably be subject to detection within the host tissue by fluoroscopy, x-ray, and the like.

The specific dimensions of the hoop-like housing 11 may vary according to its intended use and the volume of cells 12 it contains.

In one preferred embodiment, the side wall of the first hoop element 14 is about .055 inch in height and has an outer diameter of about .375 inch. The open area has an inner diameter of about .325 inch where it joins the inner edge of the chamber 30 of the second central opening 24. The second central opening 24 has an inner diameter of about .326 inch around the outer edge of the chamfer 30. The first central opening 14 has an inner diameter of about .275 inch and a depth of about .015 inch, where it joins the interior ledge 26.

In this embodiment, the associated second hoop element 16 has a height of about .025 inch; an outer diameter of about .326; and an inner diameter (for its central opening 28) of about .250 inch. The range of interference necessary to snugly join the second hoop element 16 within the first hoop element 14 will of course depend upon the nature of the materials selected.

The chamber includes a first porous wall element 32, a second porous wall element 34, and a sealing gasket or ring 36 that is sandwiched between them. The sealing ring 36 is made of a mesh polyester material.

The wall elements 32 and 34 and sealing ring 36 are sized to fit snugly within the confines of the hoop-like housing 11. And, as will be described in greater detail later, at least one (and preferably both) porous wall elements 32 and 34 have certain physical characteristics selected to protect and sustain the viability of the cells 12 within the host.

The ring 36 has a central open region 38. The open ring region 38, together with the overlying first and second porous wall elements 32 and 34, create the chamber 18 to hold the implanted cells 12 (see Fig. 4).

In making the assembly 10 shown in Figs. 1 to 4, the practitioner lays one wall element 32 onto the ledge 26 formed in the first hoop element 14. The practitioner then lays the sealing ring 36 upon the wall element 32. Next, the practitioner inserts the desired amount of cells 12 to be implanted into the open region 38 of the ring 36. The amount of implanted cells 12 is sufficient to induce the expected therapeutic response in the host.

The practitioner next lays the other wall element 34 over the first wall element 32, sealing ring 36, and inserted cells 12. To complete the assembly 10, the practitioner presses the second hoop element 16 through the second central opening 24 into pressing engagement against the adjacent wall element 34. This seals the periphery of the cell holding chamber 18, which now snugly rests within the open area of the hoop-like housing 11.

Once assembled, one wall element 32 rests against the interior ledge 26 and is there exposed through the first central opening 22. The other wall element 34 rests against the second hoop element 16 and is there exposed through its central opening 28.

Figs. 5 to 10 show another implant assembly 10' that embodies features of the invention. Like, the implant assembly 10 previously described, the assembly 10' includes

a cell chamber 18' formed by first and second porous wall elements 32' and 34' and an intermediate sealing ring 36'.

Unlike the first described implant assembly 10, the assembly 10' does not rely upon the hoop-like housing 11 to hold and seal the chamber 18'. Instead, a preformed peripheral weld 40 bonds and seals the edges of the porous wall elements 32' and 34' to the interior ring 36'.

In making the assembly 10' shown in Figs. 5 to 10, the practitioner lays the sealing ring 36' upon one wall element 32' and inserts the desired amount of cells 12 to be implanted into the open region 38' of the ring 36' (see Fig. 5). The practitioner overlays the other wall element 34' (as Fig. 6 shows). The practitioner then forms the weld 40 to seal the peripheral edges of the first and second wall elements 32' and 34' to the ring 36' (as Fig. 8 shows). The weld compresses the peripheral edge of the assembly 10' together, as Fig. 9 shows.

The practitioner selects a sealing technique that does not damage the cells 12 within the chamber 18'. For example, the inventors find that sonic welding can be used without damage to the inserted tissue cells.

In a preferred embodiment (using the laminated structure 72 made as shown in Figs. 11 to 16, as will be described later), the practitioner uses a Branson sonic welder. The welder is operated at 40 Khz, with 941AES actuator, 947 m power supply, and 91 C power controller. The horn amplitude is about 1.4 mils and is operated at a hold time of about 0.3 seconds; a weld time of about .20 seconds; a pressure of about 50 PSI; a trigger force of about 20 pounds; and a down speed of about 1.25 (machine setting).

These are typical operating ranges for making the sonic weld and can vary according to the materials used and degree of cell loading within the chamber.

The integral assembly 10' formed in this manner can be implanted directly within host tissue, without use of an exterior housing.

Preferably, as Fig. 8 shows, the assembly 10' includes an attached clip 42 made of a material that can be detected within the host tissue by fluoroscopy, x-ray, and the like. In this way, the practitioner can easily locate the assembly 10' within the host, if required.

Like the first described embodiment, the specific dimensions of the assembly 10' may vary according to its intended use. And, like the first described embodiment, at least one (and preferably both) porous wall elements 32' and 34' have certain physical characteristics selected to protect and sustain the viability of the cells within the host.

Regardless of the assembly used, the practitioner surgically implants it in the soft tissue 44 of the host (see Fig. 17). During surgery, the practitioner positions the assembly 10 so that the exposed first and second wall elements 32 and 34 rest close to the surrounding host tissue 44. In Figs. 17 to 21, assembly 10 also encompasses assembly 10'.

The first and second wall elements 32 and 34 thereby together form the desired boundary 46 between the biological system of the host tissue 44 living outside the chamber 18 and the biological system of the implant tissue cells 12 living within, the chamber 18.

For a period of time after implantation, the region of the host tissue 44 immediately surrounding the implant assembly 10 is ischemic (see Fig. 18). The region is ischemic, because the host treats the assembly 10 as a foreign body.

The host forms a wound area 48 around the assembly 10 (see Fig. 18). The wound area 48 has spaces that become

filled with wound exudate 50. The wound exudate 50 keeps this area 48 ischemic.

Soon after implantation, host inflammatory cells enter and occupy the exudate area 48. "Inflammatory cells" include macrophages, foreign body giant cells, and fibroblasts.

The inflammatory cells try to remove the foreign implant assembly. Macrophages from the host try to ingest the foreign implant assembly 10. In some cases, the macrophages coalesce to form multinucleated giant cells. Fibroblast layers form to create a fibrous sac of cells and collagen around the foreign implant assembly 10, commonly called the foreign body capsule 52 (see Fig. 20).

The inventors have discovered that it is not the foreign body capsule 52 that most threatens the viability of the implanted cells during the ischemic period. Rather, the existence of the cells is most threatened during the ischemic period when the boundary 46 itself fails to allow enough extracellular nutrients like glucose and other metabolic support compounds present at the boundary 46 to pass to the cells. Without metabolic support, the implanted cells become dysfunctional or perish.

As Fig. 18 shows, the wound exudate 50 forms a fluid barrier between the vascular system of the host and the boundary 46. This barrier hinders the extracellular passage of nutrients from the host vascular system to the boundary 46. The concentrations of nutrients decrease as they transit the exudate barrier to reach the boundary 46.

The host's inflammatory cells that in time enter the wound exudate region 50 also create a metabolic sink. These cells compete for and further extract more of the host's extracellular nutrients before they reach the boundary.

If the host is stimulated to grow new vascular structures 54 close to the boundary 46, host endothelial cells will also enter the region 48. These cells begin the

crucial process of forming the new vascular structures 54. Still, their presence further contributes to the metabolic sink effect. The host's endothelial cells further reduce the availability of nutrients for the implanted cells.

The ischemic period will end, if enough neovascular structures 54 from the host grow within the exudate region 50 close to the boundary 46 of the assembly 10 (as Figs. 19 and 20 show). The close vascular structures 54 shorten the extracellular path that nutrients must travel to reach the boundary 46. The close vascular structures 54 provide nutrients in higher concentrations to the implanted cells. Close vascularization also transports the therapeutic products generated by the implanted cells 12 to the host.

However, all these desired benefits accrue only if the implanted cells 12 survive the critical ischemic period.

The inventors have discovered that the diminished concentrations of nutrients present at the boundary 46, although significantly reduced by the exudate barrier and metabolic sink effects, are still enough to sustain the implanted cells. This is true, even in the presence of a foreign body capsule.

Still, the cells will die, if the boundary 46 itself lacks the capacity to let enough of the remaining nutrients through to the cells at a sufficiently high rate. The inventors refer to this capacity as the metabolic transit value.

The inventors have discovered that the boundary 46 itself can also present another significant barrier to the passage of nutrients. The added barrier effect of the boundary 46 can further reduce the already diminished concentration of nutrients, until there is essentially nothing left to sustain the cells.

The series barriers to the extracellular passage of nutrients (the wound exudate 50, the boundary 46, and the

metabolic sink effect) also inhibit the reverse passage metabolic wastes from the implanted cells.

The inventors have discovered that two principal factors threaten the survival of the implanted cells during the ischemic period. The first factor (which is conventionally recognized) is the failure to isolate the cells from the natural immune response of the host. The second factor (which is not conventionally recognized) is the undesirable additional barrier effect of the boundary 46 that impedes the essential flux of already scarce nutrients to the implanted cells before close vascularization fully develops. The same barrier effect impedes the flux of metabolic waste products away from the implanted cells to the host.

If the boundary 46 does not support the ongoing metabolic processes of the implanted cells while isolating them from the immune response of the host during the ischemic period, the implanted cells will not live long enough to derive the benefits of close vascularization, if it occurs.

According to this aspect of the invention, then, the porous boundary 46 is characterized in terms of its pore size; its ultimate physical strength; and its metabolic transit value. The first two characteristics serve to isolate the implant tissue cells from the immune response of the host. The last characteristic serves to transfer nutrients and waste products in support of the metabolic processes of implanted cells during the ischemic period, before close vascularization occurs. The last characteristic sustains the viability of the implanted cells during the ischemic period, even as a foreign body capsule forms.

According to another aspect of the invention, the assembly also includes an angiogenic material. The presence of an angiogenic material stimulates the neovas-

cularization required close to the boundary 46 to bring an end to the ischemic period.

According to yet another aspect of the invention, the porous boundary 46 includes an interface 47 with the host tissue that is characterized by a conformation that supports and fosters the growth of vascular structures by the host close to the boundary 46.

Further details of the beneficial characteristics of the boundary 46 and its associated host interface 47 will now be individually described.

Boundary Pore Size

The boundary 46 has a pore size sufficient to isolate the implant tissue cells from the immune response of the host.

As used in this Specification, "pore size" refers to the maximum pore size of the material. The practitioner determines pore size using conventional bubble point methodology, as described in Pharmaceutical Technology, May 1983, pages 36 to 42.

As a threshold requirement, the pore size selected must make the boundary 46 impermeable to the vascular structure that forms close to the boundary 46. Penetration of the pores by the vascular structure breaches the integrity of the boundary 46, exposing the implanted cells to the complete immune response of the host. Generally speaking, pore sizes less than about 2 microns will block the ingress of vascular structures.

The ultimate pore size selected also depends upon the species of the host and the biologic relationship between the host and the donor of the implant tissue cells.

When the implanted cells are from another animal species (i.e., xenografts), the pore size must be sufficient to prevent the passage of both inflammatory cells and molecular immunogenic factors from the host into the implant tissue chamber. As used in this Specification,

"molecular immunogenic factors" refers to molecules such as antibodies and complement.

Pore sizes sufficient to block passage of both inflammatory cells and molecular immunogenic factors in humans lie in the range of about .015 micron. Of course, these pore sizes are also impermeable to vascular structures.

When the implanted cells are from the same animal species but having a different genetic make up (i.e, allografts), the pore size usually must be sufficient to prevent the passage of only inflammatory cells from the host into the implant cell chamber. In allografts, molecular immunogenic factors do not seem to adversely affect the viability of the implanted cells. Still, some degree of tissue matching may be required for complete protection.

Pore sizes sufficient to block passage of inflammatory cells in humans lie in the range of below about 0.8 micron. These pore sizes, too, are impermeable to vascular structures.

When the implanted cells are isografts (autologous implants of genetically engineered cells), the pore size must be sufficient only to prevent the isografts from entering the host. Still, with isografts, the pore size selected must also prevent ingress of vascular structures.

Boundary Strength

The boundary 46 has an ultimate strength value that is sufficient to withstand, without rupture, the growth of new vascular structures, the growth of new cells within the chamber 18/18', and other physiological stresses close to the host tissue. Keeping the boundary 46 secure assures isolation of the implanted cells from both the immunogenic factors and inflammatory cells of the host.

These physiological stresses are caused when the host moves about in carrying out its normal life functions.

The proliferation of implanted cells and the growth of vascular structures 54 also contributes to the physiological stresses close to the boundary 46. The stresses challenge the physical integrity of the boundary 46 by stretching or otherwise deforming it.

Absent a sufficient ultimate strength value, normal physiological stresses can rupture the boundary 46, exposing the implanted cells to the full effect of the, host's immune and inflammatory systems.

The inventors presently believe that ultimate strength values sufficient to withstand physiological stresses close to the host tissue without rupture in animals lie above about 100 pounds per square inch (PSI). In comparison, the ultimate strength value for PVA hydrogel microcapsules is only about 2 to 2.5 PSI.

The ultimate strength values are determined by measuring the tensile strength of the material. Tensile strength is measured by ASTM D-412.

Metabolic Transit Value

The boundary 46 also has a metabolic transit value that sustains a flux of nutrients into the chamber 18 and waste products from the chamber 18 sufficient to sustain the viability of the implanted cells during the ischemic period.

The metabolic transit value takes into account the permeability value (P) and the porosity value (PORE) of the boundary 46.

The Permeability Value

The permeability value (P) is the measure of the amount of solute that travels through the boundary per unit time and unit surface area, given some fixed external solute concentration (measured in cm/sec in this specification). Example 1 sets forth a methodology for determining the permeability value according to this aspect of the invention.

The Porosity Value

The porosity value (PORE) represents the space in the boundary 46 that does not contain material, or is empty, or is composed of pores. Expressed as a percentage, the porosity value (PORE) measures the % volume of the boundary 46 that is not occupied by boundary material.

To derive the porosity value PORE (in %) for materials having a PORE equal to or greater than lot, the practitioner uses the following formula:

$$PORE = 100(1-(\rho_b/\rho_m)$$

where:

ρ_b is the density of the boundary as determined from its weight and volume, and

ρ_m is the density of the boundary material.

To derive the porosity value PORE (in %) for materials having a PORE less than 10%, the practitioner uses using a scanning electron microscope to obtain the number of pores and their average diameter on the boundary. PORE is then derived according to the following formula:

$$PORE = N\pi(d^2/4)$$

where:

N is the pore density and equals (p_n/a),

p_n is the number of pores in the boundary,

a is the total area of the boundary (in cm^2), and

π is the transcendental constant 3.1416 ...,

d is the average diameter of the pores (in cm).

The inventors have found that, above a threshold minimum porosity value, the permeability value is the principal influence upon the overall metabolic transit value. Still, below the threshold minimum porosity value, the metabolic transit value must also take into account the porosity value and the physical structure of the porous boundary 46. These considerations will be discussed later in greater detail.

To simplify the selection of a boundary 46, the inventors recommend the use of boundaries having a porosity value (PORE) greater than the observed minimum threshold value. Then, metabolic transit value and the permeability value can be treated as the same.

Referring now to Figs. 23-24, a further embodiment of the assembly 100 is illustrated. In this embodiment, the assembly 100 includes a port member 102 that provides means for accessing the interior or cell chamber 104 of the assembly 100. In the embodiment illustrated, the port member 102 is an elongated flexible tube 106. The elongated flexible tube is in fluid communication with the cell chamber 104 that is defined by the wall elements of the assembly.

It should be noted, however, that the port member 102 does not have to be defined by an elongated flexible tube. Other structures can be used to provide access to the cell chamber of the assembly. For example, a resealable injection site can be provided on the assembly for providing access to the cell chamber.

By providing a port on the assembly, the port can be used to initially place cells 105 within the assembly 100. In this regard, a syringe or other device can be used to place the cells within the cell chamber 104 defined by the assembly 100.

For example, with respect to the embodiment illustrated in Figure 23, the cannula of a syringe would be received by the flexible tube 106 allowing cells to be placed within the cell chamber 104. In filling the interior of the assembly, a syringe is utilized having a cannula that will be received within the full length of the port 102 and to an end(107 of the cell chamber 104 of the assembly. Using a syringe, as tissue is laid within the chamber 104 of the assembly 100, the syringe is slowly removed from the chamber. This methodology will insure

that too great a pressure is not used that will damage the membrane as the tissue is laid. It is believed that the pressure used should be lower than syringe pressures. By using reduced pressure, additionally, this will insure that tissue is not damaged due to frictional forces that can shear the tissue if high pressures are utilized.

Of course, if desired, the cells can initially be sealed within the assembly 100 as set forth above with respect to the embodiments of the assembly 100 not including a port.

Because the cells can be placed within the assembly 100 through use of the port 102, the port allows the assembly to be implanted without cells for prevascularization of the assembly. Prevascularization of the assembly, and the benefits inherent therein, is disclosed in U.S. patent application Serial No. 08/180,018, filed on January 11, 1994, naming as inventors Steven Neuenfeldt, James Brauker, Robert Clarke, and Victoria Carr-Brandal. The disclosure of that application is incorporated herein by reference. Once the assembly 100 is vascularized within the host, cells can be added to the assembly 100 as described below.

Additionally, because the assembly 100 includes at least one port 102, the assembly can be "recharged" by placing new cells within the assembly after a fixed period of time. Heretofore, once the cells within the implanted assembly died or no longer were viable, it was necessary for a surgical intervention to remove the implanted assembly from the host and insert a new assembly including new cells. The present invention overcomes the disadvantages of the prior art by providing an assembly 100 that can be recharged with new cells.

To this end, in an embodiment, the assembly 100 is implanted with the flexible tube 106 being located near the outer epidermal layers of the patient. To recharge the assembly 100, a surgeon merely creates an incision in the

skin exposing the end portion of the flexible tube 106. This allows the surgeon to thereby access the interior of the assembly 100 utilizing a syringe or other method for depositing new cells within the cell chamber 104 of the assembly 100 through the flexible tube 106.

After the cells have been placed within the assembly 100, the tube 106 can then be sealed using a heat seal, mechanical means, or another method. The tube 106 is then placed within the patient and the incision is closed.

Pursuant to the present invention, a port can be used on any of the embodiments of the implant assemblies set forth in this application, as well as other implant assemblies. For example, as illustrated in Fig. 25, the assembly 130 can comprise a disk-like device having an interior 136 with an O-ring or hoop that defines a cell chamber. The disk defines an aperture 138 for sealingly receiving the port 140. In the case of the illustrated embodiment, the port 140 is an elongated flexible tube.

In another embodiment of the invention illustrated in Figure 26, an implant device 150 is provided including two assemblies 152 and 154. The two assemblies 152 and 154 share a flexible tube 156 therebetween. The tube 156 is in fluid communication with the cell chambers 155 and 157 of each assembly 152 and 154. In this regard, a first end 158 of the tube 156 is sealingly received by the assembly 152 and a second end 160 of the tube 156 is sealingly received by assembly 154.

Such an implant device 150 allows a variety of different applications and methods of use of the assemblies 152 and 154.

In an embodiment of the invention, the device 150 can be implanted and prevascularized in the host. After the device 150, and specifically assemblies 152 and 154 are vascularized, the cell chambers 155 and 157 of same can be filled with kells. To this end, a surgeon will create an

incision in the patient and access the tube 156. To aid the surgeon in locating the tube 156 a location clip can be attached to the tube. However, other means can be used to allow the surgeon to identify the approximate location of the tube prior to creating an incision in the patient, e.g., the tube can include at least portions thereof that are radiopaque and can thereby be located by an x-ray of the patient.

Once the tube 156 is exposed, the surgeon will then sever the tube 156 in two. Each of the resultant tubes that are created will be in fluid communication with an interior of the respective assemblies 152 and 154. This will allow the surgeon to access the interior of the devices 152 and 154 and fill same with cells using a syringe or other means. The tubes are then sealed and replaced in the patient. The incision is then closed.

In another embodiment of the implant device 150, the cells can be sealed within the assemblies 152 and 154 of the device 150 by heat sealing or other method when the device is created. After the device 150 is implanted, when necessary, the tube 156 can then be accessed and severed allowing the surgeon to recharge the assemblies 152 and 154.

As illustrated in Figs. 27a-c, the use of a ported device allows a plurality of implant assemblies 171-176 to be implanted in a patient and coupled together. Each of these ported implant assemblies can be charged either prior to, being implanted into the patient or after implantation in the patient. Likewise, after a predetermined time, the assemblies can be charged to compensate for cells that are no longer viable or die.

As illustrated in Fig. 27a-27c, if a plurality of assemblies 171-176 are used, the respective tubes 181-186 of the assemblies can be clipped together with a location

clip 187. This will allow the surgeon to easily locate and access the tubes 181-186.

As illustrated schematically in Figures 27a-27c, after the initial implantation, the clip 187 can act to seal the interiors of the tubes 181-186. When necessary, the surgeon will make an incision and access the clip 187. By removing the clip 187, the surgeon can access the interior of the tubes 181-186. This will allow the surgeon to fill each of the assemblies 171-176 with, for example, a syringe 189. After the assemblies 171-176 have been filled utilizing a syringe 189 or other device, the tubes 181-186 can be sealed again with the location clip 190. The tubes are then placed within the body 191 and the wound is closed. This allows the surgeon to easily and without a very invasive surgical procedure, to recharge the implanted assemblies 171-176.

In creating a ported assembly having a flexible tube, e.g., the assembly 100 of Figure 23, the length of the tube 106 should be selected so that it allows for multiple recharges of the assembly. In this regard, upon each recharge of the assembly, the tube will be resealed. This sealing process can be accomplished by utilizing a heat seal. Therefore, in accessing the interior of the assembly through the tube, it will be necessary for the surgeon to remove a portion of the tube. Accordingly, the length of the tube should be selected so as to allow a sufficient number of recharges during the useful life of the implanted assembly.

As noted above, it is not necessary to heat seal the tube of the assembly, but rather, the tube can be sealed using mechanical means, e.g., the tube can be clipped. This will allow a reduced length of tubing to be initially utilized since in order to access the tube, the clip is merely removed rather than a portion of the tube being sliced off. Additionally, the tube can be sealed by

injecting a curable substrate into the interior of the tube, such as silicon, and allowing the substrate to seal as a plug.

Depending on the implant assembly's construction, the port can be sealed within the assembly pursuant to a number of methods. For example, ultrasonic welding, over-molding, or crimping can be utilized to create an implant assembly having a port.

Figure 28 illustrates another embodiment of the present invention. As illustrated, if desired, the assembly 192 can include a port at both ends of the assembly. This will allow, if desired, the assembly's cell chamber to be flushed after each recharge. In the illustrated embodiment, the assembly 192 thereby includes a first port 193 and a second port 194. Each port 193 and 194 is in fluid communication with the cell chamber 195. In use, either port 193 or 194 can be designed to receive cells to be laid in the cell chamber 195 of the assembly 192. To flush the cell chamber 195 prior to recharge, a fluid can be injected through port 193 by using a syringe. The original cells within the cell chamber 195 along with fluid would then exit the cell chamber through port 194.

It should be noted that even in devices that include only one port, the cell chamber can be cleared prior to recharging. To this end, for example with the assembly of Figure 23, the cell chamber 104 can be cleaned through aspiration of the cells through the port 102. For example, a syringe can be inserted into the cell chamber 104 through the port and a vacuum can be created to suction the cells present in the cell chamber into the syringe.

As illustrated in Figures 29-32, the assembly 200, in an embodiment, can include a spacer 202 for creating an area 204 within the interior of the assembly 200 for receiving the cells. In the illustrated embodiment, the spacer circumscribes a majority of the perimeter of the

assembly 200. Such a structure would be desirable if the assembly 200 is to be implanted without cells and filled after vascularization in the host. The spacer or insert will maintain optimum cell depth, cell distribution, experimental pillow shape, and insure maximum chemical interactions. Cell space can be maintained *in vivo* prior to or following tissue loading using a filament or insert of approximate diameter equal to the desired tissue depth.

The assembly 200 including the spacer 202 is illustrated without a port. The port would be received and sealed, in the illustrated embodiment, within the opening 206 at an end 208 of the assembly 200.

Of course, the port can be used not only to deposit cells within the assembly, but to, if necessary, deliver nutrients or therapeutic agents to the cells within the assembly. Likewise, if necessary, the port can be used to aspirate a portion of, or all of, the implanted cells after the assembly has been implanted to modify the delivery of therapeutic agents by the assembly.

Additionally, due to use of a port on the present invention, one can test the assembly prior to inserting cells into the assembly or implanting same. For example, if desired, the cells can be inserted into the assembly and therapeutic function can be evaluated prior to implantation.

Efforts to generally simplify the structure of the implant assemblies have revealed that in certain structures may be difficult to create tissue cavities by sealing two membranes together. Direct bonding is not always satisfactory and employing bonding agents, solvents and adhesives to obtain a seal is not desirable. Nevertheless, a sealed implant cavity is required to protect the implanted cells from the immune response of host.

It is also important to provide some means for maintaining a tissue cavity during and after implantation.

Wrinkling or folding of the implant body may lead to cell death of some or all of the implanted cells by failing to maintain optimum cell depth and adequate perfusion of the implanted cells and exchange of nutrients and wastes. Accordingly, minimum structural imparting devices may be required in addition to the membranes themselves. As has been mentioned above, means for providing a maximum thickness may also be important to avoid pillowing and seal rupture occurring post-implantation, during through-port cell loading operations.

Referring now to Figs. 33-37, in accordance with still another aspect of the present invention, implant assemblies having controlled tissue cavities are provided. As illustrated in Fig. 33, a pair of appropriate boundary membranes 210 and 212 are coupled together along their peripheral edges by an overmolded seal 214 comprising a melt-fusible thermoplastic polymer material.

Overmold seal 214 may be formed by positioning membranes 210 and 212 in overlying registering relationship. A pair of thermoplastic sealing rings 216 and 218 may be positioned adjacent the edge portions of membrane layers 210 and 212 in overlaying aligned relationship. Thereafter, the membrane layers 210 and 212 may be coupled and sealed by melt-fusing together the sealing rings 216 and 218 by applying heat to the peripheral edge portion.

The sealing rings 216 and 218 soften and flow upon application of heat and pressure. The molten polymer penetrates into the pores and spaces of the membrane layers 210 and 212 and rings 216 and 218 melt-fuse together upon cooling to provide a strong, cooperative mechanical engagement and coupling of the membranes 210 and 212.

In accordance with the embodiment illustrated in Fig. 33, a hollow, membrane-bounded chamber 215 is provided between the edge-sealed membranes 210 and 212. A spacer

filament 217 is provided within chamber 215, which is effective to maintain a minimum separation distance or thickness dimension, d, defined between the inner facing surfaces of membranes 210 and 212. Spacer filament 217 may comprise any fiber or filament material and may be made of a suture material such as polypropylene, polyester or the like.

Referring now to Fig. 34, another implant assembly 220 is illustrated which comprises membranes 222 and 224 secured together along the peripheral edge portions thereof by an inner or central spacer member 226 and a pair of external or outer spacer elements 228 and 230. Inner spacer member 226 has a pair of opposing major contact surfaces 232 and 234. Outer spacer members 228 and 230 have inwardly facing contact surfaces 236 and 238, respectively.

In accordance with this invention, as illustrated in Fig. 34, a pre-assembled lay-up or laminate including the first and second membrane layers 222 and 224 and alternating spacer layers 230, 226 and 228 is prepared. The peripheral edge portions of the pre-assembled laminate are subjected to localized heating at temperatures and pressures sufficient to cause softening and melt flow behavior in the spacer members 226, 228 and 230 along their respective contact surfaces 232, 234, 236 and 238. Compressive loading or inward pressure applied to the heated pre-assembled laminate causes the membrane layers 222 and 224 to become at least partially embedded into contact surfaces 232 and 234. Portions of contact surfaces 232 and 234, as well as 236 and 238, flow and penetrate the membrane layers 222 and 224 to enter and occupy pores and interstitial spaces present in the membranes 222 and 224.

The penetration and fingering of the heated spacer members 226, 228 and 230 into the membrane layers 222 and 224 leads to the formation of strong, firmly adherent,

cooperating mechanical engagement between the spacers and the membranes. Implant assembly 220 has a hollow interior chamber 242 for holding cells bounded by the inner facing surfaces of membrane layers 222 and 224 and the inner vertical sidewall surface 240 defined by inner spacer member 226.

In accordance with the embodiment illustrated in Fig. 34, at least one of the membrane members 222 and 224 is selected from PTFE-containing membrane materials. Membrane layers 222 and 224 can comprise a variety of materials. For example, membranes 222 and 224 may be selected from PTFE, cellulose, nylon (polyamide), cellulose acetate and polyolefin, e.g., polyethylene or polypropylene membranes. Moreover, each membrane 222 and 224 may comprise a complex membrane including a polypropylene membrane layer having a PTFE membrane or coating or surface treatment layer applied to one or both surfaces thereof. Of course, membrane layers 222 and 224 may be the same or different.

Illustrative membranes which are commercially available are sold under the tradenames Gore-Tex™ and Millipore. The configuration of the membranes 222 and 224, the relative thickness, pore size and pore density characteristics may vary as desired.

These membranes are coupled together by melt-fusible spacer members. Spacer members 226, 228 and 230 may be the same or different and are generally selected from biocompatible, melt-fusible thermoplastic polymer materials. Preferred polymers for use in making the shaped spacer members are thermoplastic polyesters comprising condensation polymers resulting from reaction of di- or polyfunctional polyols with di- or polyfunctional carboxylic acids. Many thermoplastic polyesters are commercially available.

The spacer members 226, 228 and 230 may be purchased in the form of sheet-like films or webs of polyester

materials. A preferred polyester material for use herein is a Hollytex® brand non-woven polyester web including polyester fibers bound with a polyester binder resin.

In an embodiment, the spacer members are made from a melt-fusible and melt-flowable material which may be subjected to localized heating. Upon heating to a melt-flow condition, the spacers cooperatively interact with the membrane materials to form the firmly adherent mechanical engagement required to make satisfactory implantable assemblies.

The pre-assembled laminate is preferably heat-fused or melt-bonded by a localized heating method which does not harm or destroy any living cells placed in the chamber area 242. The preferred method is by ultrasonic welding, although other methods including hot platen, RF welding, infrared welding, hot plenum or the like may also be employed. For membranes and spacers having thickness of from 0.005 inches to about 0.250 inches, satisfactory welding may be achieved with a Branson 900 series, 40 Khz, 700 watt welder including a 941 AES actuator, 947 m power supply and 91 C power control. Good results have been obtained with the welder set at 80% power with black booster, a horn amplitude of about 1.25 mils, a weld pressure of 50 psig, a trigger force of 20 lbs, a down speed of about 1.0 to 1.25 inches/second and a hold time of from about 0.1 to about 1.0 seconds.

In accordance with an important aspect of this invention, implant assembly 220 may be made so that inner spacer member 226 defines a minimum thickness dimension, d, between membranes 222 and 224 selected to be approximately equal to a desired minimum tissue depth for the implanted cells disposed within chamber 242. Spacer member 226 is generally a planar member having a cut-out central portion. The outer edge shape of spacer member 226 may be circular, oval or polygonal in configuration and the cut-out central

portion may be the same or different as the outer edge shape and may be circular, oval or polygonal.

Referring now to Figs. 35 and 36, in accordance with an embodiment, spacer member 226 is provided with means for subdividing the chamber area 242 into sub-chamber units 244. In Fig. 35, spacer member 226 includes a projecting arm portion 246 extending between opposed portions of the periphery of the spacer member to define sub-chambers 244a and 244b. In Fig. 36, a plurality of filaments 248 or strands are provided across the spacer members to define four sub-chambers 244a, 244b, 244c and 244d. Preferably the filaments 248 comprise a suture material and braided suture materials are especially preferred. Alternatively, filaments 248 may be solid or hollow, and hollow core filaments containing cells, nutrients or any other desired materials may also be employed.

Referring now to Fig. 37, a preferred embodiment of implant assembly 220, also includes a means for limiting or defining a maximum cross-sectional thickness dimension (g) for chamber 242. As depicted therein, a relatively non-elastic polyester mesh layer 250 and 252 is secured by heat bonding to the assembly on the outside of overmolded membranes 222 and 224. As shown in Fig. 37, the living tissue 254 may expand to fill the sub-chamber area 244a pushing membranes 222 and 224 outwardly until they abut the outer mesh layers 250 and 252, respectively. In this manner, the maximum thickness dimension (g) for the chamber 244a and the tissue layer may be controlled as desired.

The outer mesh layers may be coupled to the implant assembly by any suitable securement method. In embodiments where the outer mesh is a polyester material, it may be directly melt fused together in a taut condition over the implant assembly. Alternatively, the outer mesh layers 250 and 252 may be ultrasonically welded to polyester layers

216 and 218 of overmolded peripheral seals 214, to spacer members such as 228 and 230, or both.

The outer mesh layers 250 and 252 are effective to provide some additional structural support in the implant assembly to help prevent folding and wrinkling of the assembly during implantation and, after implantation, to help prevent overexpansion of the membrane during filling procedures. During filling operations, internal pressures may be introduced into chambers, such as 215, 242, 244a, which exceed the bubble point of the membranes 210, 212, 222 and 224. The outer mesh or screen layers help to constrict the membrane layers to prevent pillowing which may result in destruction of the edge seal of the assembly.

The mesh materials do not interfere with vascularization of the implant assembly and permit full perfusion and exchange of nutrients into and waste products out of the membrane-bounded cell chamber 244a. In an embodiment, the mesh or screen layers 250 and 252 may be seeded or treated with angiogenic materials to further promote close vascularization of the implant assembly.

As illustrated in Fig. 37, the implant assembly may also include filaments 248. In an embodiment, such as the one depicted in Fig. 37, the filaments are removably mounted in chamber 242. The spacer ring members 226 and filaments 248 maintain the minimum thickness of the ported implant assembly upon implantation. After vascularization of the implant has occurred, the filaments 248 may be removed from the ported assembly. This helps to break up and remove proteinaceous materials from the chamber 242 prior to depositing the living cells into the pre-vascularized implant assembly. Braided suture materials are well suited for use as filaments 248 because they provide a rough surface which assists with fluid adhesion.

Other methods for controlling the maximum expansion of the membranes to prevent overstress may include heat

staking and clipping. More particularly, small separate plugs of spacer material may be melt fused to the membranes at various points throughout the chamber to limit pillowing.

An external barrier or limit may also be provided, for example, in the form of a surgical clip, such as clip 42 in Fig. 8. In accordance with this embodiment, an elongate clip may be clamped to the edge of an implant assembly with an extended clip arm portion traversing or overlaying the chamber area to prevent pillowing. A surgical clip may also be used adjacent a port area to provide localized support at the port site. This helps to restrict the distance effect from the port, by promoting more complete and even cell distribution generally throughout the chamber area.

As is apparent from the foregoing, the present invention provides methods for sealing membranes together without the need for bonding agents, adhesives or solvents. The resulting implant structures may be used to create living tissue cavities which may be successfully implanted and vascularized by the host. The implant devices provide a suitable environment for the living cells providing tissue protection and permitting full therapeutic expression. The implant assemblies in accordance with this invention generally minimize the amounts of materials required for device construction.

By way of example, and not limitation, examples evaluating the present invention will now be given. As the following Example 1 shows, the inventors have discovered that there is a direct correlation between the metabolic transit value and implanted cell survival during the ischemic period.

EXAMPLE 1

Embryonic lungs enclosed in membrane chambers having different permeability values were implanted in subcutaneous sites in rats.

1. Permeability

The permeability values for the membrane chambers were obtained for insulin diffusion in a conventional benchtop diffusion chamber, made by Crown Glass Company, Somerville, New Jersey (Part Number DC-100), using radioactively labeled (^{125} I) insulin as the solute (obtained from ICN Biochemicals). The diffusion chamber had two chambers (which will be called Chambers A and B), each with a volume of 3 ml. The diffusion chamber presented a membrane surface area between the two chambers (where diffusion occurs) of 0.7 cm^2.

The practitioner cuts the membrane material to be tested to a predetermined, known size.

If the membrane is hydrophobic, the practitioner wets the membrane before conducting the permeability test, using conventional wetting techniques.

The practitioner places the membrane in the diffusion chamber. The assembly of the diffusion chamber locates the membrane between the two chambers of equal volume, called Chamber A and Chamber B. In this way, the practitioner also fixes the cross sectional area (A) of the membrane. The diffusion chamber is uniformly heated to a temperature of about 37 degrees C during the test.

The practitioner loads equal amounts of buffer solution into Chamber A and Chamber B. The buffer solution can vary. In this Example, the practitioner can use phosphate buffered saline, 0.5% BSA as the buffer solution.

The practitioner then loads equal amounts of unlabeled (non-radioactive) insulin (about 3.4 micro units/ml) into Chamber A and Chamber B. Porcine pancreas insulin purchased from Sigma with an activity of 26.1

units/ml, or comparable material, can be used. The unlabeled insulin occupies any adsorption sites that may be present.

The practitioner uniformly stirs the fluids within the chamber at about 600 RPM, using a magnetic stir plate and magnetic stir rods (about 1 cm in length) placed in each Chamber A and B. The practitioner allows the system to equilibrate for about one hour.

The practitioner then removes a selected volume of buffer solution from Chamber A and adds back an equal volume of radioactive insulin. The radioactive insulin suspension is filtered before use to remove free ^{125}I.

While stirring the fluids within Chamber A and Chamber B, the practitioner draws equal aliquots of fluid from each Chamber A and B (e.g. about 15 uL) at 2, 4, 6, 8, 10, 15, and 30 minute intervals.

The practitioner then counts the radioactivity levels in the samples using a gamma counter.

The practitioner determines the change in the counts (i.e., insulin concentration) in Chambers A and B per unit of time, suitably corrected for background noise.

The practitioner graphs the count and time pairs for each Chamber in terms of time versus the counts (with the counts being the Y-coordinates and time being the X-coordinates), restricting the analysis to points for which the counts in Chamber B are less than about 10% of the initial counts in Chamber A. The practitioner then derives a linear equation, fitting the range of counts (y) over the set of times (x) for each Chamber according to the following equations:

For Chamber A:

$$Y_a = Y_{Intercept} - (N_a * X)$$

where

$Y_{Intercept}$ is the count value where the graph intersects the Y axis, and

N_a is the slope of the Chamber A graph.

For Chamber B:

$Y_b = Y_{Intercept} + (N_b * X)$

where

$Y_{Intercept}$ is the count value where the graph intersects the Y axis, and

N_b is the slope of the Chamber B graph.

The practitioner preferably uses a commercially available computer program to simplify the derivation process described above.

The practitioner then derives the permeability value (P) according to the general expression:

$$V_{10} * \frac{dM_b}{dt} = PA\ (M_a - M_b)$$

where

V_b is the volume of Chamber B

dM_b/dT is the change in counts in Chamber B per unit time, which is the slope of the B graph derived above (N_b),

P is the permeability value,

A is the area of the boundary tested, and

$M_a - M_b$ is the mass gradient of insulin across the membrane.

The practitioner knows V_b and A, which remain constant throughout the test. The practitioner also knows dM_b/dT, the slope of the graph for Chamber B (N_b) from the linear equation derived for Chamber B. The practitioner converts the units of N_b (counts per min/min) into counts per minute/sec by dividing by 60 (the number of seconds in a minute).

The practitioner calculates M_a by solving the linear equation derived for Chamber A for y when t = 15 minutes (i.e., the mid point time for the test). By using the mid point time for the test, the practitioner obtains an average value for the period of the test. The practitioner

similarly calculates M_b by solving the first order linear equation derived for Chamber B for y when t = 15 minutes. From these values, the practitioner calculates $M_a - M_b$.

The practitioner can now derive the permeability value (in cm/sec) as follows:

$$P = \frac{V_b N_b}{60A \quad (M_A - M_B)}$$

Actually, the permeability value derived also includes the boundary layer effects,that are associated with inevitable stagnate fluid layers at the membrane surface in Chambers A and B during the test. To arrive at the "true" intrinsic permeability value for the boundary, the practitioner would have to adjust for the boundary layer effects. However, for the purposes of this invention, a knowledge of the inherent membrane permeability is not essential, because it will be proportional to the experimental permeability value determined following the methodology detailed above.

Yet, the practitioner can follow the foregoing methodology to quantify the relative permeability values for selected boundaries, since boundary layer effects will remain constant as long as the stirring method used remains the same.

The disclosed methodology can be used to assess whether a given boundary fits the criteria established for the permeability value according to this aspect of the invention.

2. Porosity

The porosity values (PORE) of the boundaries tested ranged from less than about 15% to greater than about 70%.

3. Determining Cell Survival

Embryonic lungs were removed from Lewis rat embryos between days 13.5 and 17.5 of development. The lungs were kept on ice in Dulbecco's Modified Eagle's

Medium (DMEM), 20% fetal bovine serum. The lungs were minced until they were approximately 1 mm^2. Minced lung tissue (5-10 μl) was placed into implant assemblies like those shown in Figs. 1 to 4. The lung tissue was encapsulated within test membranes having various permeabilities, porosities, and pore sizes. The implant assemblies were placed in DMEM (20% fetal bovine serum) at 37 degrees C until surgery, which occurred within 2 hours. The implant assemblies were implanted in subcutaneous or epididymal fat sites in male Lewis rats for 3 weeks.

After three weeks of implantation, the assemblies were explanted, trimmed of excess fat, and fixed with 2% glutaraldehyde in Sorensen's,buffer. Sections of the assemblies were stained with hematoxylin and eosin.

Cell survival was scored based upon histological appearance of the implanted cells. Tissues were scored as "excellent" if they had normal characteristics of lung tissue, such as epithelial tubules, cilia, and formed cartilage. Tissues were scored as "good" if the tissue were still alive, but not well differentiated (for example, a high number of mesenchymal cells). The tissues were scored as "poor" if no or few cells remained alive.

In other histology studies using implanted pancreatic cells, survival assessment would involve analyzing the differentiated function of the pancreatic cells in terms of their insulin release in the response to a glucose challenge.

Table 1 shows the permeability value for those boundaries having a porosity value (PORE) greater than 70%, correlated with the survival of the implanted lung tissues.

Table 1: Membranes with PORE > 15%

Membrane	Pore Size or MW Cutoff	Permeability	Tissue Survival
cellulose acetate[1]	unknown	9	excellent
cellulose acetate[1]	unknown	5.3	excellent
Biopore™[2]	0.45 µm	2.6	excellent
polyvinyl difluoride[1]	unknown	2.5	good
cellulose mixed ester[2]	1.2 µm	2.0	poor
polyvinyl difluoride[1]	unknown	1.7	good
polypropylene[3]	0.075 µm	1.4	poor
cellulose acetate[1]	unknown	1.3	poor
cellulose mixed ester[2]	0.45 µm	0.9	poor
polyethylene[3]	0.08 µm	0.9	poor
cellulose[4]	300 kD	0.6	poor
cellulose[4]	50 kD	0.2	poor

---

*X 10^{-4} cm/s

1 Baxter Healthcare Corporation (Deerfield, IL)

2 Millipore Corporation (Bedford, MA)

3 Hoechst Celanese (Charlotte, NC)

4 Spectrum Medical Instruments (Los Angeles, CA)

Table 2 shows the permeability value of those boundaries having a porosity value (PORE) less than 15%, correlated with the survival of the implanted cells.

Table 2: Membranes with PORE < 15%

Membrane*	Pore Size	Perme-ability¥	Tissue survival
Nuclepore[1]	0.8	4.4	Fair
Nuclepore	0.4	3.1	Poor
Nuclepore	0.22	2.3	Poor
Poretics[2]	0.1	2.2	Poor
Poretics	0.08	0.5	Poor
Poretics	0.05	1.2	Poor
Poretics	0.03	0.9	Poor
Poretics	0.01	0.2	Poor

---

* polycarbonate

¥ X 10^{-4} cm/s

(1) Nuclepore Corporation (Pleasanton, CA)

(2) Poretic Corporation (Livermore, CA)

Tables 1 and 2 demonstrate the direct relationship between the metabolic transit value of the boundary and implanted cell survival. More particularly, the Tables show that implanted cell survival significantly improves when the permeability value of the boundary increases.

For the type of cells studied in Example 1, boundaries having a permeability value for insulin less than about 1.5 x 10^{-4} cm/sec, as determined using the described methodology, consistently did not support cell survival, regardless of the porosity value. Yet, boundaries having a permeability value for insulin greater than about 1.5 x 10^{-4} cm/sec and a porosity value greater than about 15% uniformly supported vigorous cell survival.

Boundaries having a lower porosity value (less than about 15%) also supported cell survival (see Table 2). Still, the metabolic transit value for these less porous boundaries requires a higher relative permeability value. For the type of cells studied in Example 1, boundaries having a lower porosity value (less than about 15%) supported cell survival when the permeability value for insulin was greater than about 4.0 x 10^{-4} cm/sec.

The inventors believe that, when considering less porous boundaries, their specific physical structure must also be taken into account. The less porous interfaces used in Example 1 were track-etched membranes. These membranes have uniform cylindrical pores separated by relatively large, nonporous regions.

The poor tissue survival using the low porosity boundaries could be due to uneven localization of areas of high permeability, or due to constraints produced by cells

on the particular physical properties of the track-etched membranes. For example, the cells may be more efficient at plugging up the cylindrical pores of the track-etched membranes either with cell extensions or cell secretions. Thus, although the track-etched membranes have high permeability values in vitro, the response of the cells in vivo may prevent the attainment of sufficient metabolic transit to support the graft cells.

Example 1 demonstrates a methodology that can be followed to identify for other cell types the applicable metabolic transit value that assures cell survival during the ischemic period after implantation.

The absolute permeability and porosity values that constitute a given metabolic transport value will depend upon the type of cell and the methodologies of determining permeability and porosity. Different conditions will give different absolute values. Still, regardless of the test conditions, the relative differences in permeability and porosity values derived under constant, stated conditions will serve as an indicator of the relative capabilities of the boundaries to support implanted cell viability.

Tables 1 and 2 also show that good tissue survival occurs even with membrane materials that are subject to the formation of an avascular fibrotic response (the so-called "foreign body capsule"). The fact that these membrane materials create this response has, in the past, led to the widely held view that the formation of the foreign body capsule caused poor diffusion of nutrients. Example 1 shows the error of this conventional wisdom.

As Table 1 shows, the use of relative thicker cellulose acetate membranes with 0.45 micron pore size (130 microns thick) having an insulin permeability of 0.9×10^{-4} cm/sec results in poor tissue survival. On the other hand. the use of relatively thinner cellulose acetate membranes with the same approximate(pore size (10 microns thick) and

having a greater permeability of 5.3×10^{-4} cm/sec results in excellent tissue survival.

The thickness of the membrane does not alter the foreign body response; a foreign body capsule will form whether the membrane is relatively thick or thin. However, membrane thickness does alter the permeability value.

Thus, the cells died when the thicker boundary was used, not because of the formation of the foreign body capsule, but because of poor nutrition and poor waste removal due to the low permeability of the thicker boundary. The tissue survived when the thinner boundary is used, because the higher permeability provided improved cell nutrition and improved waste removal to support cell metabolism, even when the same foreign body capsule forms.

EXAMPLE 2

In an experiment, the practitioner grew RAT-2 fibroblasts (ATCC CRL 1764) in 20% Fetal Bovine Serum, 2 mM 1-glutamine, and DMEM (Sigma) (high glucose) until 100% confluent. The RAT-2 cells were split 1:2 in the above media, 16 to 24 hours before surgery.

On the day of surgery, the cells were washed with 15 ml of HBSS (no ions) and trypsinized off the culture flask. The practitioner neutralized the trypsin by adding 5 ml of the above media. The practitioner pelleted the cells by centrifugation (1000 rpm, 10 minutes, at 22 degrees C).

The pelleted cells were counted and resuspended in media in three concentrations: 5.3×10^{3} cells/10 μl; 5.8×10^{5} cells/10 μl; and 5.8×10^{6} cells/10 μl.

Implant assemblies like that shown in Figs. 1 to 4 having boundaries of differing permeability values were made. The permeability values ranged from 0.2×10^{-4} cm/sec to 9×10^{-4} cm/sec (see Tables 1 and 2 to follow). The total boundary area for each assembly was about .77 cm^2.

The various cell concentrations were loaded into the assemblies. The practitioner implanted the assemblies both

subcutaneously and within the epididymal fatpad of host rats.

After 3 weeks, the assemblies were explanted and examined histologically, as described previously.

The inventors observed that assemblies loaded with 5.8×10^3 cells and 5.8×10^5 cells displayed excellent results, given sufficient boundary permeability values. After 3 weeks of implantation, the initial load of 5.8×10^5 cells proliferated to approximately 2.0×10^7 cells. The inventors observed that assemblies having higher initial loads of 5.8×10^6 cells displayed poorer results.

Lower initial loads (less than 5×10^6) were able to survive the ischemic period and even proliferate 30 to 3000 fold. The final cell counts in the assemblies with lower initial loads were three times higher than the initial load of the assemblies that failed because of higher initial loads. Thus, high loads of cells (greater than 5×10^6) are unable to survive during the ischemic period, yet the same cell loads are able to survive after the ischemic period as progeny of the cells from lower initial loads.

Close Vascularization at the Boundary

(1) Presence of Angiogenic Material

Neovascularization close to the boundary is essential to the long tern survival of the implanted cells within the host. The inventors have found that the host will not grow new vascular structures 54 close to the boundary (as Figs. 24 and 25 show), unless it is stimulated to do so. Without proper stimulation, the ischemic period never ends, because a classical foreign body reaction occurs.

The assembly 10 therefore includes an angiogenic material 56 for stimulating neovascularization close to the boundary.

The specific identity of the angiogenic material 56 is not known. Still, the inventors have determined that

the presence of certain cells stimulate neovascularization, while others do not.

For example, the presence of lung tissues; pancreatic islets; adult pancreatic ducts; and cultured cell lines of fibroblasts, mammary gland, and smooth muscle cells induces or stimulates neovascularization, when compared to the vascularization on control grafts where these cell types were not present.

On the other hand, the presence of primary skin fibroblasts and microvascular endothelial cells do not induce neovascularization.

The inventors believe that certain cells induce or stimulate neovascularization by secreting angiogenic factors. Because the stimulus crosses membranes that aze impermeable to cells, it must be a molecular signal that the living cell generates. This further underscores the need to support the implanted cells during the ischemic period. If angiogenic source cells perish, the molecular signal stops, and the neovascularization process comes to a halt.

According to this aspect of the invention, when cells are implanted that have a desired therapeutic effect, but do not secrete angiogenic material, the assembly 10 includes a separate angiogenic source cell or material 56.

Following the invention, the practitioner selects an boundary 46 having a sufficient metabolic transit value to support the viability of the implanted cells, i.e., the angiogenic source cells and other non-angiogenic, therapeutic cells (when present) implanted with them. The practitioner also selects a pore size and ultimate physical strength to make the boundary 46 impermeable to the neovascular growth that the angiogenic source cells stimulate.

Alternatively, the practitioner may coat the exterior of the boundary 46 itself with an angiogenic

material 56. Of course, the coated boundary 46 still must have sufficient pore size, ultimate strength, and metajolic transit value to sustain the cells 12 isolated behind the boundary 46.

Because the new vascular structures 54 cannot penetrate the boundary 46, and because the angiogenic signal to the host continues, the new vasculature proliferates close to the boundary 46.

As Fig. 21 shows, when the cells 12 die during the ischemic period, and close vascularization is not stimulated, the fibroblasts of the foreign body capsule 52 become closely packed and dense. However, as Fig. 20 shows, when the cells 12 survive the ischemic period, and the process of close vascularization is stimulated, the fibroblasts of the foreign body capsule 52 is altered to form a less dense and more dispersed structure.

(2) Conformation for Close Vascularization

In the preferred embodiment, the porous boundary 46 includes an interface 47 with the host tissue that is characterized by a structural conformation that further enhances the growth of vascular structures by the host close to the boundary.

To achieve this result, each wall element 32/32' and 34/34' of the assemblies 10/10' includes a first porous region 58 and a different second porous region 60. The first porous region 58 comprises the boundary 46 previously described. The second porous region 60 comprises the interface 47.

The first porous region 58 faces the implanted cells 12 (see Fig. 20). The first porous region 58 has the boundary characteristics, above described, of pore size; ultimate physical strength; and metabolic transit value. It is this region 58 that isolates the implanted cells from the immune mechanisms of the host, while sustaining their

viability through the flux of nutrients and wastes during the ischemic period.

The second porous region 60 faces the host tissue 44 and forms the interface 47 with it (see Fig. 20). The second porous region 60 has an architecture that enhances the formation of vascular structures 54 close to the boundary 46. The formation of these vascular structures 54 within the second region 60 mark the end of the ischemic period. Vascularization in the second region 60 sustains the viability of the implanted cells 12 after the ischemic period ends.

A foreign body capsule 52 still forms about the implanted assembly 10. However, close vascularization within the second porous region 60 can alter the normal configuration of the foreign body capsule 52. As Fig. 20 shows, a life sustaining vascular bed forms within the capsule 52 close to the boundary 46, keeping flattened macrophages, foreign body giant cells, and fibroblasts from pressing against and blocking the boundary 46.

Because of the pore size, strength, and permeability characteristics of the porous first region 58, it is impermeable to the neovasculature 54 formed in the second region 60.

The inventors believe that close vascularization occurs if the three dimensional conformation of second region 60 creates certain host inflammatory cell behavior.

The inventors have observed by light and electron microscopy that close vascularization occurs if, in the initial period of implantation, at least some macrophages entering the material are not activated. Activated macrophage are characterized by cell flattening.

The inventors observe close vascularization in regions of an implant where the macrophages that have entered the cavities of the material retain a rounded appearance when viewed through light microscopy (~ 400x).

At 3000x (TEM) the rounded macrophage is observed to have substantially conformed to the contours of the material. Although there is a correlation with macrophage shape, it is not clear that macrophages control the observed, response. However, it is clear that invasion of the structure by host cells is required. Although the bulk of the cells appear to be macrophages, it is possible that other inflammatory cells control the response, therefore the inventors refer to the invading cells as "inflammatory cells," which include but are not limited to macrophages.

On the other hand, foreign body capsule formation occurs when, in the initial period of implantation, inflammatory cells in contact with the implant material flatten against those portions of the material which present an area amenable to such flattening behavior by an inflammatory cell.

The material for the second region 60 that results in formation of close vascular structures is a polymer membrane having an average nominal pore size of approximately 0.6 to about 20 μm, using conventional methods for determination of pore size in the trade. Preferably, at least approximately 50% of the pores of the membrane have an average size of approximately 0.6 to about 20 μm.

The structural elements which provide the three dimensional conformation may include fibers, strands, globules, cones or rods of amorphous or uniform geometry which are smooth or rough. These elements, referred to generally as "strands," have in general one dimension larger than the other two and the smaller dimensions do not exceed five microns.

In one arrangement, the material consists of strands that define "apertures" formed by a frame of the interconnected strands. The apertures have an average size of no more than about 20 Am in any but the longest dimension. The apertures of the material form a framework of

interconnected apertures, defining "cavities" that are no greater than an average of about 20 pn in any but the longest dimension.

In this arrangement, the material for the second region has at least some apertures having a sufficient size to allow at least some vascular structures to be created within the cavities. At least some of these apertures, while allowing vascular structures to form within the cavities, prevent connective tissue from forming therein because of size restrictions.

Further details of the material are set forth in copending U.S. Application Serial No. 735,401 entitled "Close Vascularization Implant Material" filed July 24, 1991, which is incorporated into this Specification by reference.

Making a Boundary

Figs. 11 to 16 show a method of making a preferred embodiment of the wall elements 32 and 34 that forms the boundary. The method integrally joins material selected for the first region 58 to another material selected for the second region 60. The two joined materials form the composite, or laminated, structure 72 shared by both wall elements 32 and 34. The laminated structure 72 joins the interface 47 to the boundary 46.

In the illustrated embodiment, a porous PTFE membrane material having a thickness of about 35 microns and a pore size of about .4 micron is selected for the first region 58. This material is commercially available from Millipore Corporation under the tradename Biopore™.

The porous material selected for the first region 58 has a thickness of about 30 microns and an ultimate (tensile) strength value of at least 3700 PSI, which is well above the desired minimum value. The selected material has pore size of .35 microns, which blocks the passage of inflammatory cells. The selected material has

a permeability value for insulin of 2.6×10^{-4} cm/sec and a porosity value of greater than 70%. The membrane therefore meets the metabolic transit value requirements.

It should be appreciated that other, comparable materials can meet the stated requirements for the first region 58. For example, polyethylene, polypropylene, cellulose acetate, cellulose nitrate, polycarbonate, polyester, nylon, and polysulfone materials can be used. Mixed esters of cellulose, polyvinylidene, difluoride, silicone, and polyacrylonitrile can also be used.

In the illustrated embodiment, a membrane material made by W.L. Gore and Associates (Elkton, Maryland) under the tradename Gore-Tex™ is selected for the second region 60. The Gore-Tex™ material comprises a microporous membrane made from PTFE. The membrane is 15 microns thick and has a pore size of 5 microns. Polyester strands 61 join the PTFE membrane to form a backing for it. The backing has a depth of about 120 microns.

The Gore-Tex™ material also has an ultimate strength value well above the desired minimum value. The conformation of the polyester strands 61 also meets the criteria, set forth earlier, for promoting the growth of neovascular structures.

In Step 1 (see Figs. 10 and 11), the practitioner secures the edges of a strip of the Gore-Tex™ material (second region 60) to a lamination slide 62, with the polyester backing 61 facing the slide 62.

In Step 2 (see Fig. 13), the practitioner places 2 or 3 lamination slides 62 side-by-side on a work surface. Using a syringe 64, the practitioner applies cement or adhesive in continuous filaments 66 in a back and forth pattern across the lamination slides 62. The practitioner touches the syringe tip 64 to the work surface at the end of each filament 66 to begin a new filament 66.

Step 2 forms a criss-crossing pattern of cement filaments 66 across the secured strips of the second region material, as Fig. 13 shows.

The cement selected can vary. For example, the cement can be cellulose acetate or similar epoxy material. In the illustrated embodiment, the cement comprises a mixture of Vynathene EY 90500 EVA resin and toluene (made by Mallinckrodt).

In forming the EVA cement mixture, the practitioner adds about 30 grams of resin and an equal amount of toluene to a bottle. The practitioner seals the bottle to allow the resin to dissolve. The bottle may be periodically shaken to accelerate this process.

The relative amounts of resin and toluene may have to be slightly adjusted to arrive at the right consistency for the cement. If the cement is too thin to form continuous filaments when applied, use less toluene. If the cement is to viscous to be exxressed from the syringe, use more toluene. Small changes in the amount of toluene added result is significant changes in the viscosity of the cement.

In Step 3 (as Fig. 14 shows), the practitioner places preformed strips of the Biopore™ membrane material (first region 58) upon the cement filaments 66 applied in Step 2. In the illustrated embodiment, the practitioner precuts the Biopore™ membrane material into disks having the diameter desired for the wall elements 32 and 34.

In Step 4 (as Fig. 15 shows), the practitioner lays a strip of release material 68 (like Patapar) over the first region material 58 and covers the layered structure with another lamination slide 70. The practitioner clamps the lamination slides 62 and 70 together, bringing the membrane layers into intimate contact.

In Step 5, the practitioner places the clamped lamination slides 62 and 70 in an oven for about 5 to 10

minutes at a temperature of about 80 degrees C. The heat melts the EVA cement.

In Step 6, the heated lamination slides 62 and 70 are allowed to cool to room temperature. Upon cooling and solidification, the filaments 66 securely join the Biopore™ membrane material to the Gore-Tex™ membrane material. The practitioner then unclamps the lamination slides 62 and 70 and removes the finished composite structure 72 (in strips).

In Step 7 (as Fig. 16 shows), the practitioner lays the composite structure 72 strips on a polypropylene cutting slab 74. The practitioner aligns a presized punch 76 over each precut disk, striking the punch with a hammer. The practitioner thereby frees the wall elements 32 or 34 formed of the composite structure of the desired dimensions. Small scissors may be used to snip any adherent polyester strands not cut by the die.

Implant assemblies 10/10' are made using the wall elements in the manner previously described.

It should be appreciated that the first region material 58 can be applied to the wecond region material 60 by various alternative means to form the laminated structure 72. For example, the first region material 58 can be extruded in place upon the second region material 60.

EXAMPLE 3

Assemblies like that shown in Figs. 1 to 4 and constructed according to the foregoing process have been successfully used to accomplish complete correction of diabetes in partially pancreatectomized and streptozotocin-treated rat hosts. The animals were corrected up to 293 days. Upon removal of the implants, the animals reverted to a diabetic state. Histology of the implants revealed the presence of vascular structures close to the boundary.

These assemblies presented a boundary area of about .77 cm^2. Each assembly sustained an initial cell load of

about 600 pancreatic islets (or about 600,000 pancreatic cells).

When implanted, the assemblies sustained cell densities of about 200,000 islets/cm^3. These assemblies, made and used in accordance with the invention, supported 8 times more pancreatic islets in a given volume than the CytoTherapeutics assemblies (having cell densities of only 25,000 islets/cm^3).

Deriving a Therapeutic Loading Factor

As earlier described, one aspect of the invention provides the ability to identify a metabolic transit value associated with a given cell type. Knowing the required metabolic transit value, in turn, makes it possible to identify the clinically practical region of operation, where compact implant assemblies can sustain therapeutically large volumes of cells.

This aspect of the invention provides the methodology to derive and use a therapeutic loading factor (L) to characterize and predict the clinical effectiveness of a given implant assembly for a given cell type.

The therapeutic loading factor (L) takes into account the number of cells (N) that are required to be implanted to achieve the desired therapeutic effect; the effective area (A) of the boundary between the implanted cells and host that the host can be reasonably expected to tolerate; and the metabolic transit value (T) needed to sustain cell viability.

The therapeutic loading factor for a given implant assembly and given implanted cell type can be expressed as follows:

$$L_c = (A/N_c) * T_{min}$$

where

c is the given cell type,

L_c is the therapeutic loading factor for the given cell type,

A is the area of boundary between the implanted cells and the host offered by the given implant assembly,

N_c is the number of cells supported by the boundary area (A), and

T_{min} is the minimum metabolic transit value that will support cell survival during the ischemic period, determined according the methodology set forth in Example 1.

If the practitioner selects boundaries having a porosity value of greater than 15%, then the permeability value (P) alone can be used to express the metabolic transit value (T). The therapeutic load factor can then be expressed:

$$L_c = (A/N_c) * P_{min}$$

where P_{min} is the minimum permeability value that will support cell survival during the ischemic period.

In the assemblies described in Example 3, the observed ratio between the boundary area and the number of implanted cells (A/N_c) for the successful implantation of pancreatic cells was 128 μm^2/pancreatic cell. The inventors believe that a somewhat larger ratio of about 150 μm^2/pancreatic cell will provide a satisfactory margin for variance among different hosts.

As earlier discussed, given a boundary porosity value of greater than 15%, a permeability value (P) greater than about 1.5×10^{-4} cm/sec for insulin should be provided a metabolic transit value that will sustain cell survival during the ischemic period and afterward.

Fig. 22 shows the therapeutic loading curve for pancreatic cells generated based upon the above considerations. The curve displays the predicted region of cell survival in terms of the boundary area-to-cell number ratio A/N (x-coordinate) and permeability value P (y-coordinate) (given a porosity value of greater than about 15%).

Fig. 22 predicts that assemblies operating to the right of the therapeutic loading curve will sustain implanted pancreatic cells. Fig. 22 predicts that assemblies operating to the left of the therapeutic loading curve will not.

The inventors believe that a human diabetic will require the transplantation of about 250,000 pancreatic islets (or about 250 million pancreatic cells) to derive a therapeutic benefit. With this in mind, one can calculate a range of sizes for an implant assembly based upon the A/N ratio.

The equation for calculating the side dimension (L) in cm of a square implant assembly based upon the A/N ratio is as follows:

$$L=\sqrt{\frac{(250,000*1000)\frac{A}{N}}{2}*10^{-8}}$$

where: the factor 10^{-8} converts micron^2 to cm^2.

The equation for calculating the diameter (D) in cm of a round implant assembly based upon the A/N ratio is as follows:

$$D=\sqrt{\frac{(2(250,000*1000)\frac{A}{N}}{\pi}*10^{-8}}$$

where: the factor 10^{-8} converts micron^2 to cm^2.

Table 3 lists a range of L's and D's at different A/N ratios for an implant assembly holding 250,000 pancreatic islets

A/N	A (cm^2)/side	L(cm)	D(cm)
128	160	12.6	14.3

150	188	13.7	15.5
200	250	15.8	17.8
328	410	20.2	22.8
463	579	24.0	24.1

Based upon the foregoing considerations, the inventors believe that A/N ratios less than about 200 μm^2/pancreatic cell define the operating region of implant assemblies that offer compact, clinically practical implant boundary areas. Fig. 22 shows this preferred region.

As Fig. 22 also shows, a practitioner can provide an implant assembly that combines the benefits of compact size with the ability to sustain the requisite therapeutical number of cells, by selecting a permeability value for the boundary that achieves a region of operation to the right of the therapeutic loading curve. The practitioner also selects the prescribed pore size and ultimate physical strength determined in accordance with the invention.

Fig. 22 shows that the prior art hollow fiber implant assembly made by CytoTherapeutics (described in the Background section of this Specification) falls well outside the preferred region of clinically practical operation. This assembly offers an A/N ratio of about 328 μm^2/pancreatic cell, about 1.5 times the A/N ratio of the invention.

Fig. 22 also shows a prior art hollow fiber implant assembly made by W.R. Grace and Co. (Lexington, MA), as reported by Proc. Natl. Acad. Sci. U.S.A., Vol. 88, pp. 11100-11104 (December 1991). Each hollow fiber had a length of 2-3 cm, and an inside diameter of 0.177 cm. There were 200 to 400 pancreatic islets loaded into each fiber for implantation. Taking an average length of 2.5 cm and an average cell load of 300 islets, the associated A/N ratio is 463, more than twice the A/N ratio of the invention.

The foregoing establishes a methodology to derive

and use a therapeutic loading factor for pancreatic islets. This methodology can be followed to identify a therapeutic loading factor for other cell types and other ranges of metabolic transit values. The absolute value of the therapeutic loading factor derived will of course depend upon the type of cell and the methodologies used to determine permeability and porosity. Different conditions will give different absolute values for the therapeutic loading factor.

Still, regardless of the test conditions, the relative differences in the A/N ratios, permeability values, and porosity values derived under constant, stated conditions will serve as a means to characterize and predict the clinical effectiveness of a given implant assembly for a given cell type.

In order to characterize the membrane morphology of membranes that can be used in the embodiments of the present invention, *enface* images of membrane materials were microscopically photographed with a low voltage scanning electron microscope (LVSEM).

Three membrane materials were visually characterized with *enface* LVSEM views:

5 μm PTFE membrane, GORE-TEX® L31324 from W.L. Gore and Associates, Inc. Is an expanded polytetrafluoreothylene (PTFE) membrane with a pore size controlled to 5 μm. It has a nonwoven spunbound polyester backing layer as a support. Vender specification of membrane thickness is 0.006 +/- 0.002 inches.

Reference number: 17222-65-3

Lot number: 41-100593-001

Part number: L31324

0.4 μm PTFEE membrane, BIOPORE® SF1R848E1 from Millipore Corporation is an expanded polytetrafluoroethylene, (PTFE) membrane with a pore size

controlled to 0.4 μm. Vender specification of membrane thickness is 0.0009 +/- 0.0002 inches.

Reference number: 17222-65-2

Lot number: K3JM2594

Part number: SF1R848E1

Woven polyester, SAATIFIL® PES 290/50 from Saati Corporation is a woven polyester membrane made of polyester fibers. Vender specification of membrane thickness is 0.007 to 0.010 inches.

Reference number: 17222-65-1

Lot number: 434180/15/11

Part number: PES 290/50 M PW

Membrane samples for field emission LVSEM analysis were prepared by mounting razor blade cut sections of each membrane on aluminum pin-type SEM specimen stubs. Avery Spot-O-Glue™ adhesive tabs were used to hold the samples in place. The mounted specimens were rimmed with silver adhesive paint for improved conductivity and imaging. The mounted specimens were vacuum sputter coated with palladium to enable reflectance of electrons during SEM observation.

The membrane morphologies are illustrated by Figures 38-44 which are as follows:

Figures 38-40 illustrate the first membrane material examined - GORE-TEX®. To this end:

Figure 38 is a Micrograph at 1000x magnification of the 5 μm Gore-Tex® PTFE membrane surface. Reference number 17222-65-3, Lot number 41-100593-001, Part number L31324;

Figure 39 is a Micrograph at 500x magnification of the 5 μm Gore-Tex® PTFE membrane surface. Reference number 17222-65-3, Lot number 41-100593-001, Part number L31324; and

Figure 40 is a Micrograph at 30x magnification of the 5 μm Gore-Tex® PTFE membrane surface. Reference number 17222-65-3, Lot number 41-100593-001, Part number L31324.

Figures 41-42 are micrographs for the second membrane material BIOPORE®. To this end, the Figures are as follows:

Figure 41 is a Micrograph at 4000x magnification of the 0.4 μm Biopore® PTFE membrane surface. Reference number 17222-65-2, Lot number K3JM2594, Part number SF1R848E1; and

Figure 42 is a Micrograph at 1000x magnification of the 0.4 μm Biopore® PTFE membrane surface. Reference number 17222-65-2, Lot number K2JM2594, Part number SF1R848E1.

Figure 43 is a Micrograph at 30x magnification of the Woven SAATIFIL® polyester membrane surface. Reference number 17222-65-1, Lot number 434180/15/11, Part number PES 290/50 M PW.

It should be understood that various changes and modifications to the presently preferred embodiments described herein will be apparent to those skilled in the art. Such changes and modifications can be made without departing from the spirit and scope of the present invention and without diminishing its attendant advantages. It is therefore intended that such changes and modifications be covered by the appended claims.

WE CLAIM:

1. An implant assembly for a host tissue comprising:

a body including first and second spaced apart membranes and a thermoplastic member for creating a peripheral seal for mechanically coupling the first and the second membranes together, the body having at least one inner chamber disposed between the first and second membranes for holding living cells for implantation in a manner which sustains the viability of the living cells after implantation.

2. The implant assembly of Claim 1 wherein the peripheral seal is defined by at least one overmolded thermoplastic polymer member.

3. The implant assembly of Claim 1 wherein the first and the second membranes are constructed from a material selected from the group consisting of polytetrafluoroethylene, cellulose, cellulose acetate, nylon, polyester, polycarbonate and polyolefin membrane materials.

4. The implant assembly of Claim 1 wherein the first and second membranes comprise polytetrafluoro-ethylene.

5. The implant assembly of Claim 1 wherein the peripheral seal is defined by a melt-fusible polyester.

6. The implant assembly of Claim 1 further comprising at least one spacer member disposed in the cavity intermediate the first and the second membranes.

7. The implant assembly of in Claim 1 further comprising at least one spacer filament disposed in the cavity intermediate the first and the second membranes which is effective to define and maintain a minimum thickness dimension for the cavity defined between the first and second membranes.

8. The implant assembly of in Claim 1 further comprising a peripheral spacer ring disposed in the cavity intermediate the first and second membranes adjacent the peripheral seal which is effective to define and maintain a minimum thickness dimension for the cavity defined between the first and second membranes.

9. The implant assembly of Claim 1 wherein the body further comprises an outer mesh layer on an outer surface of the first and second membranes.

10. The implant assembly of in Claim 9 further comprising an angiogenic material on the outer mesh layer.

11. An implant assembly for a host tissue comprising:

an implantable body including wall means defining at least one chamber for holding cells for implantation, the wall means including first and second membranes disposed in spaced apart relationship and a peripheral seal including a spacer member cooperatively mechanically coupling said first and second membranes and defining and maintaining a minimum thickness dimension for the chamber defined between the first and second membranes.

12. The implant assembly of Claim 11 wherein the first and second membranes are constructed from a material selected from the group consisting of: polytetrafluoro-

ethylene, cellulose, cellulose acetate, nylon, polyester, polycarbonate and polyolefin membrane materials.

13. The implant assembly of Claim 11 wherein the spacer member comprises a generally planar polyester sheet-like material.

14. The implant assembly of Claim 11 wherein the spacer member comprises a non-woven polyester web material.

15. The implant assembly of Claim 11 wherein the membranes are embedded into the surface of the spacer member.

16. The implant assembly of Claim 11 wherein the implantable body further comprises means disposed within the chamber for dividing the chamber into sub-chamber units.

17. The implant assembly of Claim 11 further comprising outer peripheral sealing members disposed over said first and second membranes.

18. The implant assembly of Claim 17 wherein the outer peripheral seal members comprise the same material as the peripheral spacer member.

19. The implant assembly of Claim 17 wherein the outer peripheral seal members comprise a non-woven polyester web material.

20. An implant assembly for a host tissue comprising:

a body including first and second spaced membranes defining an exterior surface having a conformation that

results in growth of vascular structures by the host tissue close to the membrane and a peripheral seal cooperatively mechanically coupling the first and second membranes together and defining an inner chamber between the first and second membranes for holding living cells for implantation in a manner which sustains the viability of the living cells after implantation, and at least one means for defining and maintaining a minimum thickness dimension for the chamber defined between the first and second membranes disposed in the chamber intermediate the first and the second membranes.

21. The implant assembly of Claim 20 wherein the means is removably mounted in the chamber.

22. The implant assembly of Claim 20 wherein the means traverses the chamber.

23. The implant assembly of Claim 20 wherein the means extends between opposing portions of the peripheral seal.

24. The implant assembly of Claim 20 wherein the means comprises a suture material.

25. The implant assembly of Claim 20 wherein the means is a filament selected from the group consisting essentially of: solid core filaments, hollow filaments and hollow filaments having a different material in core spaces thereof.

26. An implant assembly for a host tissue comprising:

an implantable body including first and second spaced membranes and a peripheral seal cooperatively

mechanically coupling the first and second membranes together and defining an inner chamber between the first and second membranes for holding living cells for implantation in a manner which sustains the viability of the living cells after implantation, and an external mesh layer secured to the body outwardly of the first and second membranes and positioned to limit outward displacements of the first and the second membranes thereby defining a maximum thickness dimension for the chamber.

27. The implant assembly of Claim 26 wherein said external mesh layer comprises a polyester mesh.

28. The implant assembly of Claim 1 further comprising at least one port member providing selective access to the chamber.

29. A method for securing at least one membrane to another member comprising:

providing a membrane;

providing a spacer member of a thermoplastic polymer material having a contact surface to which the membrane member is to be secured;

locally heating the contact surface of the spacer member to a melt flow condition; and

securing the membrane to the heated contact surface by contacting the membrane against the locally heated contact surface and applying relative inward pressure so that the membrane member is embedded into the contact surface of the spacer member and the contact surface of the spacer member penetrates into the membrane member, whereby upon cooling, the contact surface of the spacer member forms a strong cooperative mechanical engagement with the membrane.

30. The method of Claim 29 wherein the contact surface of the spacer member is locally heated to a melt flow condition by ultrasonic welding.

31. The method of Claim 29 wherein the contact surface of the spacer member is locally heated to a melt flow condition by radio frequency heating.

32. The method of Claim 29 further comprising the step of affixing the mechanically engaged membrane to another object by securing a second contact surface of the spacer member to the other object.

33. The method of Claim 31 wherein the second contact surface of the spacer member is secured to the other object by adhesive bonding.

34. The method of Claim 31 wherein the second contact surface of the spacer member is secured to the other object by a localized heating method.

35. The method of Claim 29 wherein the membrane is disposed in contact with the contact surface of the spacer member before the localized heating step.

36. The method of Claim 31 wherein the other object is a second membrane member.

37. The method of Claim 35 wherein an external spacer element is disposed against the membrane opposite the contact surface before localized heating and after localized heating inward pressure is applied against the external spacer element to cause melt flow of the surfaces of the external spacer element and the contact surface of the spacer member to cooperatively mechanically bond the

external spacer element to the membrane and to the inner spacer member.

38. A method for making a tissue cavity comprising:

providing a first membrane and a second membrane and positioning them in generally registering abutting face to face contact;

providing a pair of thermoplastic polymer spacer ring members so that they overlay respective edge portions of the positioned first and second membranes; and

heat fusing and embedding the spacer members together and into the edge portions of the first and second membranes to define an overmolded peripheral edge seal cooperatively mechanically coupling the first and second membranes together to define at least one inner cell receiving chamber for holding cells for implantation.

39. A method for making a tissue cavity comprising:

providing a thermoplastic polymer inner spacer member having a generally annular planar configuration with a predetermined thickness dimension and at least one open interior portion and having a pair of opposed major surfaces;

providing a first membrane and a second membrane and positioning them in generally opposing spaced apart registering relationship adjacent the first and second opposed major surfaces of the inner spacer member; and

embedding the first and second membranes into the first and second major surfaces of the inner spacer member, respectively, so that they are cooperatively mechanically engaged therewith to define a membrane-spacer assembly defining at least one inner cell receiving chamber for holding cells for implantation having a minimum thickness dimension generally equal to the predetermined thickness dimension defined between the first and second membranes.

40. The method of Claim 39 wherein the open interior portion of the inner space member includes divider means for subdividing the interior portion into a plurality of sub-chamber units.

41. The method of Claim 39 including the step of providing outer layers of a relatively non-elastic material and affixing them to the membrane-spacer assembly outwardly and adjacent to the first and second membranes to limit outward displacements of the first and second membranes and define a maximum thickness dimension for the assembly.

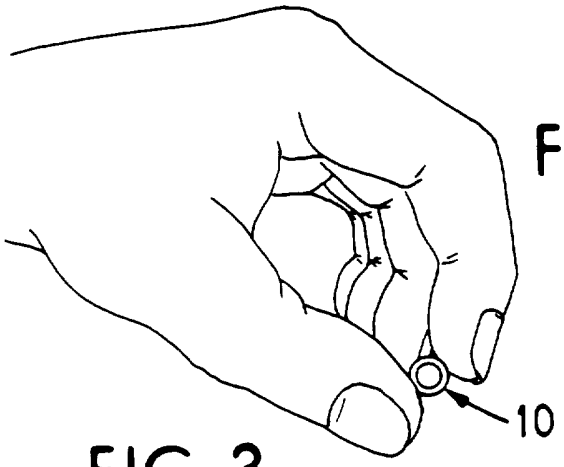

FIG. 1

FIG. 2

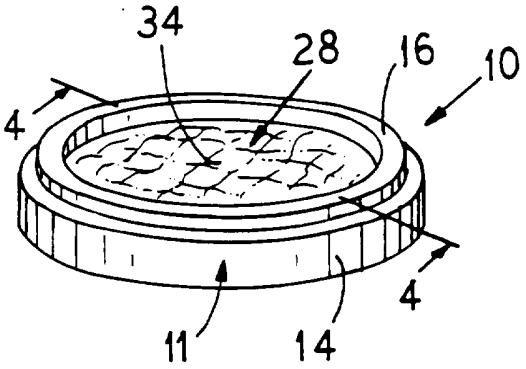

FIG. 3

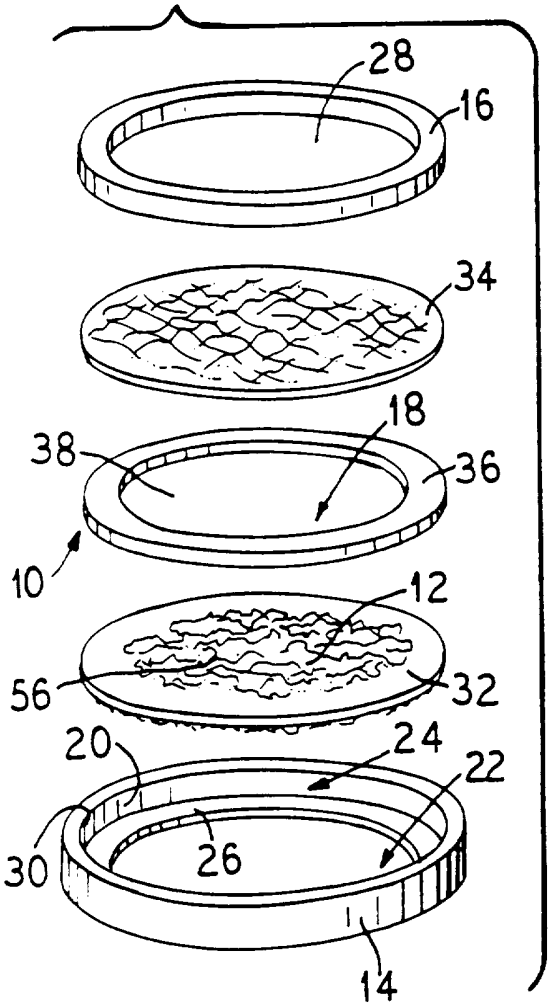

FIG. 4

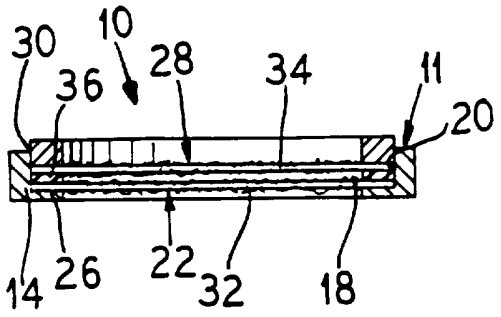

FIG. 5

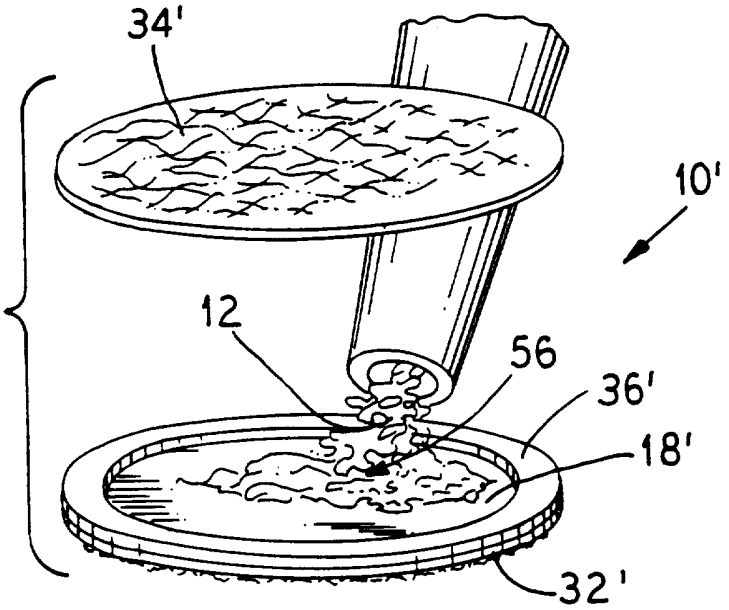

FIG. 6

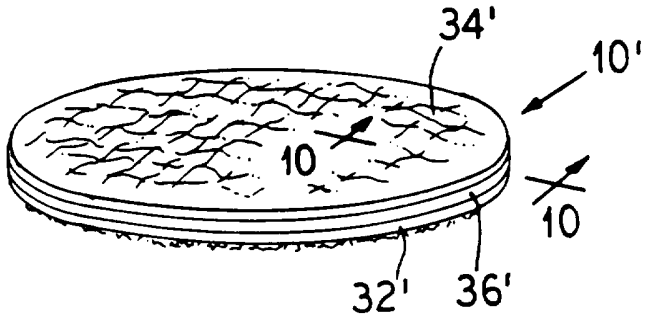

FIG. 7

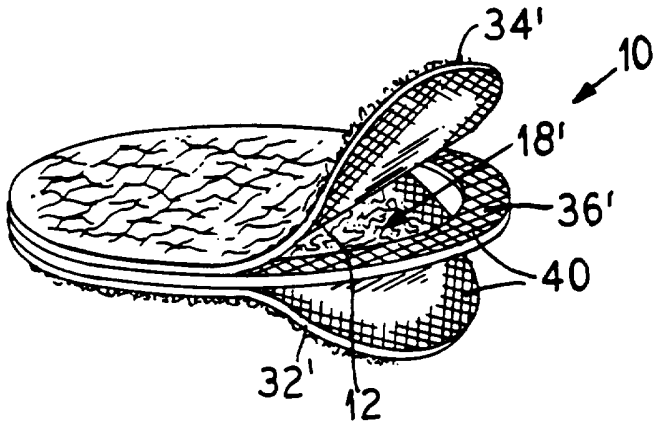

FIG. 8

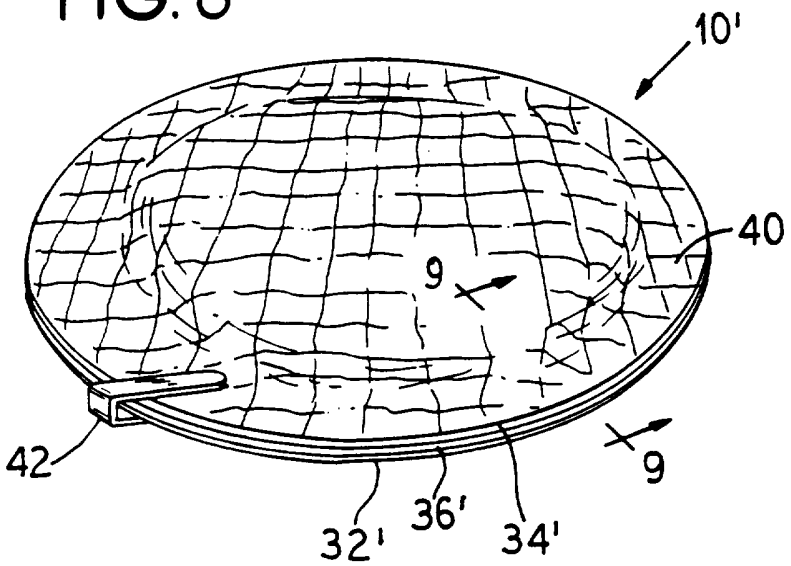
10'
40
9
42
9
32'
36'
34'

FIG. 9

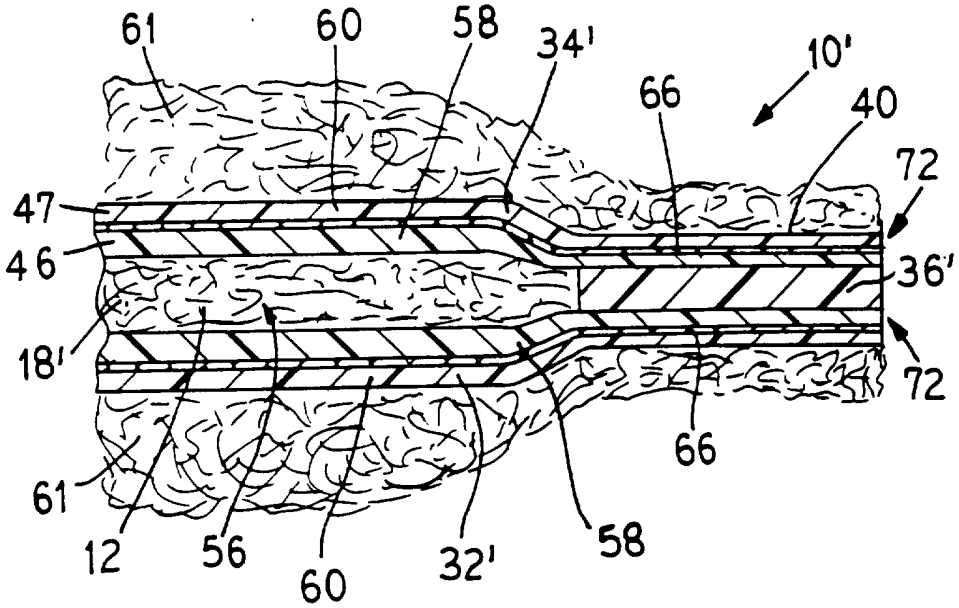
61
60
58
34'
10'
66
40
72
47
46
36'
18'
72
66
61
12
56
60
32'
58

FIG. 10

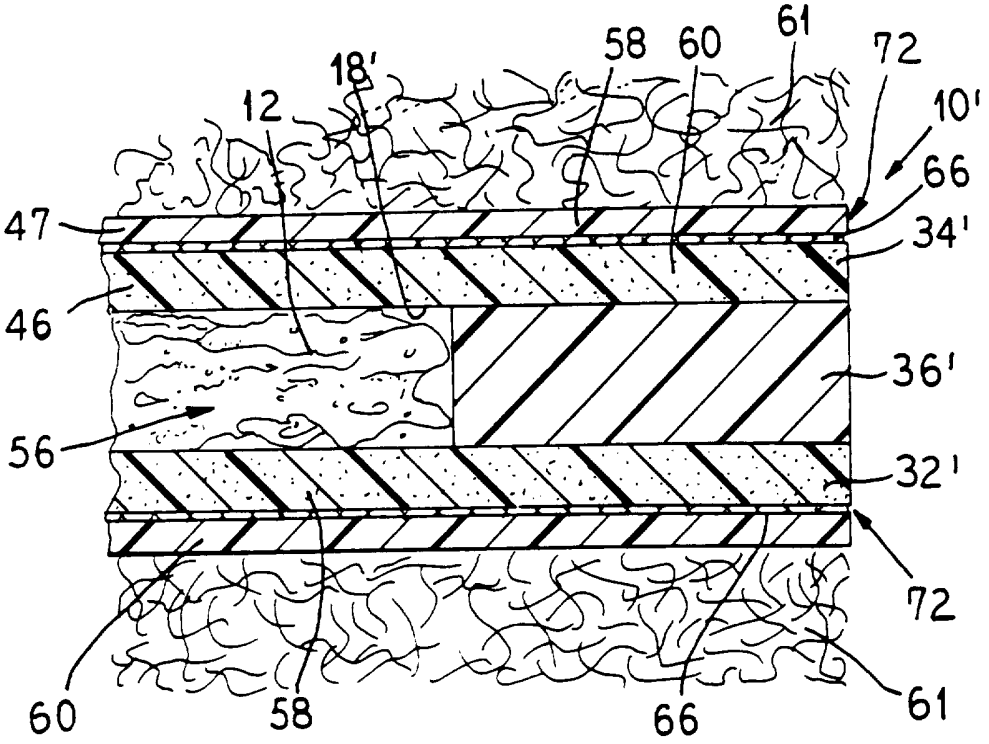

FIG. 11

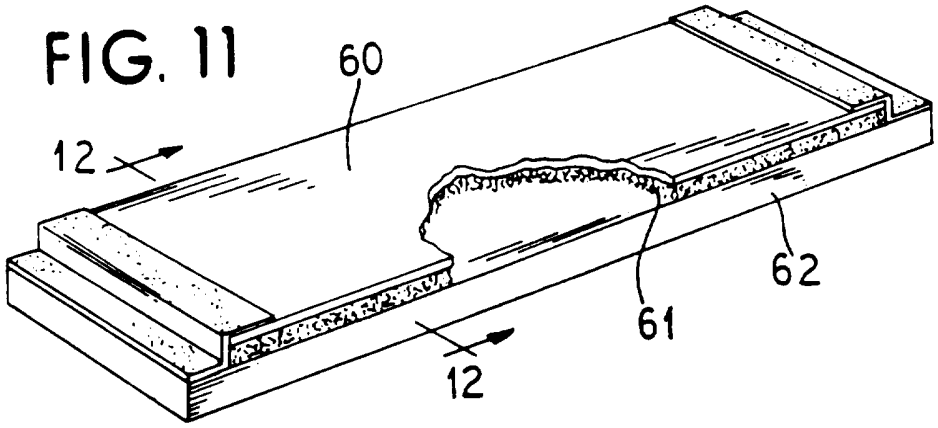

FIG. 12

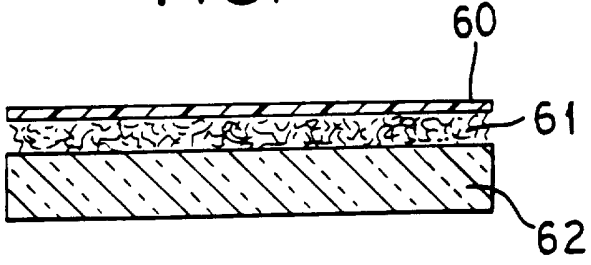

FIG. 13

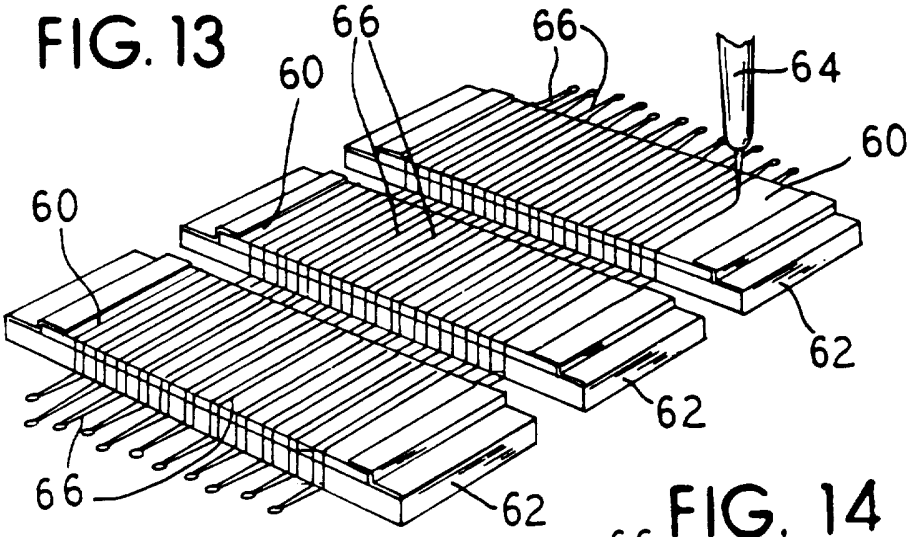

FIG. 14

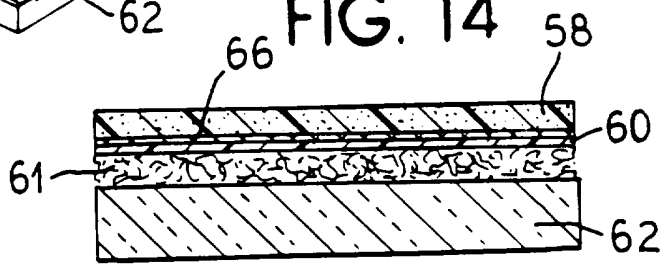

FIG. 15

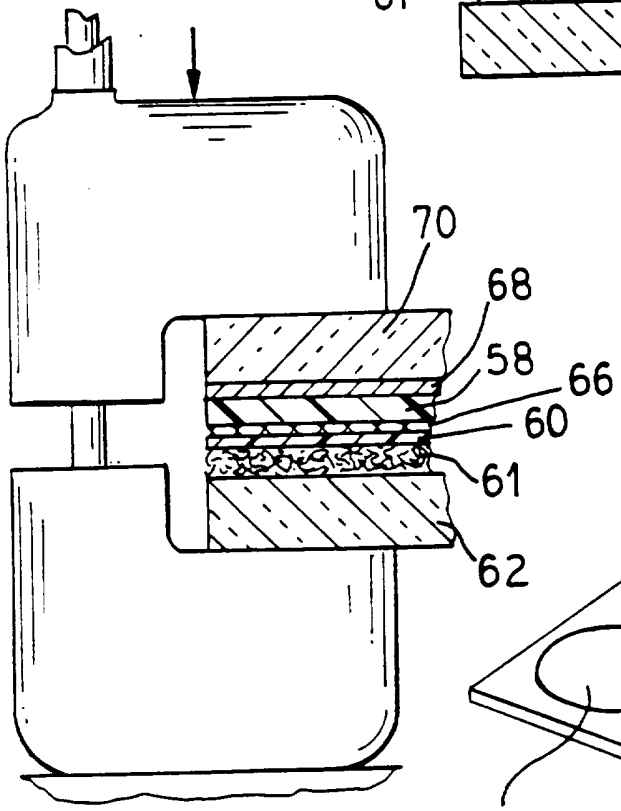

FIG. 16

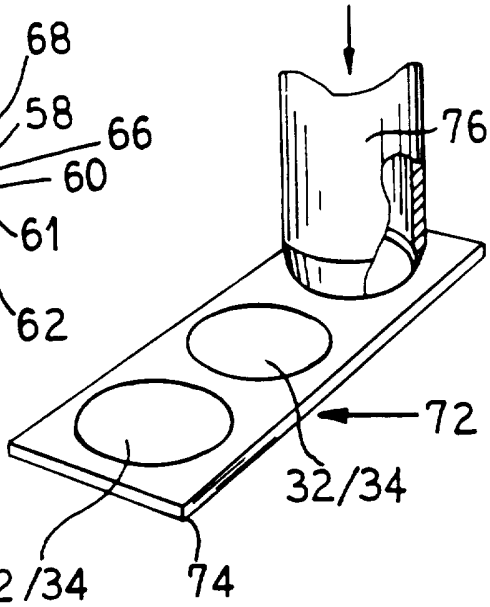

FIG. 17

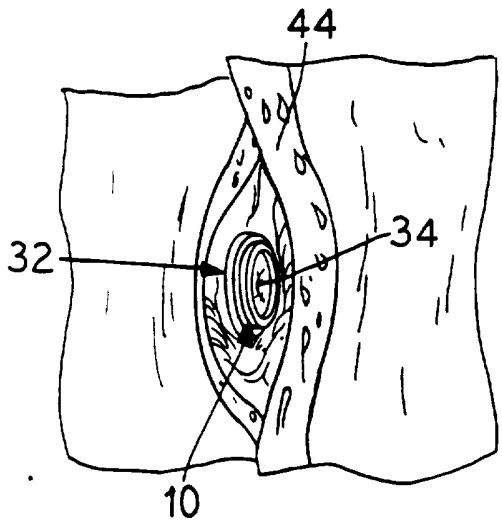

FIG. 18

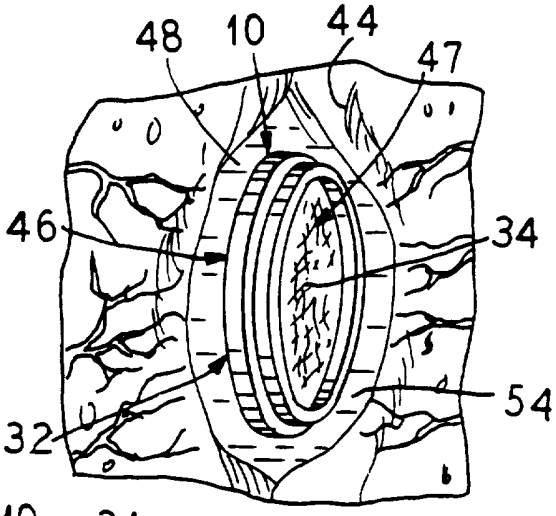

FIG. 19

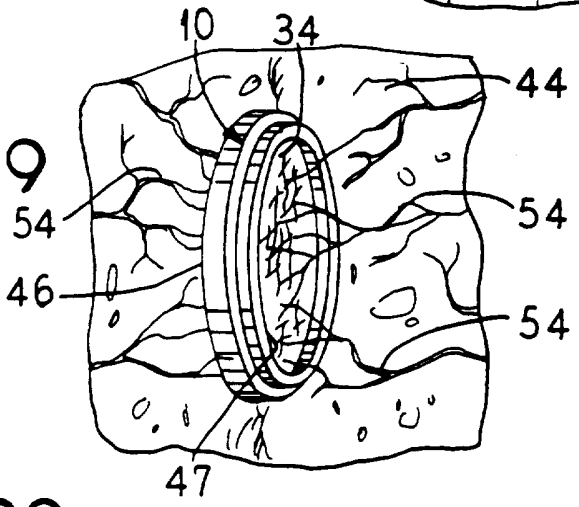

FIG. 20

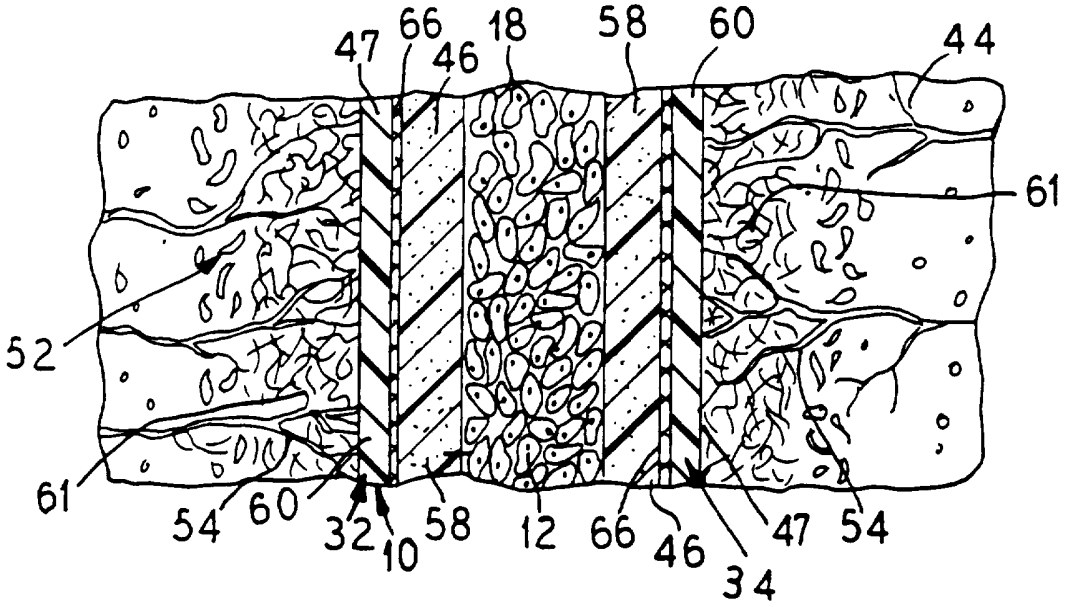

FIG. 21

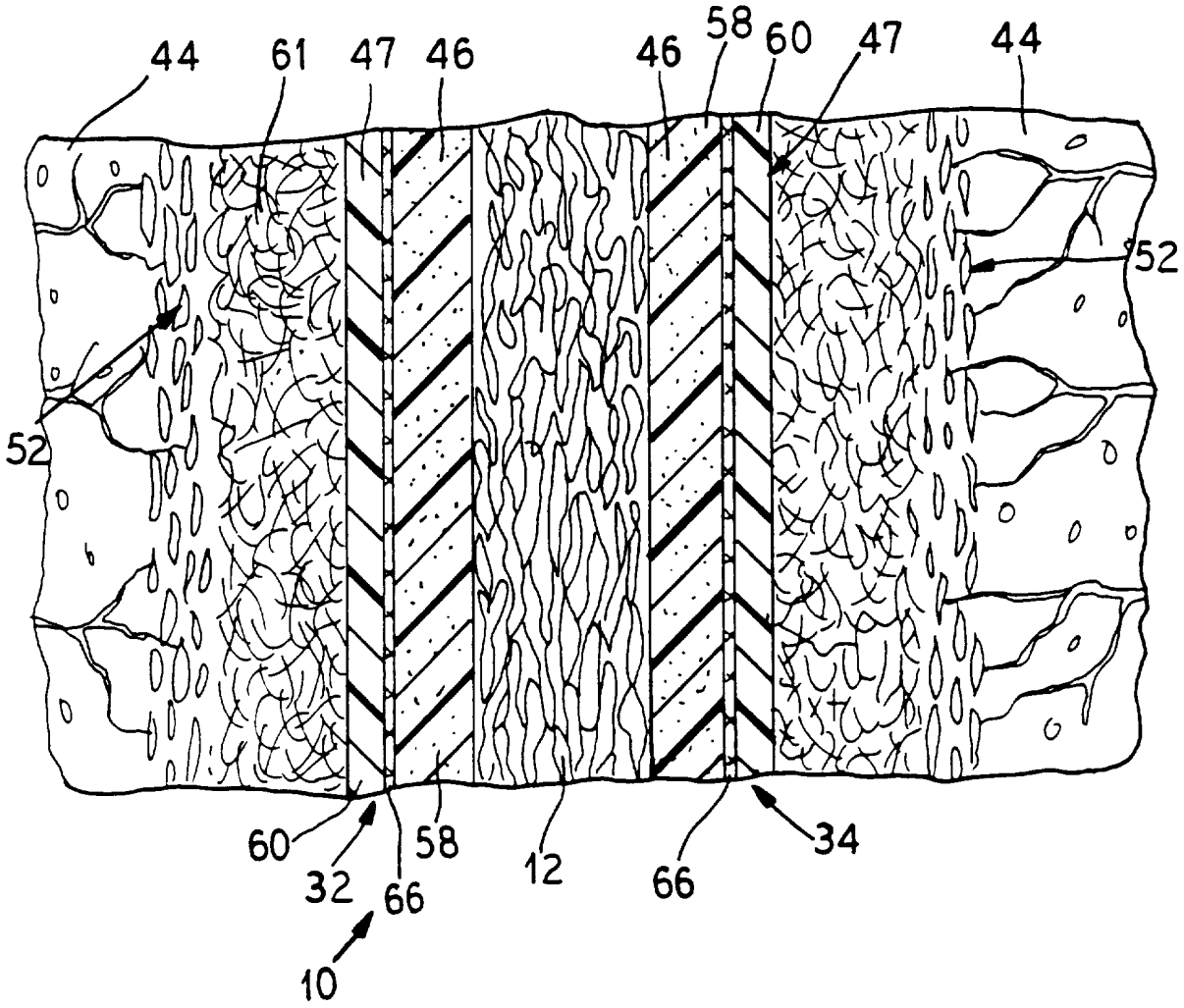

FIG. 22

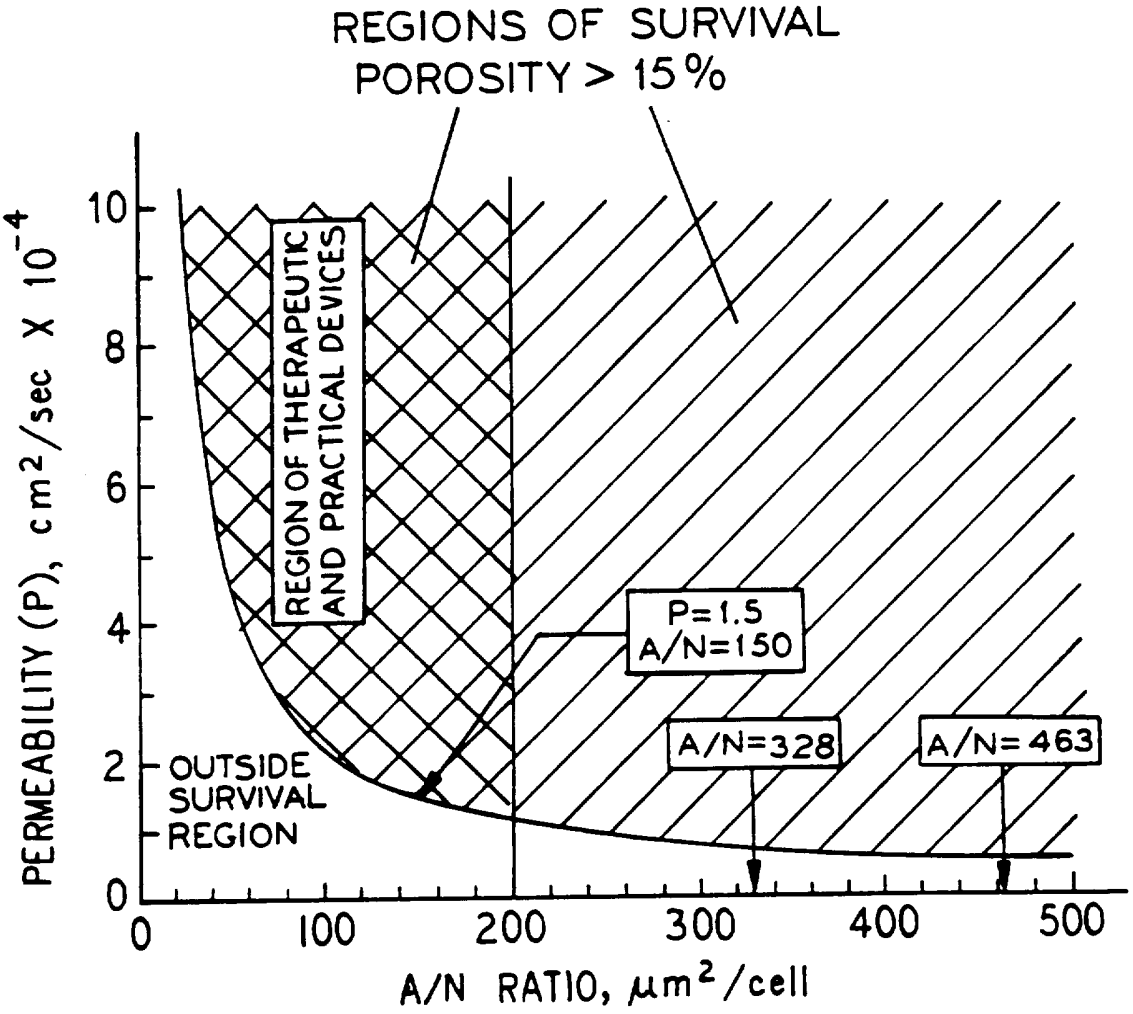
REGIONS OF SURVIVAL
POROSITY > 15%
REGION OF THERAPEUTIC AND PRACTICAL DEVICES
OUTSIDE SURVIVAL REGION
P=1.5
A/N=150
A/N=328
A/N=463
PERMEABILITY (P), cm²/sec X 10⁻⁴
A/N RATIO, μm²/cell
0
2
4
6
8
10
0
100
200
300
400
500

FIG. 23

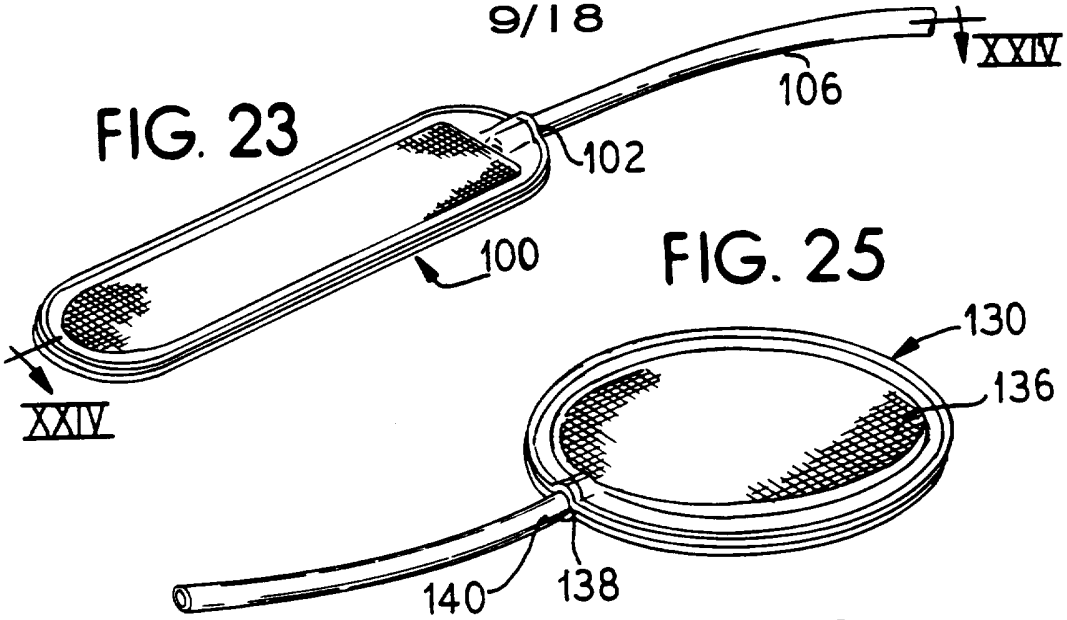

FIG. 25

FIG. 24

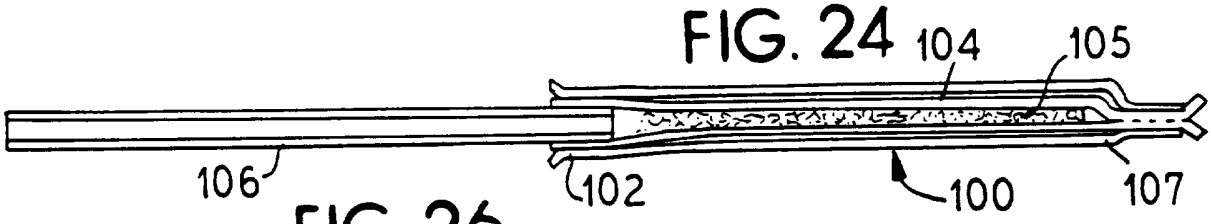

FIG. 26

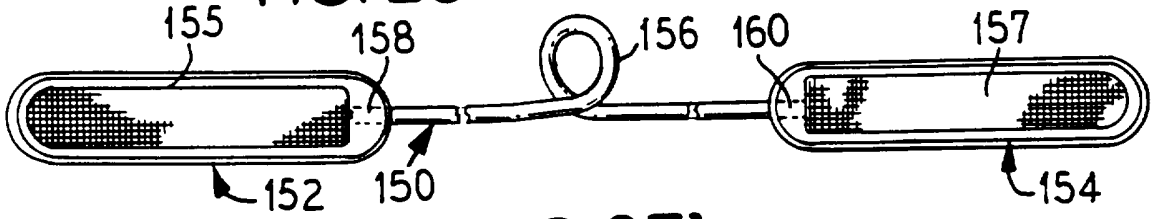

FIG. 27b

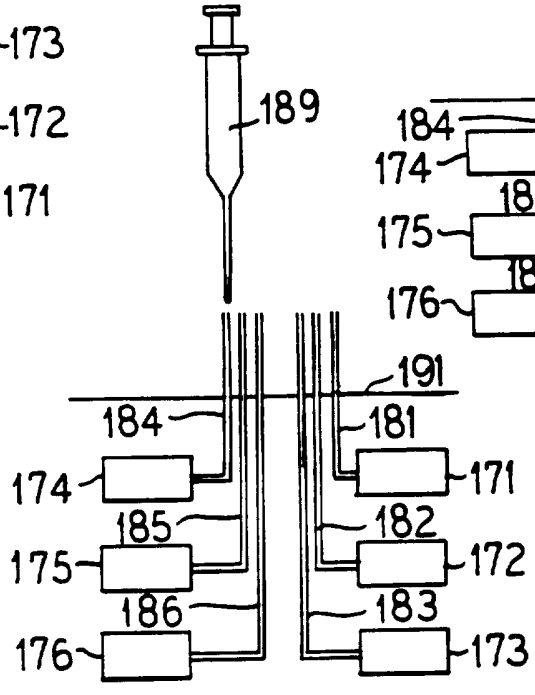

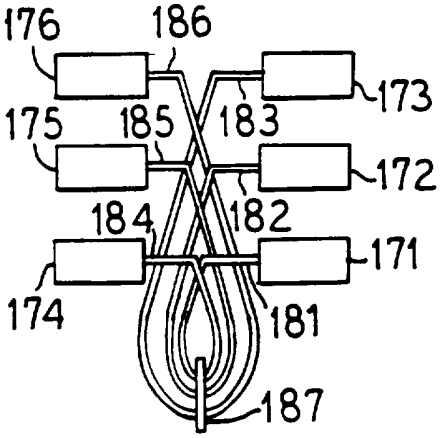

FIG. 27a

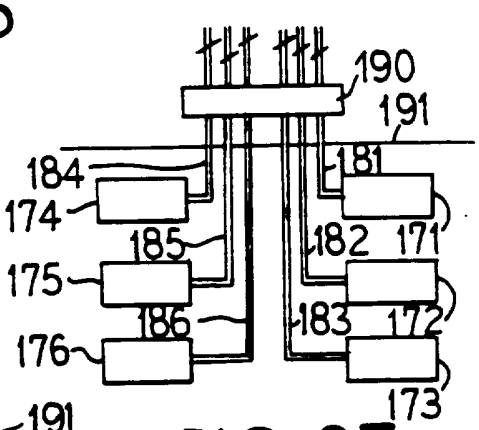

FIG. 27c

FIG. 28

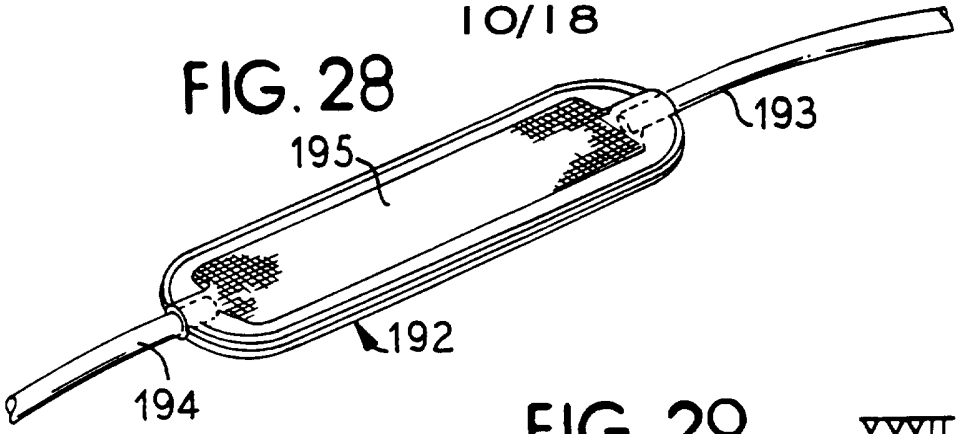

FIG. 29

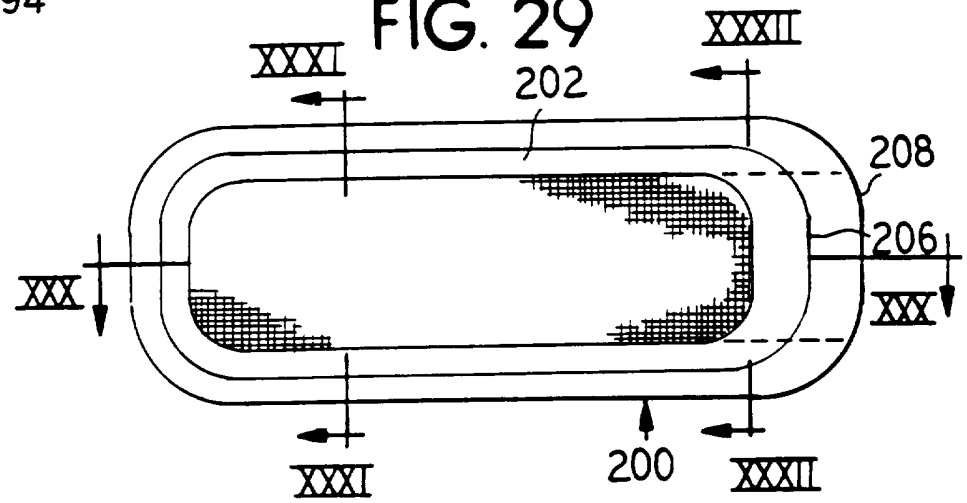

FIG. 30

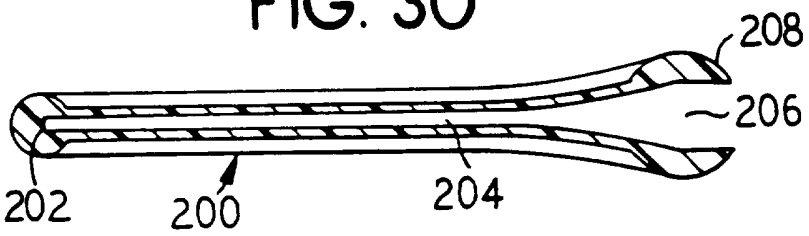

FIG. 31

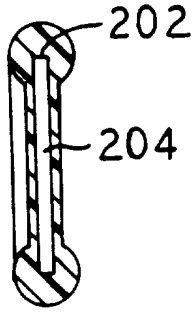

FIG. 32

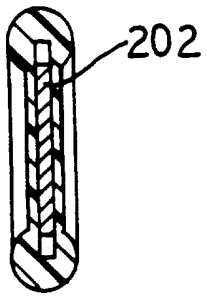

FIG. 33

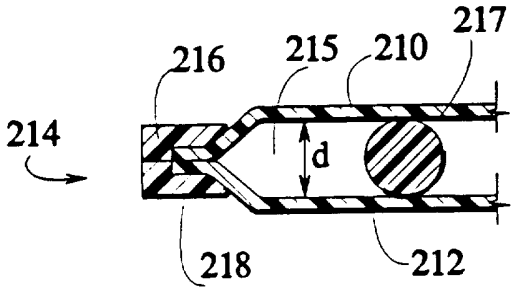
217
216
215
210
214
d
218
212

FIG. 34

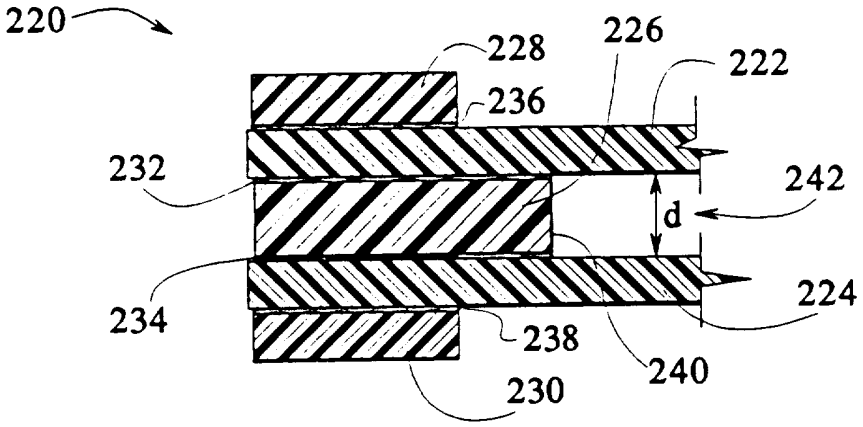
220
228
226
222
236
232
242
d
234
224
238
240
230

FIG. 35

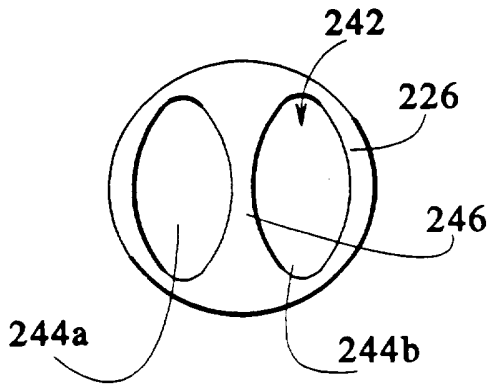

FIG. 36

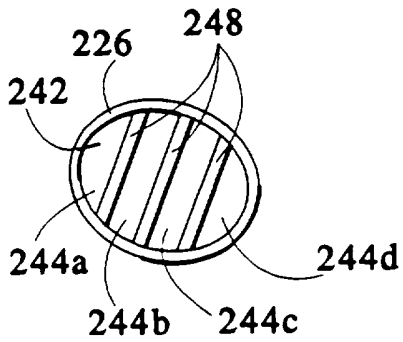

FIG. 37

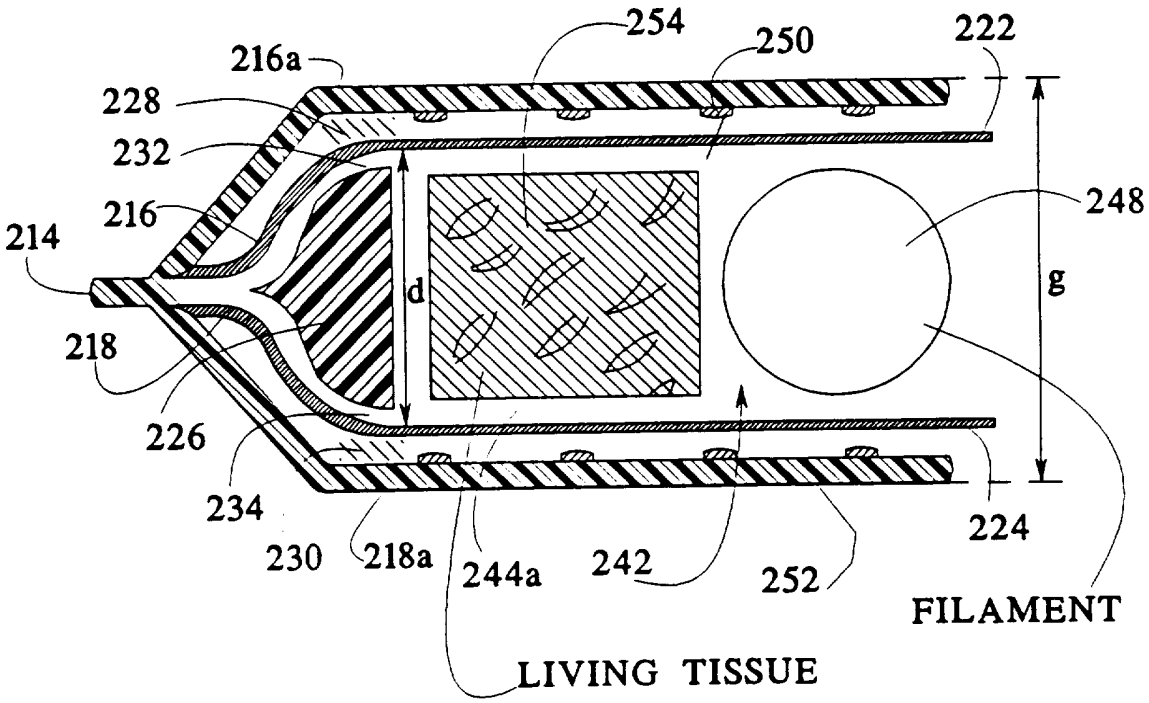

FIG. 38

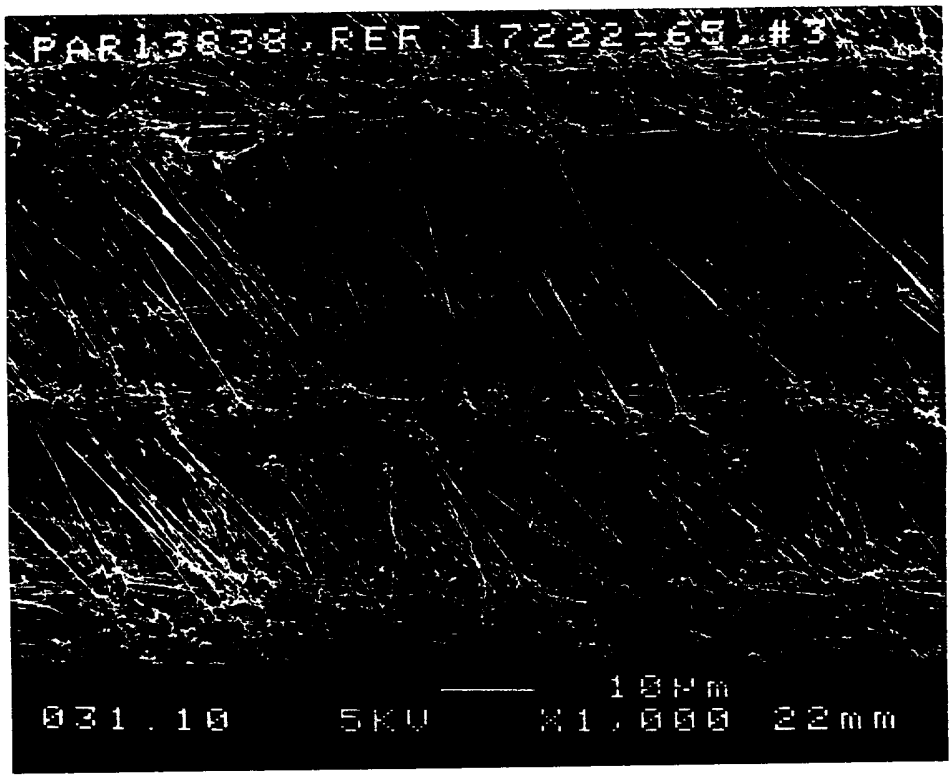

FIG. 39

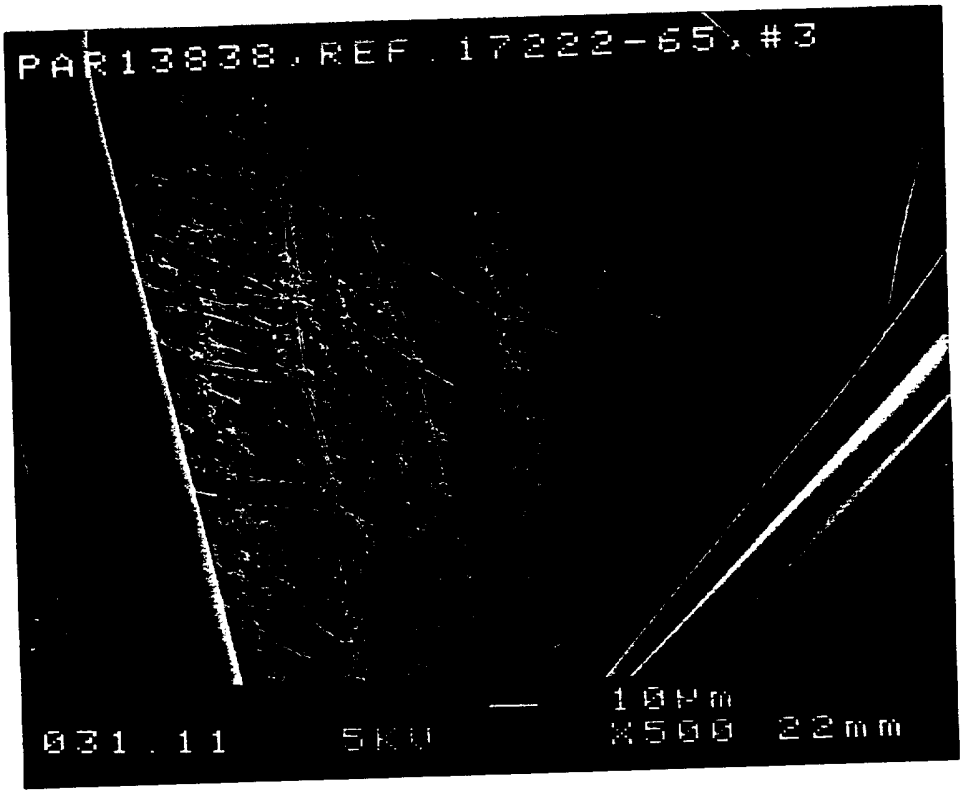

FIG. 40



FIG. 41

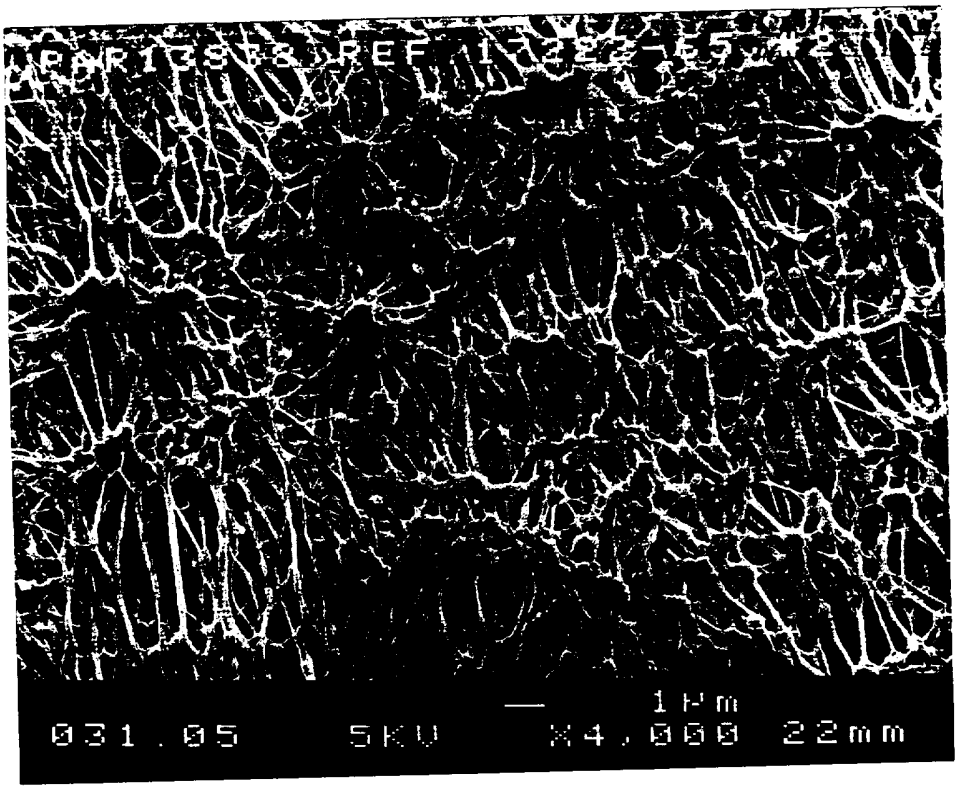

FIG. 42

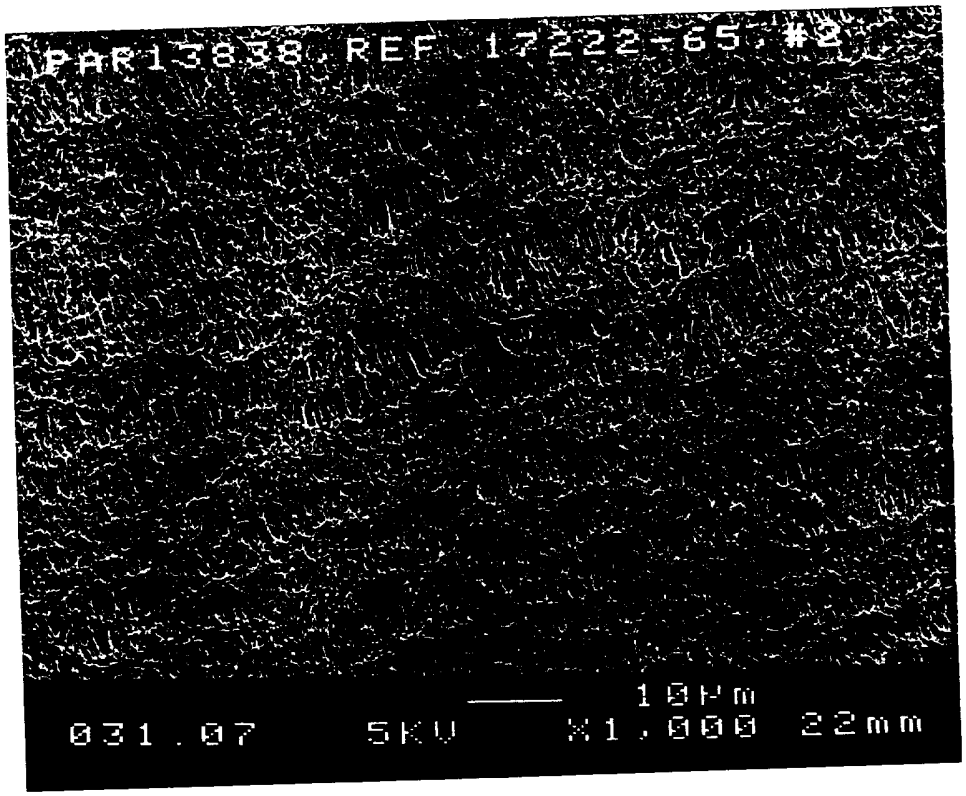

FIG. 43

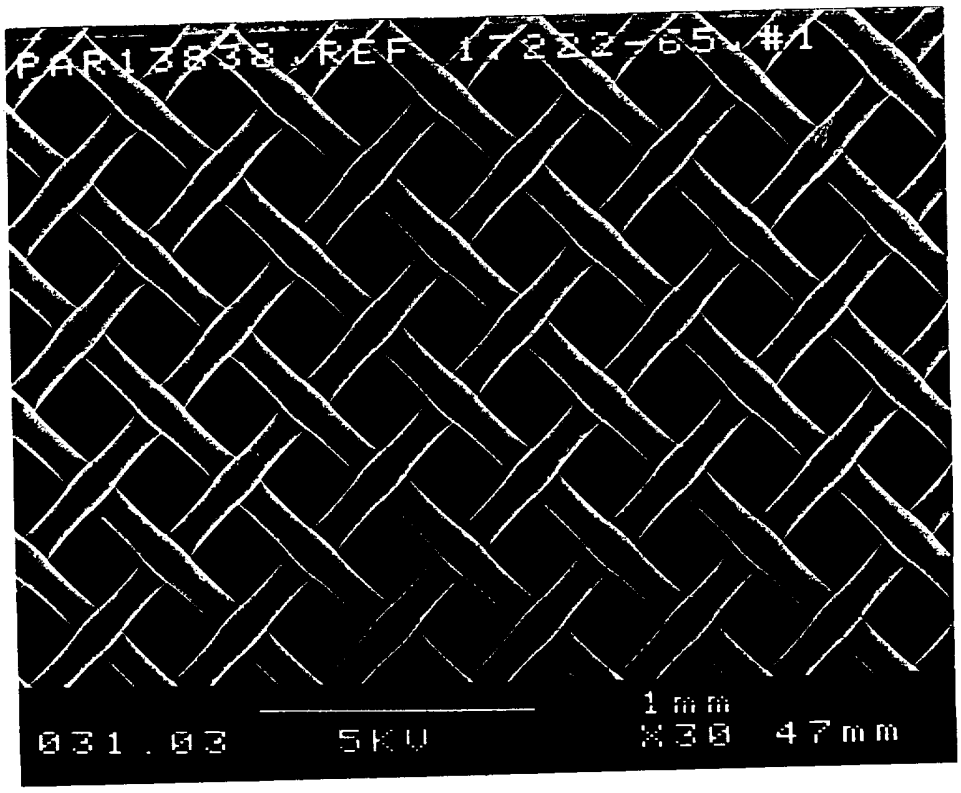

INTERNATIONAL SEARCH REPORT

Inter nal Application No
PCT/US 96/05040

A. CLASSIFICATION OF SUBJECT MATTER
IPC 6 A61F2/02 A61K9/00

According to International Patent Classification (IPC) or to both national classification and IPC

B. FIELDS SEARCHED

Minimum documentation searched (classification system followed by classification symbols)
IPC 6 A61F A61L A61K

Documentation searched other than minimum documentation to the extent that such documents are included in the fields searched

Electronic data base consulted during the international search (name of data base and, where practical, search terms used)

C. DOCUMENTS CONSIDERED TO BE RELEVANT

Category *	Citation of document, with indication, where appropriate, of the relevant passages	Relevant to claim No.
X	WO,A,93 19700 (BAXTER INT) 14 October 1993 see the whole document ---	1-41
X	WO,A,93 19701 (BAXTER INT) 14 October 1993 see the whole document ---	1-41
P,X	WO,A,95 18583 (BAXTER INT) 13 July 1995 cited in the application see the whole document ---	1-41
X	WO,A,93 02635 (BAXTER INT) 18 February 1993 see page 6, line 7 - page 9, line 17; figure 1	11,12, 15,17, 20,23,24
A	---	1,3,4, 6-8
	-/--	

[X] Further documents are listed in the continuation of box C.

[X] Patent family members are listed in annex.

* Special categories of cited documents :

"A" document defining the general state of the art which is not considered to be of particular relevance

"E" earlier document but published on or after the international filing date

"L" document which may throw doubts on priority claim(s) or which is cited to establish the publication date of another citation or other special reason (as specified)

"O" document referring to an oral disclosure, use, exhibition or other means

"P" document published prior to the international filing date but later than the priority date claimed

"T" later document published after the international filing date or priority date and not in conflict with the application but cited to understand the principle or theory underlying the invention

"X" document of particular relevance; the claimed invention cannot be considered novel or cannot be considered to involve an inventive step when the document is taken alone

"Y" document of particular relevance; the claimed invention cannot be considered to involve an inventive step when the document is combined with one or more other such documents, such combination being obvious to a person skilled in the art.

"&" document member of the same patent family

Date of the actual completion of the international search	Date of mailing of the international search report
1 August 1996	09. 08. 96
Name and mailing address of the ISA European Patent Office, P.B. 5818 Patentlaan 2 NL - 2280 HV Rijswijk Tel. (+31-70) 340-2040, Tx. 31 651 epo nl, Fax (+31-70) 340-3016	Authorized officer Neumann, E

Form PCT/ISA/210 (second sheet) (July 1992)

INTERNATIONAL SEARCH REPORT

Inter nal Application No
PCT/US 96/05040

C.(Continuation) DOCUMENTS CONSIDERED TO BE RELEVANT

Category *	Citation of document, with indication, where appropriate, of the relevant passages	Relevant to claim No.
X	WO,A,94 18307 (BRIGHAM & WOMENS HOSPITAL) 18 August 1994 see page 6, last paragraph - page 15, paragraph 2; figures	1,3,4,20
A		9-12,16, 25,39,40

X	WO,A,89 04655 (UNIV BROWN RES FOUND) 1 June 1989 see page 10, paragraph 2 - page 12, paragraph 2; figures	11,12, 20,24
A		1,3,6,8

Form PCT/ISA/210 (continuation of second sheet) (July 1992)

INTERNATIONAL SEARCH REPORT

Information on patent family members

Int. ional Application No
PCT/US 96/05040

Patent document cited in search report	Publication date	Patent family member(s)		Publication date
WO-A-9319700	14-10-93	US-A-	5314471	24-05-94
		CA-A-	2132015	14-10-93
		EP-A-	0633755	18-01-95
		JP-T-	7508187	14-09-95
WO-A-9319701	14-10-93	CA-A-	2132016	14-10-94
		EP-A-	0676935	18-10-95
		JP-T-	8500255	16-01-96
WO-A-9518583	13-07-95	AU-B-	1561095	01-08-95
		CA-A-	2156730	13-07-95
		EP-A-	0688196	27-12-95
WO-A-9302635	18-02-93	EP-A-	0555428	18-08-93
		JP-T-	6502577	24-03-94
		US-A-	5344454	06-09-94
WO-A-9418307	18-08-94	AU-B-	6137994	29-08-94
WO-A-8904655	01-06-89	US-A-	4892538	09-01-90
		AU-B-	2718488	14-06-89
		CA-A-	1335715	30-05-95
		DE-A-	3878918	08-04-93
		EP-A-	0388428	26-09-90
		FI-B-	95284	29-09-95
		JP-T-	3502534	13-06-91
		US-A-	5389535	14-02-95
		US-A-	5487739	30-01-96
		US-A-	5158881	27-10-92
		US-A-	5106627	21-04-92
		US-A-	5283187	01-02-94
		US-A-	5182111	26-01-93
		US-A-	5284761	08-02-94
		US-A-	5156844	20-10-92
		US-A-	5418154	23-05-95