No. 832,536. PATENTED OCT. 2, 1906.

E. COUPE.

KNEE PROTECTOR.

APPLICATION FILED DEC. 18, 1905.

Fig. 1.

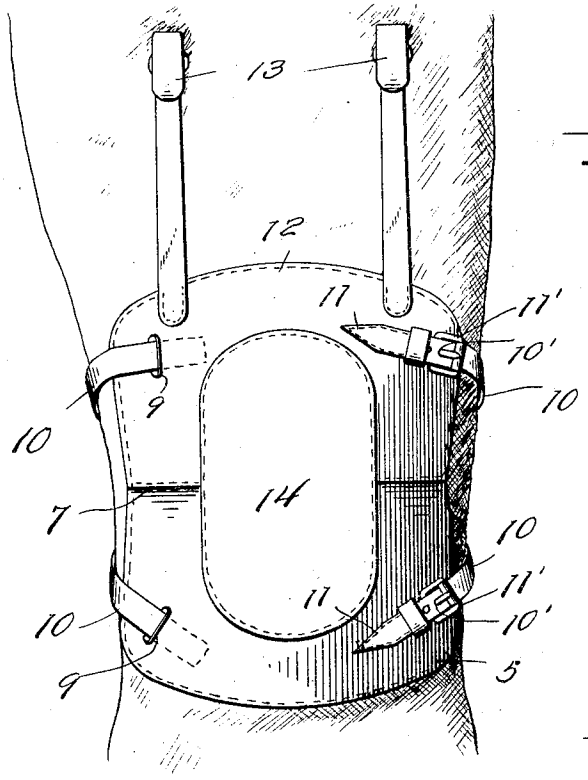

Fig. 2.

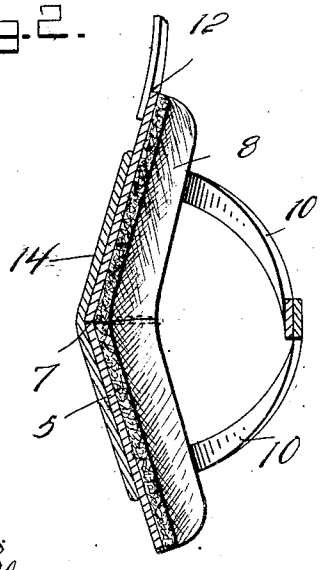

Fig. 3

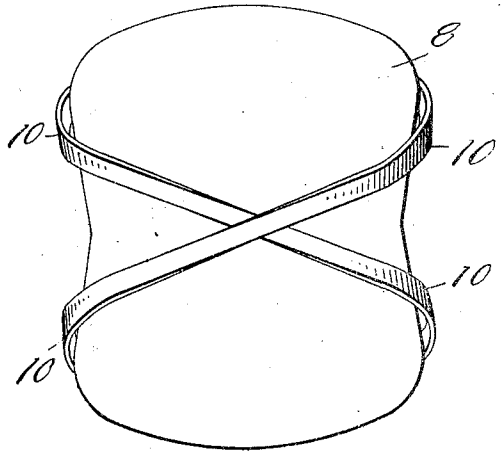

Witnesses
G. R. Thomas
F. C. Jones

Inventor
Edwin Coupe

By Brandlee & Brandlee

Attorneys

UNITED STATES PATENT OFFICE.

EDWIN COUPE, OF ANTRIM, PENNSYLVANIA.

KNEE-PROTECTOR.

No. 832,536. Specification of Letters Patent. Patented Oct. 2, 1906.

Application filed December 18, 1905. Serial No. 292,198.

To all whom it may concern:

Be it known that I, EDWIN COUPE, a citizen of the United States, residing at Antrim, in the county of Tioga, State of Pennsylvania, have invented certain new and useful Improvements in Knee-Protectors; and I do hereby declare the following to be a full, clear, and exact description of the invention, such as will enable others skilled in the art to which it appertains to make and use the same.

This invention relates to knee-protectors.

The object of the invention is to provide a knee-pad which will be composed of few parts, which can be readily and easily adjusted, and which will be provided with means for holding it securely in position.

Other objects and advantages will be apparent from the following description, and it will be understood that modifications of the specific construction shown may be made within the scope of the claim and that any proportions and materials may be used without departing from the spirit of the invention.

In the drawings forming a portion of this specification and in which like numerals of reference indicate similar parts in the several views, Figure 1 is a top plan view of the present invention. Fig. 2 is a longitudinal sectional view of the pad. Fig. 3 is a rear elevation of the pad.

Referring now to the drawings, the present invention comprises a base 5, formed from a blank of leather or other suitable material. The blank is concavo-convex, so as to fit over the knee. To effect this shape, a V-shaped slit is cut in the leather at 7, and the resultant edges are brought together and sewed or otherwise secured. The base 5 has a lining 8 of some yieldable material, so that the harshness of the leather will not cause irritation. It will be understood that the lining may be cut and shaped in a similar manner as the base, this of course depending on the nature of the material employed as a lining.

Openings 9 are formed in the upper face of the base for the reception of straps 10 and 11 for securing the pad to the knee. These straps are of elastic material, so that they will give with the bend of the knee. The straps 11 carry buckles 11′ for engagement with perforations 10′ of the straps 10. To the top 12 of the base are secured other straps of leather or any other suitable material having grips 13 at their ends for engagement of the clothing of the wearer to prevent the pad from slipping from the position in which it is placed.

In order to better effect the purpose of the pad, a cushion 14 is sewed or otherwise secured to the upper face of the base 5 at its center. This cushion may be of leather or any other durable material.

What is claimed is—

A knee-pad comprising a concavo-convex member having openings therein adjacent to one edge, elastic straps secured in said openings, buckles carried by the opposite edge of said member, other straps secured to the upper edge of said member, and grips carried by the second straps and adapted to be engaged with the clothing of the wearer to prevent downward movement of the pad, said concavo-convex member having a yieldable lining secured to its concave face and a cushion secured to its convex face.

In testimony whereof I affix my signature in presence of two witnesses.

EDWIN COUPE.

Witnesses:

CHARLES STENBERG,

FRED SPEAR.