March 26, 1940. B. KLAUSNER 2,195,112

CHARRING DEVICE

Filed Jan. 24, 1939 3 Sheets-Sheet 1

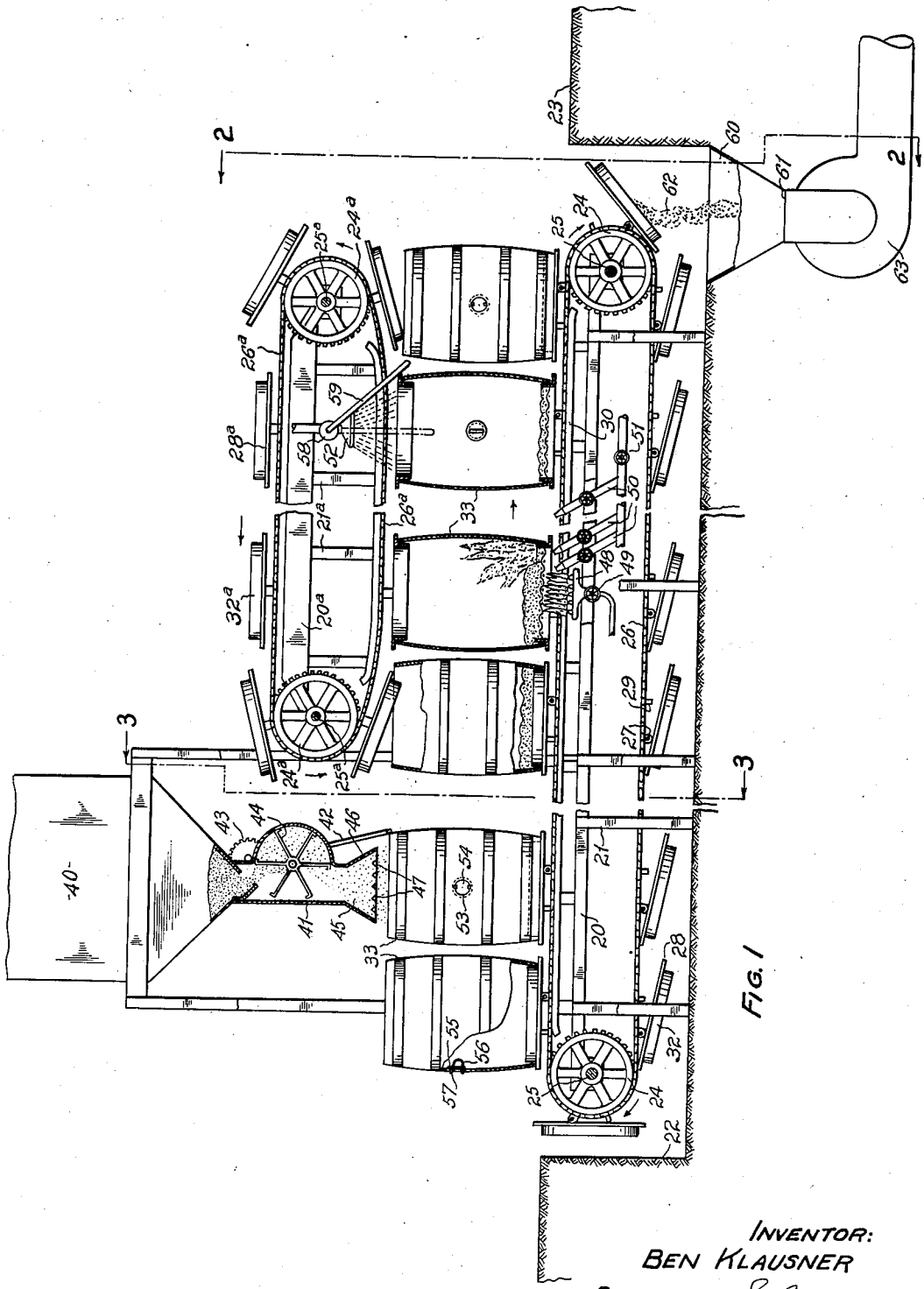

FIG. 1

INVENTOR:
BEN KLAUSNER
BY Morton S. Brockman
ATTORNEY.

March 26, 1940. B. KLAUSNER 2,195,112

CHARRING DEVICE

Filed Jan. 24, 1939 3 Sheets-Sheet 2

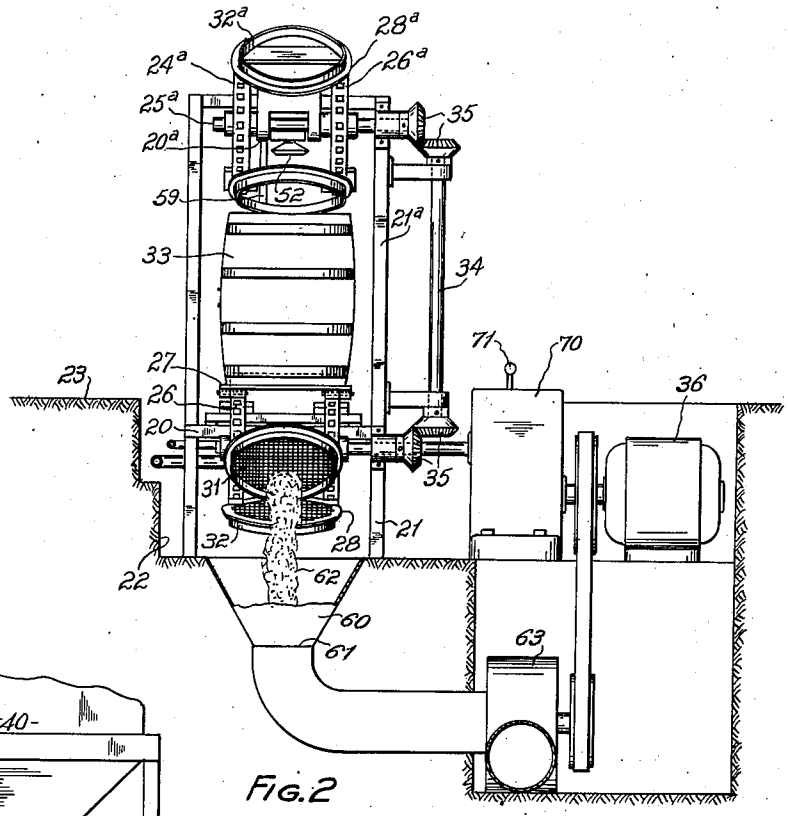

FIG. 2

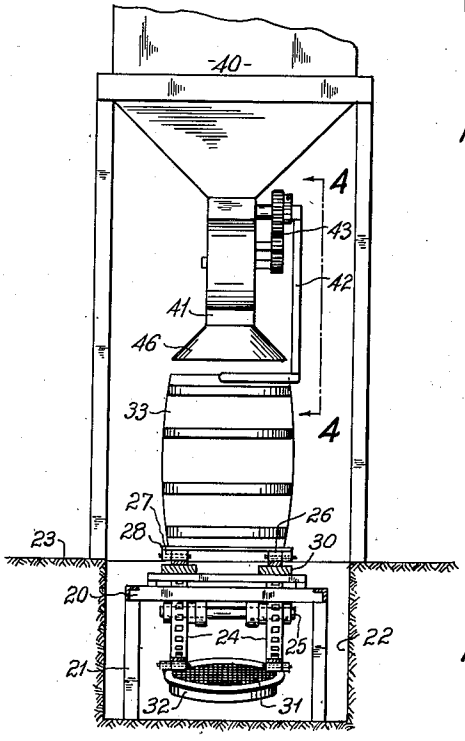

FIG. 3

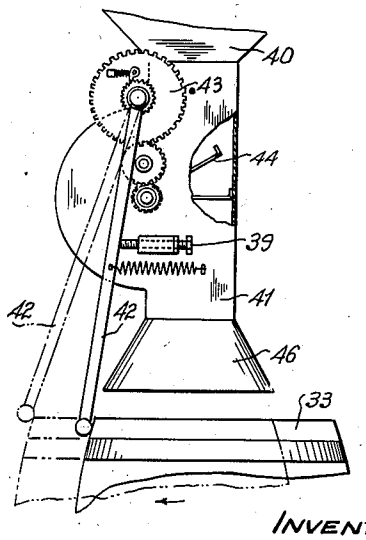

FIG. 4

INVENTOR:
BEN KLAUSNER
BY Morton S. Brafman
ATTORNEY.

March 26, 1940. B. KLAUSNER 2,195,112

CHARRING DEVICE

Filed Jan. 24, 1939 3 Sheets-Sheet 3

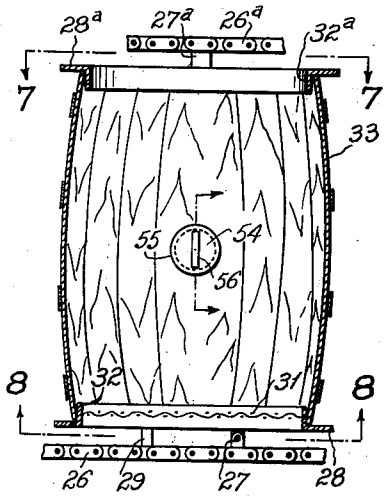

FIG. 5

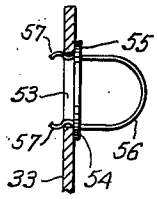

FIG. 6

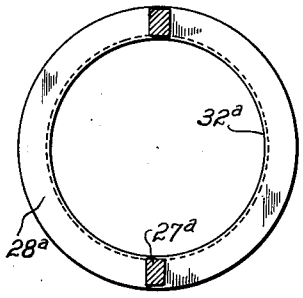

FIG. 7

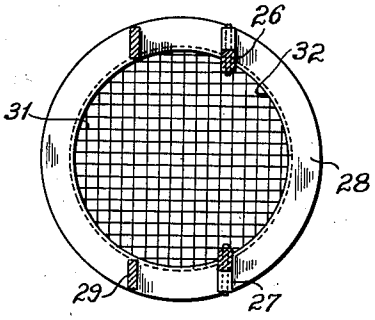

FIG. 8

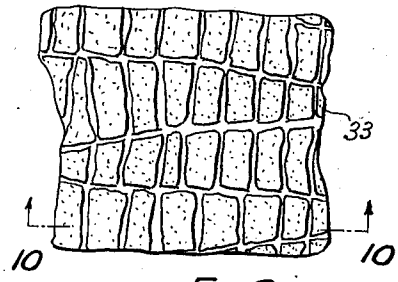

FIG. 9



FIG. 10

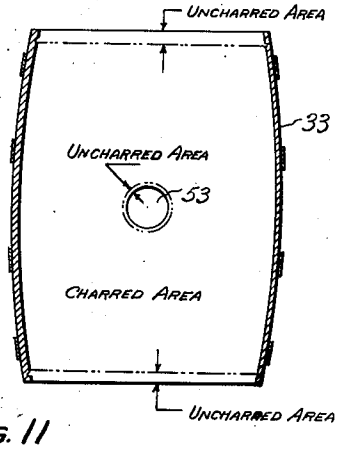

FIG. 11

INVENTOR:
BEN KLAUSNER
BY Morton S. Brockman
ATTORNEY.

Patented Mar. 26, 1940 2,195,112

UNITED STATES PATENT OFFICE

2,195,112

CHARRING DEVICE

Ben Klausner, Shaker Heights, Ohio

Application January 24, 1939, Serial No. 252,703

16 Claims. (Cl. 263—4)

This invention relates to charring devices and particularly to the means employed in firing and charring whisky barrels and similar casks.

As conducive to a clearer understanding of this invention, it may be well to point out that certain alcoholic liquors such as whisky and other spirituous beverages are required to be matured in new charcoal lined casks for certain lengths of time. In the United States, for example, the Federal laws demand that potable whisky be stored in charred barrels for as much as four years in order to properly cleanse and purify the liquid. Charcoal has the property of absorbing the undesirable fusel generally found in fresh whisky and it also prevents the tannic acid of the oak stave from tainting or otherwise affecting the liquor.

It is particularly desirable to have a char that is uniform throughout the entire interior of the barrel; not thick enough to weaken the staves or brittle enough to form ash or carbon sediment. The most desirable kind of char is referred to by the trade as a block-char because of the general rectangular deep-brown crystal like charcoal formations which are comparatively soft, somewhat resilient and which are approximately one-sixteenth of an inch thick.

A char of this type is best produced by burning wood inside the barrel, and the shavings and scraps obtained from the shaping of the staves and heads not only forms an ideal fuel for the purpose but is also the most economical.

Heretofore it has been the practice in charring whisky barrels in quantity and speedily, to use a gas flame or a torch directly against the inside of the barrel. However, it has been found that same of the inflammable gases are absorbed by the raw wood before combustion takes place and are then subsequently burnt inside the pores of the wood. Such combustion lacks sufficient oxygen and the smoldering produces a black friable char which is brittle and easily shaken from the wood.

It is therefore a general object of this invention to provide a device which will wood char the inside of wood casks uniformly, speedily and economically.

Another object is to provide a mechanism which automatically fuels, ignites, shields, burns and cools cask members during a charring process.

A further object of the invention is to provide a charring apparatus with fuel quantity measuring devices and combustion timing and control devices which will facilitate and expedite the uniform charring of wood casks under varied atmospheric and climatic conditions.

These and other objects and features of the invention will become apparent from a reading of the following description and claims together with the accompanying drawings in which like parts are designated by like reference characters and wherein:

Figure 1 is a schematic view of a device embodying this invention;

Figure 2 is a vertical end view of the same device taken along the lines and in the direction of the arrows 2—2 of the Figure 1;

Figure 3 is a vertical sectional view of the device taken along the lines and in the direction of the arrows 3—3 of the Figure 1;

Figure 4 is a side elevation of the fuel feeding mechanism with parts of the hopper broken away to show interior construction. The view is that of 4—4 of the Figure 3;

Figure 5 is a vertical section of a cask showing the application of the heat shielding devices;

Figure 6 is a sectional view of a barrel stave showing a bung hole protector in place. The view taken along the lines 6—6 of the Figure 5;

Figure 7 is a top view of a rim shield only. The view being substantially that of 7—7 of the Figure 5;

Figure 8 is a bottom view of a rim protector and fuel retainer. The view being substantially that of 8—8 of the Figure 5;

Figure 9 is a plan view of a part of the inside surface of a barrel illustrating a preferred type of char formations;

Figure 10 is a cross-sectional view of the Figure 9; and

Figure 11 is a sectional view of a charred barrel member showing protected portions preserved for the addition of the top and bottom heads and the bung attachment.

Broadly this invention consists of an endless chain or conveyor member, a fuel supply or hopper, a combustion member, a shield means or guards and a timed temperature control, all of the said parts or memebrs being mounted on or associated with a supporting frame structure.

The first element of the device to be described herein is the frame structure, which is made up of various lengths and pieces of vertical metal bars and horizontal beams 20 and 21 respectively. Standard stock I beams and conventional channel iron is ideally suited for this construction. The base of the frame rests in a longitudinal concrete pit 22. The pit 22 as well as the contiguous floor surface 23 should be fire and water proof.

The lower part of the frame structure, that is the vertical bars 20 and the beams 21 and especially those contained in the pit 22 form a platform-like structure for the conveyor or barrel retaining mechanism.

The conveyor consists of two pairs of evenly spaced uniform sprocket wheels 24 which engage an endless belt-like member. A pair of wheels is mounted on each end of the horizontal frame beams 21, and each pair of wheels is mounted on parallel axles 25. Across each set of the aligned wheels 24 and engaging the cogs thereon, are parallel endless drive chains 26. Certain special links of the chain 26; for example, like those indicated by the character 27 of the drawings, are constructed so as to swivelly retain on them and between the chains 26 a flat ring 28. Other special links slightly to the rear of the links 27 have leveling lugs or supports 29 attached to them. In order to support the heavy chains 26 and to prevent them from sagging too much, the top extensions of the chains are supported by parallel tracks 30.

The open central portion of each ring 28 is provided with a flat reticulated grating or grille 31; and extending upward for a distance of about three inches from the inner edge of the ring 29 there is a circular collar or flange 32. Each ring 28 is separately pivoted on two links 27 a little off its diameter; and rests, while moving forward, on a pair of supports 29 so that each ring 28 is even and substantially level with the floor 23.

Directly above the bottom conveyor in line and parallel therewith, mounted on the same frame but somewhat shorter and nearer to the forward end of the frame is a second conveyor like member. This second member like the first one described has parallel axles 25*a* mounted on the ends of the horizontal bars 20*a*. The axles 25*a* have sprocket wheels 24*a* mounted thereon and similar endless chains 26*a* extend around the aligned wheels 24*a*. Some of the links 27*a* have pivotally mounted thereon flat rings 28*a* with their attached flange collars 32*a*. The top rings 28*a* need not have the grille members therein nor do the top chains need to have the supporting lugs 29 thereon as is the case with the lower rings 28.

The rings 28 and 28*a* are directly over each other. When closest together they are separated a distance equal to the heighth of a whisky barrel 33. The sprocket wheels 24 and 24*a* are linked together with a suitable drive shaft 34 and gears 35 and are both co-ordinated and synchronously driven by the one motor 36.

Over the uncovered or rear end of the bottom conveyor is a fuel hopper 40 which is filled with a quantity of shavings and wood scraps 45 cut from the formed barrel staves and heads. The neck 41 of the hopper is provided with a quantity measuring and automatic dispensing device. The top brim of the barrel moving along on the bottom conveyor actuates a tensioned arm 42 which arm in turn through the train of gear wheels 43 rotates the vanes 44. The vanes 44 intercept the flow of fuel through the neck 41. The adjustable screw 39 mounted on the side of the hopper 40 restricts or enlarges the movement of the arm 42 thereby regulating the quantity of fuel passed by the vanes 44 with each movement of the arm. The shavings 45 drop downward and are scattered at the flared mouth 46 by the horizontal louvers 47 before settling on the grille 31 at the bottom of the barrel, so that a uniformly loose mass of fuel is in all of the barrels to be charred.

About four or five feet ahead of the hopper 40 and between the parallel tracks 30, a gas jet 48 is installed and attached to the frame members in a manner whereby the flame of the jet 48 can ignite the fuel shavings 45 which were dropped on the grille member 31 by the hopper 40 as the barrel 33 passed over it. The gas jet 48 has several burners and the loosely scattered shavings 45 catch fire in several places almost at once. The gas jet 48 is provided with a conventional valve and handle 49 so that it may be turned out when the apparatus is not in use.

A little to the rear of the gas jet 48 is a row of other jets or nozzles 50 through which air is emitted into the barrel 33 through the grille 31 to assist in the proper combustion of the shavings 45. The nozzles 50 also have valves 51 for regulating the quantity of air injected into the casks and they are longitudinally placed so that air enters each cask constantly while it is being carried along on the conveyor. The sources of the gas and air are not shown in the diagrammatic drawings but they can be supplied by any of the many means long known to the art.

At the end of the row of nozzles 50 and a little above the bottom extension of the chains 26*a* and mounted on the horizontal frame member, is a sprinkler or shower head 52 through which water is sprayed on the inside of the cask 33, extinguishing the fire therein almost immediately and further ceasing the charring of the inside walls. The shower head 52 is provided with a simple spring valve 58 which is actuated by the handle 59 upon its being swung by the forward movement of a ring 28*a* on the barrel 33 below it. The shower 52 like the fuel hopper 40 is only open when a cask is directly under it.

In order to protect the bung hole 53 and to prevent the stave surface adjacent to the hole from being scorched or charred in the process a special shield 54 is used. This shield 54 consists of a circular disk 55 slightly larger than the diameter of the bung hole itself. One side of the disk 55 is provided with a simple handle 56 and the other side is provided with two spring catches or clips 57, which when inserted in the bung hole 53 tension and engage the sides thereof. In construction the clips 57 and the handle 56 may be made of a short piece of bent wire each end of which projects through two holes in the disk 55.

At the rear end of the pit 22 there is a sewer-like drain 60 which has a funnel like neck 61 into which the burnt wood ashes 62 drop when the rings 28 are caused to tip upon reaching the rear sprocket wheels 24. A blower 63 is associated with the drain 60 so that the waste material is carried off and automatically disposes of it a distance from the apparatus itself and in any convenient manner.

The sprocket wheels 24 are driven by a conventional motor 36, as is also the blower 63, but between the motor 36 and the sprocket wheels 24 there is inserted a variable speed transmission or some other speed control device. Speed control devices of many kinds are old to the art and the element is herein indicated by the character 70, without showing details of its structure. The control device 70 however must be equipped with a lever, such as indicated by the character 71 for conveniently regulating and adjusting the speed of the conveyor.

The apparatus, to be prepared for operation requires the starting of the motor 36; the setting of the transmission handle 71 at an estimated

or approximate speed needed. Next the gas jet 48 is turned on, ignited and adjusted so that its flame reaches and ignites the fuel 45 on the grilles 31. The air supply is turned on and adjusted. The water supply for the shower 52 is turned on and the hopper is filled with shavings and small bits of wood referred to as the fuel 45. Finally the fuel quantity adjustment screw 39 is arbitrarily set to provide an estimated quantity of fuel. None of the foregoing steps need be taken in exactly the sequence set forth but may be made as convenient under the circumstances. After all these steps have been taken the conveyor chains will be moving in the direction indicated by the arrows in the drawings and the blower 63 will be creating a suction in the drain 60.

To use the device, a cask member 33 is prepared for charring by inserting on its inside surface at the bung hole the shield 54 which was previously described. The cask member is manually placed on one of the moving rings 28 so that the flange 32 extends upward on the inside of the barrel and shields the edge against charring, burning or even discoloring when combustion takes place therein. The cask then passes under the fuel hopper 40 and a quantity of fuel 45 is automatically dropped into it in the manner heretofore mentioned. The conveyor then carries the cask to a position under the first pair of sprocket wheels 24*a* where a top ring 28*a* and its attached downwardly extending flange 32*a* engages the top brim of the cask member 33. The top flange 32*a*, like its co-related bottom flange 32 serves to shield the top edge of the cask member so that the head section may be more easily and satisfactorily installed later.

Further movement of the cask member 33 as it is now shielded brings it over the gas jet 48 where the flame ignites the fuel 45. The burning cask is then carried on the conveyor for a distance of about twelve feet with the row of air nozzles 50 injecting air into the cask member for practically the entire distance. Continued movement of the conveyor brings the member under the water shower head 52 where the fire in the cask is quickly extinguished and the top ring 28 removed from the member. The charred cask is next manually lifted from the bottom ring 26 and the bung hole shield 54 removed. The ash residue or debris on the grille 31 is dropped in the drain 60 and the rings 28 and 28*a* return to the other end of the conveyors for further use as mentioned.

It has been found in practice that on dry hot days the fuel 45 burns faster than on cool humid days. Therefore, the various adjustments herein mentioned have been provided to compensate for the weather conditions as well as for charring as desired. If a light char is desired, the conveyor is speeded up or the quantity of air admitted through the nozzles is decreased. If too much of the fuel 45 remains unburnt the hopper member may be adjusted to suit the needed requirements. It has also been found that with proper adjustment a cask member may be properly charred in about one minute. After a few cask members have been run through the machine as a test, it is a comparatively simple matter to make the necessary adjustments to compensate for the varied atmospheric conditions so that all the subsequently treated barrels will have a uniform and highly satisfactory char.

It will now be clear that there is provided by this invention a charring device which accomplishes the objects of the invention. While the invention has been described in a specific form and while certain general terms and specific language have been used it is to be understood that the embodiment of the invention as described is only suggestive and is not to be considered in a limiting sense. It is to be further understood that there are other forms or adaptations of this invention which will suggest themselves to persons familiar with the art and those modifications as well as the modifications of the illustrated form are all considered to be within the broad scope of the invention as no limitations upon this invention are intended other than those imposed thereon by the scope of the appended claims.

I claim:

1. A device of the class described, comprising in combination, a supporting frame, a cask conveyor mounted on the frame, a combustion device mounted on the frame for charring a cask carried by the conveyor, and a water sprinkling means attached to the frame and activated by the conveyor for quickly extinguishing the combustion device.

2. A device of the class described, comprising in combination, a frame, a conveyor supported on the frame for moving cask members thereon, a means adjacent to the said frame for automatically supplying a fuel to the cask members, a means mounted contiguous to the conveyor for igniting the fuel in the cask members, and an extinguisher mounted on the frame for automatically quenching the burning fuel.

3. A device of the class described, comprising in combination, a frame, a conveyor supported on the frame for moving cask members thereon, a means adjacent to the said frame for automatically supplying a fuel to the cask members, a flame under the said conveyor for igniting the fuel in the cask members, a shielding means engageable with the cask members for restricting the action of the burning fuel, and an extinguisher mounted on the frame for automatically quenching the burning fuel.

4. A device of the class described, comprising in combination, a frame, a conveyor supported on the frame for moving cask members thereon, a fuel hopper having means for automatically supplying a measured quantity of fuel to the moving cask members, a controllable combustion means for burning the fuel in the cask members, and an automatic extinguisher mounted on the said frame for subsequently quenching the burning fuel.

5. A device of the class described, comprising in combination, a frame, a conveyor supported on the frame for moving cask members thereon, a fuel hopper having means for automatically supplying a measured quantity of fuel to the moving cask members, a controllable combustion means for burning the fuel in the cask members, a shielding means engageable with the cask members for restricting the action of the burning fuel, and an automatic extinguisher mounted on the said frame for subsequently quenching the burning fuel.

6. A device of the class described, comprising in combination, a frame having means for supporting a cask member thereon, a fuel hopper associated with the frame, the said hopper having means for automatically supplying a measured quantity of fuel to the said cask member, a controllable combustion means igniting and burning

the fuel in the cask member, and an automatic extinguisher mounted on the said frame for subsequently quenching the burning fuel.

7. A device of the class described, comprising in combination, a frame having means for supporting a cask member thereon, a fuel hopper associated with the frame, the said hopper having means for automatically supplying a measured quantity of fuel to the said cask member, an ignition device mounted on the frame causing the said fuel to burn, and shield members engageable with the said cask member restricting the action of the burning fuel.

8. In a charring device, a cask member support, comprising in combination, a frame structure, a first endless conveyor mounted on the bottom of the frame structure, a second endless conveyor mounted on the top of the frame structure, pairs of co-acting shield members connected to the said conveyors simultaneously engaging the top and bottom ends of a cask member, and a common drive means for synchronously moving both of the said conveyors.

9. In a charring device, a cask member support, comprising in combination, a frame structure, a controllable bottom conveyor mounted on the frame structure, a first set of flanged rings swivelly connected to the bottom conveyor the first set of flanged rings having means for retaining a fuel therein, a synchronized top conveyor mounted on the frame structure, and a second set of flanged rings swivelly connected to the top conveyor and co-ordinately coacting with the first set of rings.

10. In a charring device, a cask member support, comprising in combination, a frame structure, a bottom conveyor mounted on the frame structure, a first set of flanged rings connected to the bottom conveyor, the first set of rings having grilles therein, a top conveyor mounted on the frame structure, a second set of flanged rings connected to the top conveyor, and a means for co-ordinating and regulating the movements of the said rings.

11. A device of the class described, comprising in combination, a supporting frame having a means for temporarily retaining a cask member thereon, a charring device mounted on the said frame, the said charring device effecting the inside of the cask member at a predetermined time, and a water sprinkling apparatus mounted on the said frame, the said apparatus affecting the inside of the cask member at a predetermined time.

12. A device of the class described in claim 11 characterized by having shield members engageable with the cask member for restricting the action of the charring device.

13. A device of the class described, comprising in combination, a supporting frame, a conveyor mechanism mounted on the frame and temporarily retaining cask members thereon, a charring device mounted on the said frame and effecting the inside of the cask members, a water sprinkling apparatus mounted on the said frame and effecting the inside of the cask members, and a means for moving the said conveyor in a manner whereby the cask members are affected by the charring device and the sprinkling apparatus at predetermined times.

14. A device of the class described in claim 13 characterized by the conveyor mechanism having shield members engageable with the cask members for restricting the action of the charring device.

15. In a charring device, a cask member support, comprising in combination, a frame structure, a pair of synchronized endless conveyors mounted on the frame structure, and pairs of co-acting shield members hingedly connected to the said conveyors in a manner whereby cask members may be retained and carried therebetween.

16. In a charring device, a cask member support, comprising in combination, a frame structure, synchronized endless conveyors mounted on the frame structure, pairs of co-acting cask rim heat shield members connected to the said conveyors retaining and carrying cask members therebetween, and a means for controlling the speed of the said conveyors whereby the said cask members are retained for a definite period of time.

BEN KLAUSNER.