(19) Europäisches Patentamt
European Patent Office
Office européen des brevets

(11) **EP 4 276 356 A1**

(12) **EUROPEAN PATENT APPLICATION**

(43) Date of publication:
15.11.2023 Bulletin 2023/46

(21) Application number: **22172232.5**

(22) Date of filing: **09.05.2022**

(51) International Patent Classification (IPC):
F23N 5/24 *(2006.01)* ***F23D 14/02*** *(2006.01)*
F23N 1/02 *(2006.01)* ***F16K 37/00*** *(2006.01)*

(52) Cooperative Patent Classification (CPC):
F23N 5/242; F16K 37/0025; F23D 14/02; F23N 1/022; F23C 2900/9901; F23K 2400/201; F23K 2900/05001; F23K 2900/05002; F23N 2221/10; F23N 2235/14; F23N 2235/24; F23N 2239/04; F23N 2241/06

(84) Designated Contracting States:
AL AT BE BG CH CY CZ DE DK EE ES FI FR GB GR HR HU IE IS IT LI LT LU LV MC MK MT NL NO PL PT RO RS SE SI SK SM TR
Designated Extension States:
BA ME
Designated Validation States:
KH MA MD TN

(71) Applicant: **BDR Thermea Group B.V.**
7332 BD Apeldoorn (NL)

(72) Inventors:
- **RUTGERS, Job**
  7332 BD Apeldoorn (NL)
- **KAPUCU, Mehmet**
  7332 BD Apeldoorn (NL)

(74) Representative: **Dennemeyer & Associates S.A.**
Postfach 70 04 25
81304 München (DE)

(54) **METHOD FOR CONTROLLING THE OPERATION OF A COMBUSTION APPLIANCE**

(57) Method (100) for controlling the operation of a combustion appliance (1), in particular a gas boiler, the combustion appliance (1) being operated based on setting parameters, which are set up based on at least predefined information data on a gas valve (2), the method (100) comprising receiving (S101) a valve signal (13) from a gas valve (2) of the combustion appliance (1), the valve signal (13) comprising actual information data with respect to the gas valve (2), comparing (S102) the actual information data with the predefined information data with respect to the gas valve (2), and modifying (S103) the operation of the combustion appliance (1) when the actual information data are different from the predefined information data.

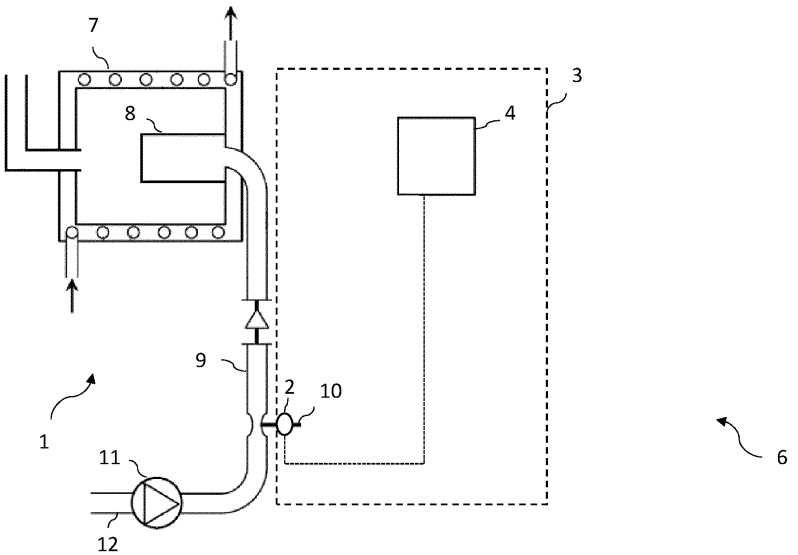

FIG. 3

EP 4 276 356 A1

Description

[0001] The invention relates to a method for controlling the operation of a combustion appliance, in particular a gas boiler. Additionally, the invention relates to a control system for controlling the operation of said appliance and to a heating system comprising said control system as well as a use of the control mechanism. The invention also relates to a computer program product executing the method.

[0002] Combustion appliance such as gas boilers combust combustion gas to heat water for domestic use and/or central heating system facilities in buildings. The boilers can be used to operate in different modes during their functioning. However, the process steps of each operating mode can vary based on the characteristics of the gas boiler. In particular, control units are used to control the operation of the combustion appliances based on setting parameters associated to the gas type used for the combustion and the corresponding gas valves. It is noted that the process steps of the operating mode can be adjusted or different control procedures can be taken into account, if a different combustion gas valve is used for controlling the fuel gas flow. For example, using a wrong setting parameters related to the gas valve could lead to unsafe system and risk of explosion. With "wrong setting parameters" is intended that a gas valve suitable for a particular gas burner, i.e. for controlling the flow of a determined combustion gas, is used in a heating system wherein the setting parameters are set for the combustion of a different fuel gas. Due to an inconsistency in the setting parameters, the heating system would operate in unsafe conditions.

[0003] Nowadays interchanging gas valves can only be solved by a poka-yoke design of the cable connector of the gas valve. However, gas valves for natural gas and hydrogen are most often using the same connectors. Therefore, the design of the connector for gas valve used for these two types of fuel gases cannot provide a safe tool for avoiding a mix-up of components.

[0004] It is therefore an object to provide a control method and a control system for avoiding risk of using wrong setting parameters regarding the gas valve employed, independent of the type of the cable connector.

[0005] The object is solved by a method for controlling the operation of a combustion appliance, in particular a gas boiler, the combustion appliance being operated based on setting parameters, which are set up based on at least predefined information data on a gas valve, the method comprising:

receiving a valve signal from a gas valve of the combustion appliance, the valve signal comprising actual information data with respect to the gas valve;
comparing the actual information data with the predefined information data with respect to the gas valve; and
modifying the operation of the combustion appliance when the actual information data are different from the predefined information data.

[0006] Based on the fact that the gas valve provides a signal to the control board (including information of the type of valve or the type of fuel gas flowing through the valve), the mix-up of components can be prevented and therefore the risk of unsafe system/explosion is reduced. It is noted that this control method functions also when gas valves of different types have the same cable connector. This is especially useful for example in case a gas valve suitable for controlling the flow of fuel gas mainly containing hydrogen is employed in a heating system, wherein the setting parameters are configured for the combustion of natural gas.

[0007] In one example, modifying the operation of the combustion appliance comprises blocking the combustion appliance. In other words, the gas valve communicates via a signal towards the control board what kind of valve it is. This signal is compared with the setting parameters of the board. In case the gas valve type does not correspond with the setting parameters, the boiler goes in lockout. In addition or in alternative, modifying the operation of the combustion appliance comprises updating the setting parameters. In other words, the gas valve communicates via a signal towards the control board what kind of valve it is. This signal is compared with the setting parameters of the board and the parameters are updated to the correct setting parameters if the gas valve type does not correspond with the settings. In addition or in alternative, modifying the operation of the combustion appliance comprises closing the gas valve. In this way, it is possible to avoid using wrong parameters and consequently attempting an ignition in is unsafe conditions.

[0008] According to another example, the actual information data comprise at least one of:

type of the gas valve; and/or
type of the fuel gas flowing in the combustion appliance; and/or
type of control of the gas valve.

[0009] In this way, it is prevented the interchanging between wrong gas valve types or executions either between natural gas and/or hydrogen, between pneumatic and/or electronic combustion and/or between different power out puts of the gas valve.

[0010] In examples, the valve signal is a signal generated at the gas valve, the signal exclusively including information on the type of the gas valve. In other words, the valve signal can be a dedicated signal generated at the gas valve including information on the type of the gas valve. Also, the valve signal can be a signal generated by the gas valve, the signal comprising additional information other than information on the type of the gas valve. In other words, the valve signal can be an already existing signal which distinguishes the types of gas valve. For

example, the valve signal can be a Pulse Width Modulation, PWM, signal of the gas valve opening. This signal could be present on an electronic controlled gas valve but not on a pneumatic gas valve. Accordingly, the presence of a PWM would indicate the employment of an electronic or pneumatic controlled gas valve.

[0011] In examples, the method comprises selecting different setting parameters based on the actual information data. For example, the setting parameters can be selected if the gas valve is controlled electronically or pneumatically or if the fuel gas is hydrogen or natural gas.

[0012] In a further example, the method comprises continuously monitoring the reception of the valve signal from a gas valve. In this way, a continuous safety check is provided in order to prevent the operation of the combustion appliance with wrong setting parameters.

[0013] In examples, the method further comprises generating a control signal upon receiving the valve signal for modifying the operation of the combustion appliance. For example, the control signal can be sent to the control valve to eventually close the valve. Also, the control signal can be processed by a control unit in order to eventually change the setting parameters. Also, the control signal can be sent to a switch element to eventually putting the combustion appliance in lockout.

[0014] According to an aspect of the present invention, a control system for controlling the operation of a combustion appliance, in particular a gas boiler, is provided. The combustion appliance is operated based on setting parameters, which are set up based on at least predefined information data on a gas valve, wherein the control system comprises at least a gas valve for regulating the fuel gas flowing in the combustion appliance and a control unit connected to the gas valve, the control unit being configured to:

receive a valve signal from the gas valve, the valve signal comprising actual information data with respect to the gas valve;
compare the actual information data with the predefined information data with respect to the gas valve; and
modify the operation of the combustion appliance when the actual information data are different from the predefined information data.

[0015] This is a safety system for preventing mix-up of components in a heating system upon detection of a valve gas signal provided by the gas valve.

[0016] In one example, the gas valve can be a pneumatic controlled gas valve. Alternatively, the gas valve can be an electronic controlled gas valve.

[0017] In examples, the fuel gas flowing in the combustion appliance can comprise more than 20 mol%, preferably at least 30 mol% of hydrogen, in particular the fuel gas comprises at least 95 mol % hydrogen.

[0018] In examples, the system further comprises a signal generator device coupled to the gas valve to generate a gas valve signal, the signal exclusively including information on the type of the gas valve. The valve signal can be therefore a dedicated signal generated at the gas valve informing the control unit regarding the type of gas valve employed (e.g. electronically or pneumatically controlled valve, gas valve for hydrogen or for natural gas, etc.).

[0019] In an aspect of the present invention, a heating system is provided. The heating system comprises at least a burner for combusting a fuel gas and the inventive control system, wherein the control system comprises at least a gas valve for regulating the fuel gas flowing in the heating system and a control unit connected to the gas valve.

[0020] In a further aspect, the use of the inventive control system for controlling the operation of a combustion appliance, in particular of a gas boiler, is provided.

[0021] In one aspect, a computer program product is provided, the computer program product comprising instructions which, when the program is executed by a computer or by the control unit, cause the computer or the control unit to carry out the inventive method.

[0022] Furthermore, a data carrier is provided on which the computer program is stored and/or data carrier signal is provided which transmits the computer program.

[0023] In the figures, the subject-matter of the invention is schematically shown, wherein identical or similarly acting elements are usually provided with the same reference signs.

Figure 1 shows a flow chart of an inventive method according to an example.

Figure 2 shows a schematic representation of the valve signal process according to an example.

Figure 3 shows a schematic representation of the heating system including the control system according to one example.

[0024] Figure 1 shows a flow chart of the method 100 for controlling the operation of a combustion appliance 1 and in particular for operating a gas boiler.

[0025] At step S101, a gas valve signal 13 is received by a gas valve 2 of the combustion appliance 1. The valve signal 13 comprises actual information data with respect to the gas valve 2. At step S102, the actual information data are compared with the predefined information data with respect to the gas valve 2. Based on this comparison, the operation of the combustion appliance 1 is modified when the actual information data are different from the predefined information data (step S103).

[0026] As mentioned above, the operation of the combustion appliance 1 depends on the setting parameters associated to the fuel gas type and also the type of gas valve. Therefore, the control of the operation of the combustion appliance 1 can be carried out by preventing the

operation of the combustion appliance based on said setting parameters if the determined gas valve type is not suitable for the setting parameters (step S104). In this way, it is possible to avoid an attempt of ignition of the burner using setting parameters or boiler's configuration that are not suitable for the gas valve and in particular for fuel gas type.

[0027] Figure 2 schematically illustrates how the valve signal 13 is processed. The gas valve 2 provides the control unit 4 with a valve signal 13. The valve signal 13 can be a dedicated signal specifically generated by a signal generator device 5 coupled to the gas valve 2 or can be a an already existing signal which distinguishes the types of gas valve 2, like for example a PWM signal. The valve signal 13 comprises actual information data with respect to the gas valve 2, such as the type of gas valve and execution in terms of natural gas or hydrogen, in terms of pneumatic or electronic control, or in terms of different power outputs of the valve. Based on the comparison between the actual information data and predefined information data on a gas valve 2 that are used to set the operation parameters the combustion appliance 1, the control unit 4 generates a control signal 14 upon receiving the valve signal 13. The control signal 14 is generated if the actual information data are different from the predefined information data meaning that the setting parameters defined by the predefined information data are not consistent with the actual information data with respect to the gas valve. In other words, the predefined setting parameters are considered wrong for the type of employed gas valve 2.

[0028] The control signal 14 can basically be used for three options. In a first option, the control signal 14 can be processed by the control unit 4 so that the setting parameters are modified and updated. In a second option, the control signal 14 can be sent to a switch element 15 to switching off the combustion appliance 1. In a third option, the control signal 13 can be sent back to the gas valve 2 in order to close the valve 2 and prevent the flowing of the fuel gas. It is noted that the one option does not necessarily exclude the application of another option at the same time or in sequence. For example, based on the operational phase of the combustion appliance, the first option (i.e., updating the setting parameters) can be carried out without turning off the appliance 1 or rather only after putting the appliance in lockout (second option). The first option can also be provided in combination with the closing of the gas valve 2 (third option). In other words, the three options can be taken singularly or combined with each other according to a predefined sequence or at the same time.

[0029] Figure 3 illustrates a heating system 6 comprising a combustion appliance 1 such as gas boiler used for the combustion of fuel gas, for example containing hydrocarbons and/or hydrogen. The fuel gas is mixed with air and is provided to the burner 8 through a gas mixture channel 9, the burner 8 being coupled to a heat exchanger 7 for heating water for domestic use and/or central heating system facilities in buildings. The gas mixture channel 9 receives air from an air supply line 12 and fuel gas from a gas supply line 10. The flow of air - and correspondingly the flow of the air/fuel gas mixture - can be regulated by a fan element 11 located in the air supply line 12. Advantageously, the fan element 11 is located upstream the region where the fuel gas is inserted into the gas mixture channel 9. The heating system 6 comprises furthermore a control system 3 including a control unit 4 and a gas valve 2. The gas valve 2 is located in the gas supply line 10 and serves to regulate the flow gas. The control system 3 is configured to carry out the control method 100 as defined above. Accordingly, the valve signal 13 is sent by the gas valve 2 to the control unit 4. The actual information data provided with the valve signal 13 are compared with the predefined information data and based on the comparison result, the control unit 4 can perform the steps as described with figure 2.

[0030] The employment of a valve signal 13 including actual information data with respect to the gas valve 2 can strongly increase the safety of the heating system 6 in order to avoid wrong setting parameters, for example, using a gas valve 2 for a fuel gas that is different from the fuel gas type for which the operation parameters of the combustion appliance 1 are set and for which an ignition (or an attempt of ignition) of the burner 8 would cause a risky situation, e.g., an explosion or a strong damage of the components of the combustion appliance 1.

Reference Signs

[0031]

1	Combustion appliance
2	Gas valve
3	Control system
4	Control unit
5	Signal generator device
6	Heating system
7	Heat exchanger
8	Burner
9	Air/gas mixture channel
10	Gas supply line
11	Fan element
12	Air supply line
13	Valve signal
14	Control signal
15	Switch element
100	Method

Claims

1. Method (100) for controlling the operation of a combustion appliance (1), in particular a gas boiler, the combustion appliance (1) being operated based on setting parameters, which are set up based on at

least predefined information data on a gas valve (2), the method (100) comprising:

receiving (S101) a valve signal (13) from a gas valve (2) of the combustion appliance (1), the valve signal (13) comprising actual information data with respect to the gas valve (2);
comparing (S102) the actual information data with the predefined information data with respect to the gas valve (2); and
modifying (S103) the operation of the combustion appliance (1) when the actual information data are different from the predefined information data.

2. Method (100) according to claim 1, **characterized in that** modifying (S103) the operation of the combustion appliance (1) comprises:

a. blocking the combustion appliance (1); and/or
b. updating the setting parameters; and/or
c. closing the gas valve (2).

3. Method (100) according to any one of claims 1 to 2, **characterized in that** the actual information data comprise at least one of:

a. type of the gas valve (2); and/or
b. type of the fuel gas flowing in the combustion appliance (1); and/or
c. type of control of the gas valve (2).

4. Method (100) according to any one of claim 1 to 3, **characterized in that**

a. the valve signal (13) is a signal generated at the gas valve (2), the signal exclusively including information on the type of the gas valve (2); and/or
b. the valve signal (13) is a signal generated by the gas valve (2), the signal comprising additional information other than information on the type of the gas valve (2); and/or
c. the valve signal (13) is a Pulse Width Modulation, PWM, signal of the gas valve (2) opening.

5. Method (100) according to any one of claims 1 to 4, **characterized in that** the method (100) comprises selecting different setting parameters based on the actual information data.

6. Method (100) according to any one of claims 1 to 5, **characterized in that** the method (100) further comprises continuously monitoring the reception of the valve signal (13) from a gas valve (2).

7. Method (100) according to any one of claims 1 to 6, **characterized in that** the method (100) further comprises generating a control signal (14) upon receiving the valve signal (13) for modifying (S103) the operation of the combustion appliance (1).

8. Method (100) according to claim 7, **characterized in that**

a. the control signal (14) is sent to the control valve (2); and/or
b. the control signal (14) is processed by a control unit (4), and/or
c. the control signal (14) is sent to a switch element (15).

9. Control system (3) for controlling the operation of a combustion appliance (1), in particular a gas boiler, the combustion appliance (1) being operated based on setting parameters, which are set up based on at least predefined information data on a gas valve (2), wherein the control system (3) comprises at least a gas valve (2) for regulating the fuel gas flowing in the combustion appliance (1) and a control unit (4) connected to the gas valve (2), the control unit (4) being configured to:

receive a valve signal (13) from the gas valve (2), the valve signal (13) comprising actual information data with respect to the gas valve (2);
compare the actual information data with the predefined information data with respect to the gas valve; and
modify the operation of the combustion appliance (1) when the actual information data are different from the predefined information data.

10. Control system (3) according to claim 9, **characterized in that**

a. the gas valve (2) is a pneumatic controlled gas valve; or
b. the gas valve (2) is an electronic controlled gas valve.

11. Control system (3) according to any one of claims 9 to 10, **characterized in that** the fuel gas flowing in the combustion appliance (1) comprises more than 20 mol%, preferably at least 30 mol% of hydrogen, in particular the fuel gas comprises at least 95 mol % hydrogen.

12. Control system (3) according to any one of claims 9 to 11, **characterized in that** the system (3) further comprises a signal generator device (5) coupled to the gas valve (2) to generate a gas valve signal (13), the signal exclusively including information on the type of the gas valve (2).

13. Heating system (6) comprising at least a burner (8)

for combusting a fuel gas and the control system (3) according to any one of claims 9 to 12, wherein the control system (3) comprises at least a gas valve (2) for regulating the fuel gas flowing in the heating system (6) and a control unit (4) connected to the gas valve (2).

14. Use of the control system (3) according to any one of claims 9 to 12 for controlling the operation of a combustion appliance (1), in particular a gas boiler.

15. Computer program product comprising instructions which, when the program is executed by a computer or control unit, cause the computer or the control unit to carry out the method according to one of the claims 1 to 8.

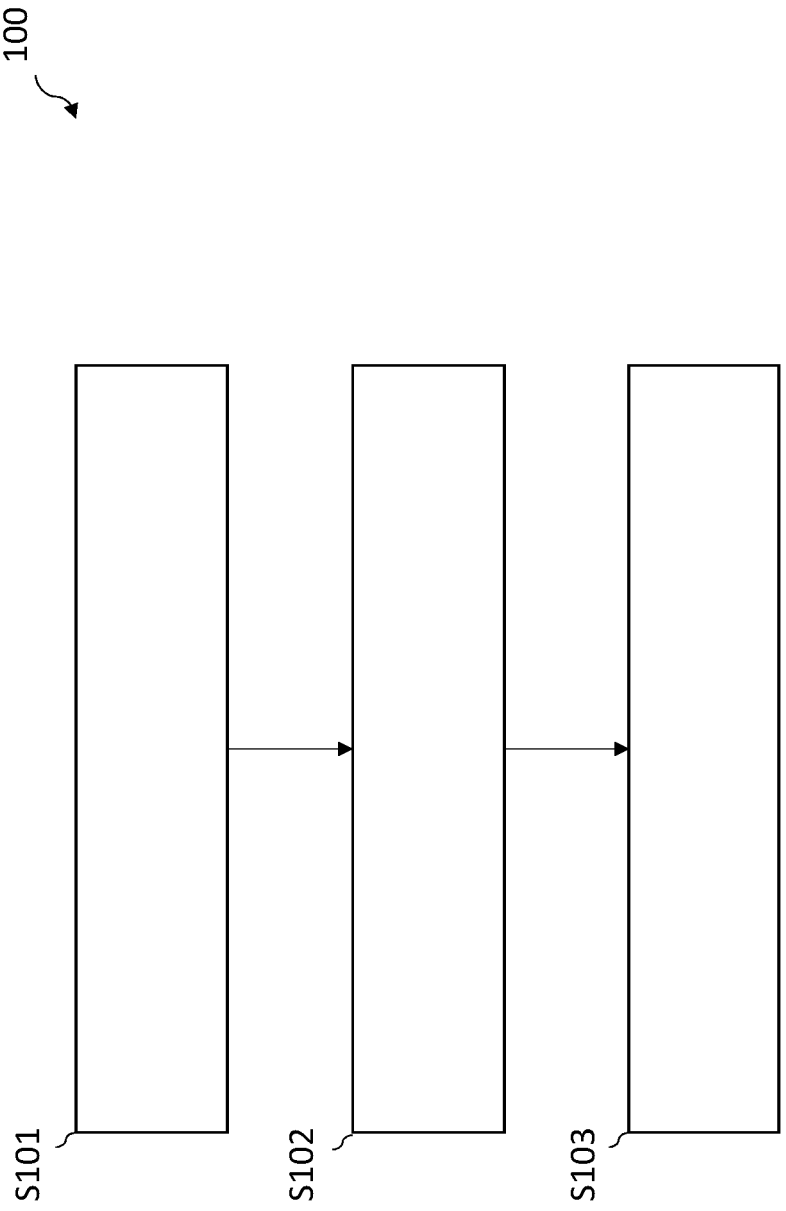

FIG. 1

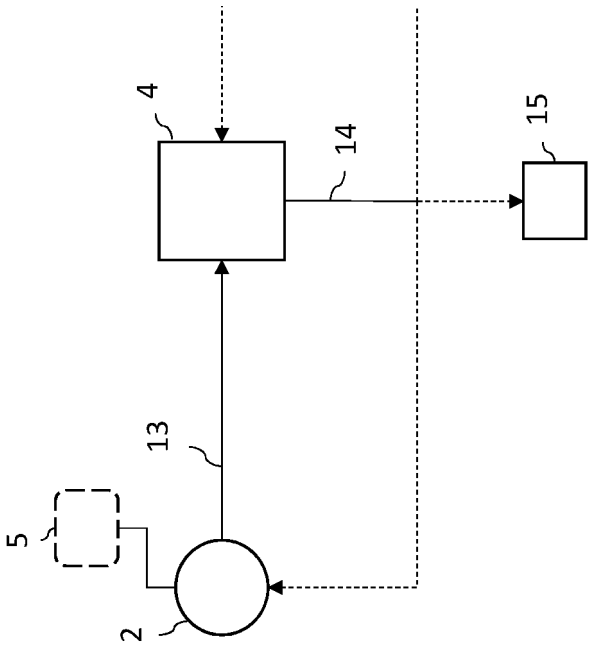

FIG. 2

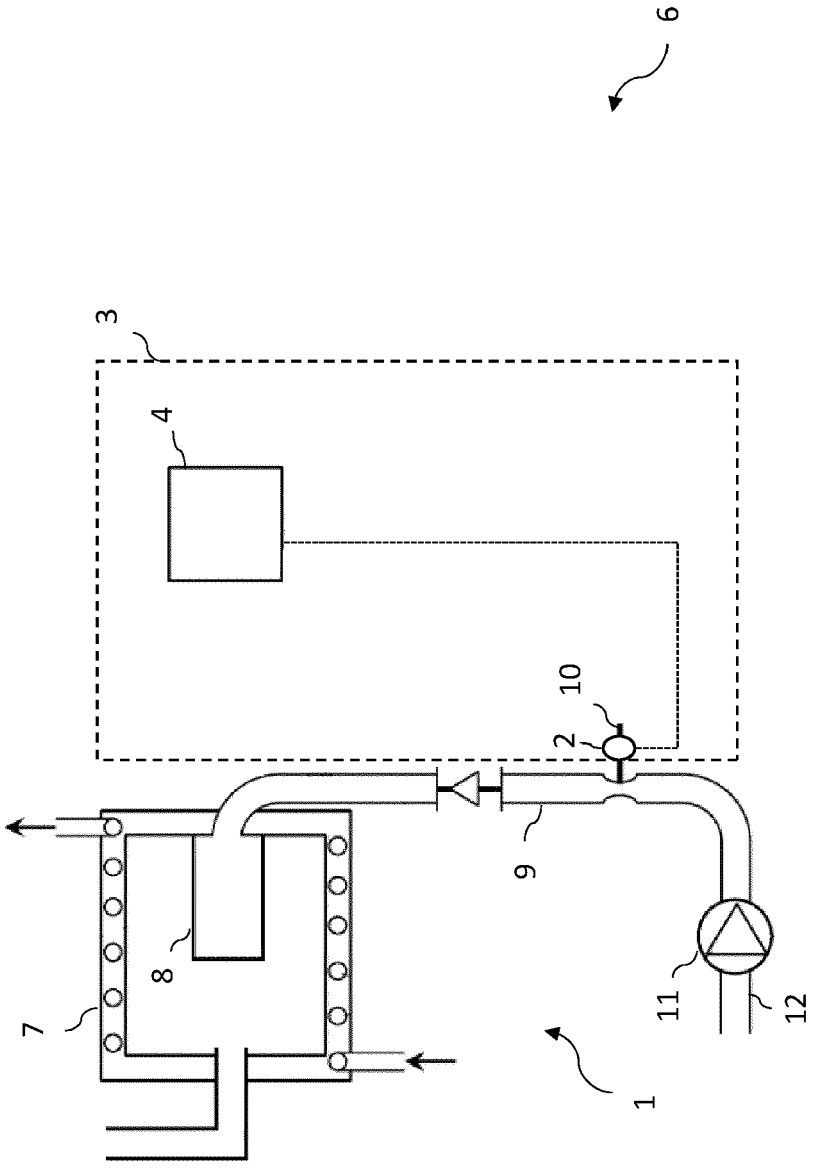

FIG. 3

Europäisches Patentamt
European Patent Office
Office européen des brevets

EUROPEAN SEARCH REPORT

Application Number
EP 22 17 2232

DOCUMENTS CONSIDERED TO BE RELEVANT

Category	Citation of document with indication, where appropriate, of relevant passages	Relevant to claim	CLASSIFICATION OF THE APPLICATION (IPC)
X	DE 10 2018 124915 A1 (EBM PAPST LANDSHUT GMBH [DE]) 9 April 2020 (2020-04-09) * the whole document * -----	1-15	INV. F23N5/24 F23D14/02 F23N1/02
X	EP 3 674 624 A1 (LG ELECTRONICS INC [KR]) 1 July 2020 (2020-07-01) * claims 1-15; figures 1-5 * -----	1-15	F16K37/00
X	WO 99/24758 A1 (MAXON CORP [US]) 20 May 1999 (1999-05-20) * page 4, line 1 - page 5, line 20 * * page 12, line 19 - page 14, line 21 * * figures 1, 9 * -----	1-15	

TECHNICAL FIELDS SEARCHED (IPC)

F23N
F16K

The present search report has been drawn up for all claims

Place of search	Date of completion of the search	Examiner
Munich	29 November 2022	Vogl, Paul

CATEGORY OF CITED DOCUMENTS

X : particularly relevant if taken alone
Y : particularly relevant if combined with another document of the same category
A : technological background
O : non-written disclosure
P : intermediate document

T : theory or principle underlying the invention
E : earlier patent document, but published on, or after the filing date
D : document cited in the application
L : document cited for other reasons
.....
& : member of the same patent family, corresponding document

EPO FORM 1503 03.82 (P04C01)

ANNEX TO THE EUROPEAN SEARCH REPORT ON EUROPEAN PATENT APPLICATION NO. EP 22 17 2232

This annex lists the patent family members relating to the patent documents cited in the above-mentioned European search report. The members are as contained in the European Patent Office EDP file on
The European Patent Office is in no way liable for these particulars which are merely given for the purpose of information.

29-11-2022

Patent document cited in search report	Publication date	Patent family member(s)	Publication date
DE 102018124915 A1	09-04-2020	CN 209511228 U	18-10-2019
		DE 102018124915 A1	09-04-2020
		EP 3794282 A1	24-03-2021
		WO 2020074192 A1	16-04-2020
EP 3674624 A1	01-07-2020	EP 3674624 A1	01-07-2020
		KR 20200079688 A	06-07-2020
		US 2020208839 A1	02-07-2020
WO 9924758 A1	20-05-1999	CA 2308496 A1	20-05-1999
		EP 1036288 A1	20-09-2000
		US 5997280 A	07-12-1999
		US 6247919 B1	19-06-2001
		WO 9924758 A1	20-05-1999

EPO FORM P0459

For more details about this annex : see Official Journal of the European Patent Office, No. 12/82