June 14, 1966 CHAN HUNG KAY 3,255,951

SYNTHETIC PLASTIC BAGS

Filed Oct. 29, 1964

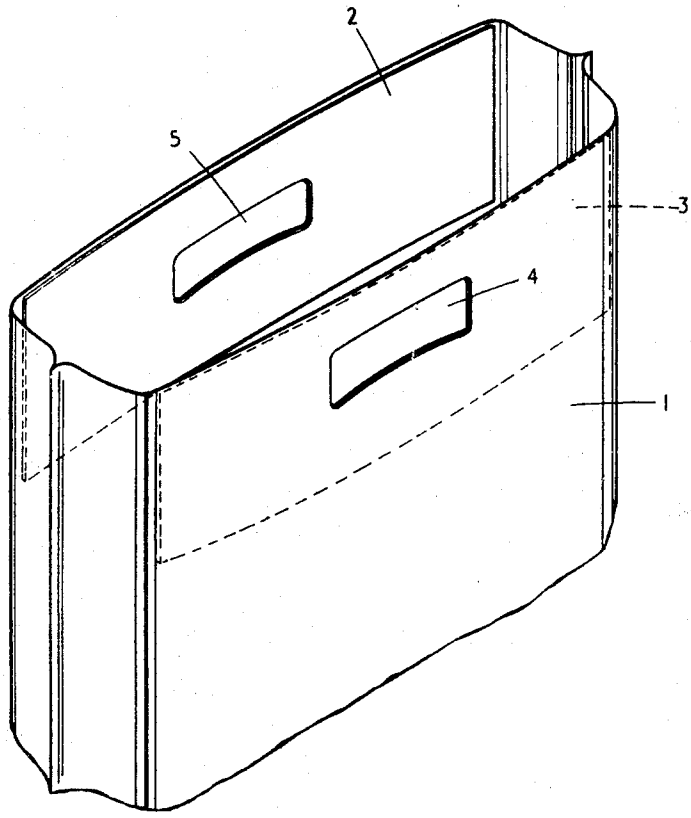

United States Patent Office

3,255,951

Patented June 14, 1966

1

3,255,951

# SYNTHETIC PLASTIC BAGS

Chan Hung Kay, Hong Kong, assignor to
Polson Industries Company

Filed Oct. 29, 1964, Ser. No. 407,478
Claims priority, application Great Britain, Nov. 1, 1963, 43,175/63
1 Claim. (Cl. 229—54)

This invention relates to synthetic plastic bags.

It has previously been proposed to make synthetic plastic bags by forming a tube of synthetic plastic material. The tube is then flattened and heat sealed along one open end to form the bottom of the bag, the other end being left open to form the mouth of the bag. It has also been proposed to form carrying handles in such a bag by providing co-operating shaped apertures in each side of the bag, these apertures being reinforced around their edges against tearing by a thin peripheral strip of substantially rigid synthetic plastic material heat sealed or otherwise secured to the material of the bag. This form of reinforcement results in a bag having a mouth whose edges formed by the sides of the bag are soft and flexible and are therefore liable to distort or even tear during use of the bag.

An object of the present invention is to provide an improved form of synthetic plastic carrier bag.

According to the present invention there is provided a synthetic plastic bag having a reinforcing strip adhesively secured along each mouth forming edge of the bag, and in each of which strips a carrying aperture is formed.

Preferably the reinforcing strip is of cardboard, stiff paper or the like.

An embodiment of the invention is illustrated in the accompanying drawing which is a perspective view of a part of a bag.

2

A synthetic plastic carrier bag comprises a tube 1 of thin polyethylene. The tube is flattened and one end is heat sealed to form the bottom of the bag (not shown in the drawing). The remaining open mouth-forming end of the tube is provided with reinforcing strips 2 and 3 of cardboard which are adhesively secured by a chemical adhesive along the inside surface of each of the two edges which form the mouth of the bag. The depth of each strip of cardboard is sufficient to allow shaped carrying apertures 4 and 5 to be cut in the strips and the sides of the bag to which they are secured.

With carrier bags of polyethylene as described above, a stronger bag than previously proposed plastic bags is obtained. Also polyethlylene of a gauge less than what has previoulsy been proposed for such bags can be employed.

What I claim is:

A bag comprising a tube generally rectangular in cross section of polyethylene or the like, said tube being sealed at one end to form the bottom of the bag, a reinforcing strip of cardboard adhesively secured to each inner surface of the longer sides of said tube at the opposite end with the outer edges of said strips substantially coinciding with the edges of said tube at said opposite end, and said tube and strips having aligned carrying apertures extending therethrough.

**References Cited by the Examiner**

UNITED STATES PATENTS

| | | | |
|---|---|---|---|
| 1,418,001 | 5/1922 | Kniep | 229—54 |
| 2,516,266 | 7/1950 | Simpson | 229—54 |
| 3,132,472 | 5/1964 | Shapiro et al. | 229—54 |

JOSEPH R. LECLAIR, *Primary Examiner.*
D. M. BOCKENEK, *Assistant Examiner.*