Sept. 28, 1937. O. H. PADDOCK 2,094,161

CLEANING DEVICE

Filed Nov. 9, 1933 3 Sheets-Sheet 1

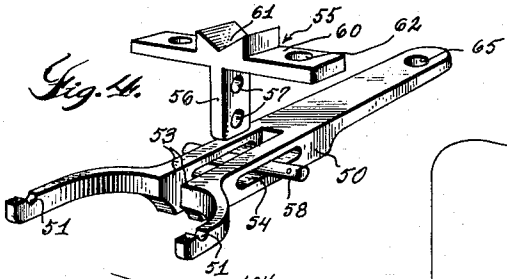

Fig. 4.

Fig. 1.

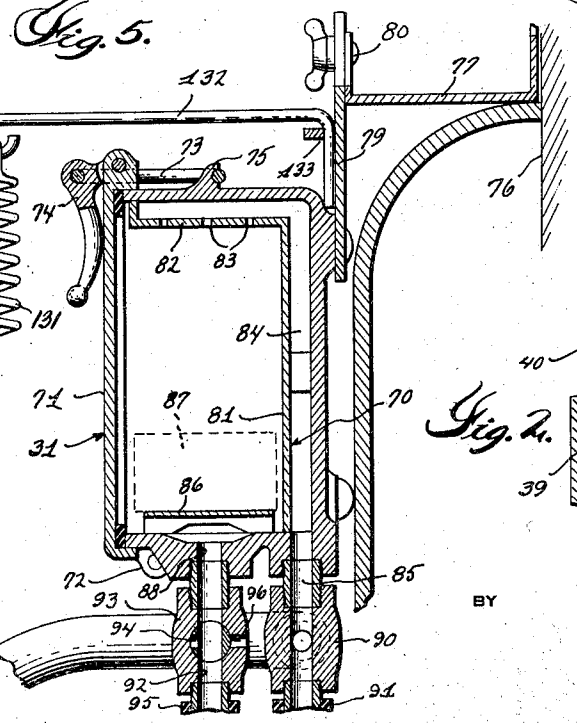

Fig. 5.

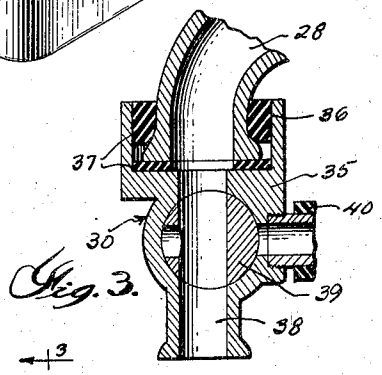

Fig. 3.

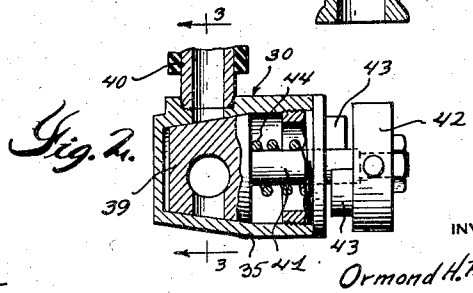

Fig. 2.

INVENTOR

Ormond H. Paddock

BY

Charles B. Belknap

ATTORNEY

Sept. 28, 1937. O. H. PADDOCK 2,094,161

CLEANING DEVICE

Filed Nov. 9, 1933 3 Sheets-Sheet 2

Fig. 7.

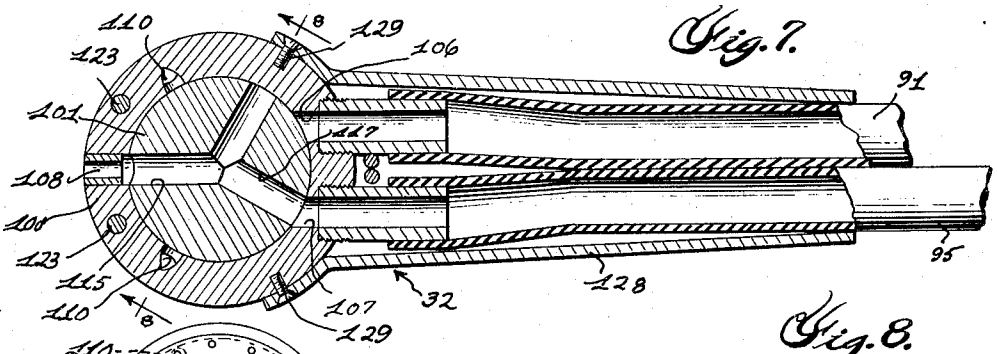

Fig. 8.

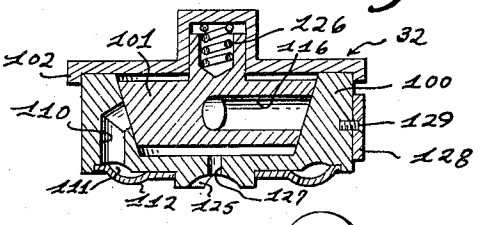

Fig. 9.

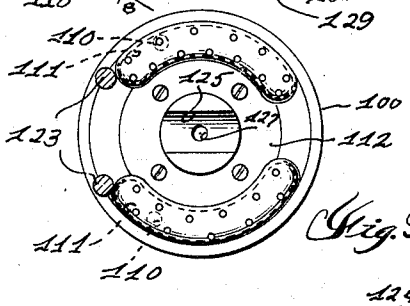

Fig. 6.

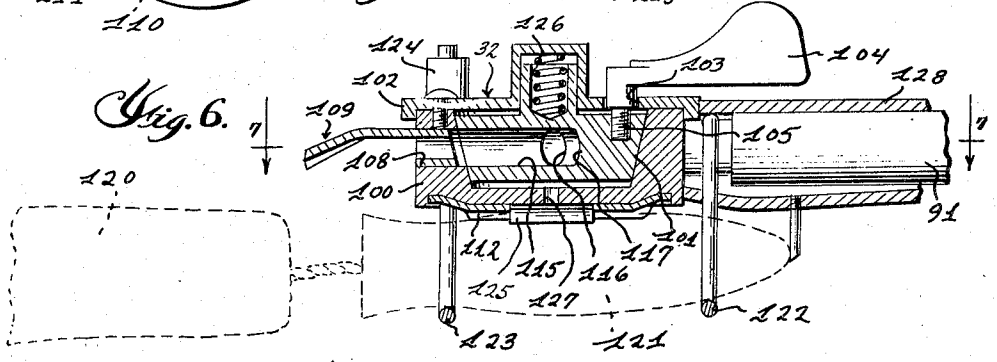

Fig. 10.

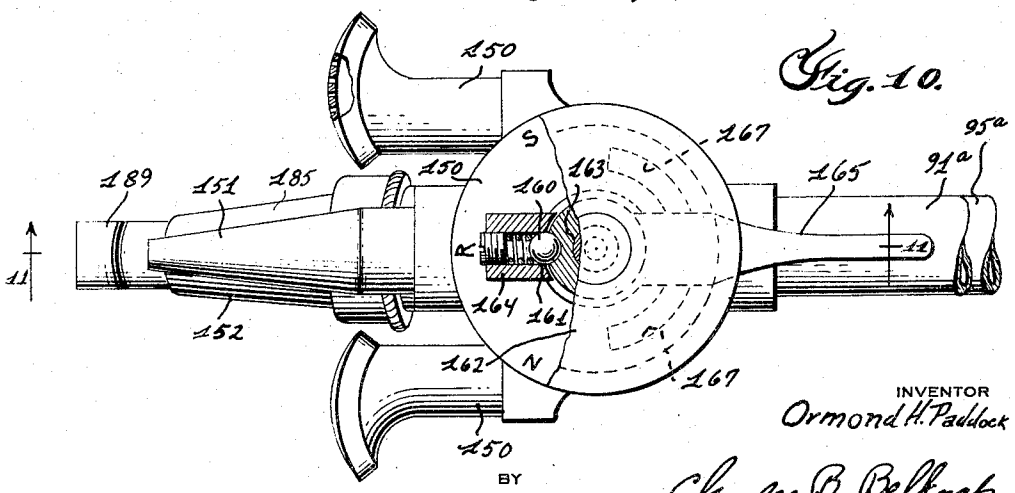

INVENTOR
Ormond H. Paddock

BY
Charles B. Belknap

ATTORNEY

Sept. 28, 1937. O. H. PADDOCK 2,094,161

CLEANING DEVICE

Filed Nov. 9, 1933 3 Sheets-Sheet 3

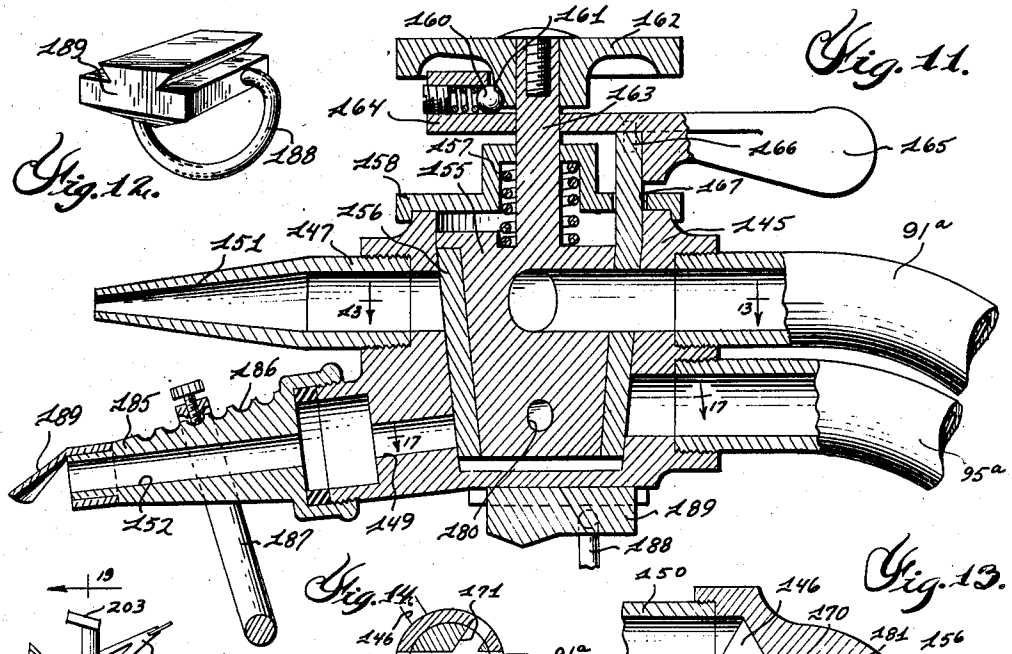

Fig. 11.

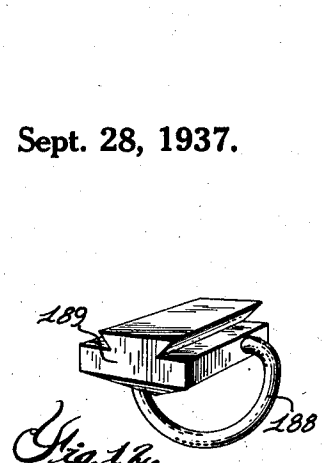

Fig. 12.

Fig. 14.

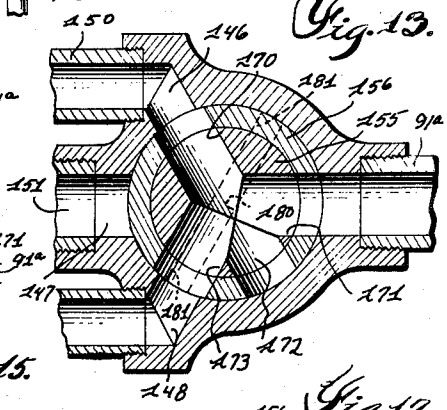

Fig. 13.

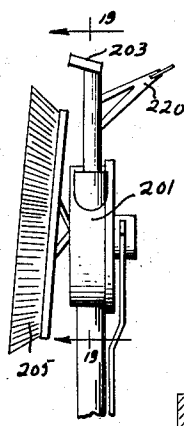

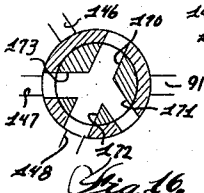

Fig. 16.

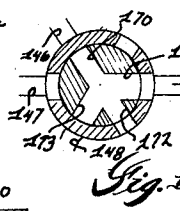

Fig. 15.

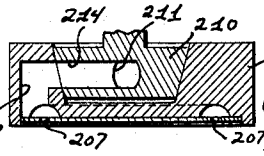

Fig. 20.

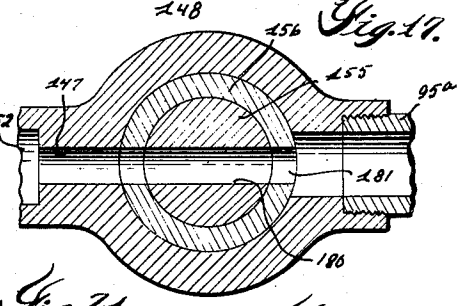

Fig. 17.

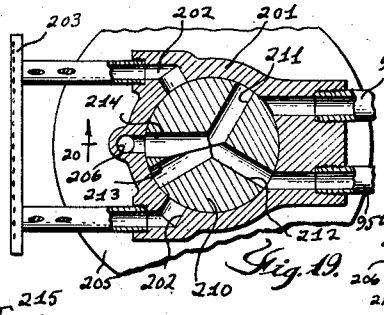

Fig. 19.

Fig. 21.

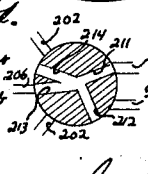

Fig. 22.

Fig. 18.

INVENTOR
Ormond H. Paddock

BY
Charles B. Belknap

ATTORNEY

Patented Sept. 28, 1937 2,094,161

UNITED STATES PATENT OFFICE

2,094,161

CLEANING DEVICE

Ormond H. Paddock, Rossford, Ohio

Application November 9, 1933, Serial No. 697,235

1 Claim. (Cl. 15—128)

This invention relates to a cleaning device and has particular reference to a device by which objects may be washed with a washing liquid, such as soapy water or the like, and may then be rinsed with a clear liquid, such, for example, as rinsing water.

One of the primary objects of this invention is to provide a device of the above mentioned character, in which washing and rinsing liquids will be always available and in which a switch may be instantaneously made to the discharge of either one liquid or the other.

More particularly the invention contemplates the provision of a device of the above mentioned character having a plurality of discharge outlets and having separate inlets for the washing and rinsing liquids together with means whereby the washing liquid may be connected to one or more of the outlets and at the election of the operator this discharge cut off and the rinsing liquid immediately connected to the one or more of the remaining outlets.

The invention contemplates a washing or cleaning device having a handle portion by which the same may be manipulated and having means adjacent this handle by which the switch from soapy to rinsing water or the reverse may be effected.

The invention contemplates a washing device which will be light of weight and which may therefore be readily manipulated by one hand of the operator, it being contemplated that the means for supplying the washing mixture, such as soap, to the liquid, be remote from the cleaning device and it being further contemplated that the control of the discharge of washing or rinsing liquids may be effected by one hand of the operator so that the other hand may, if desired, be used for holding the object to be washed with the result that the washing operation may be accomplished without the necessity of the operator's hands contacting to any great extent with the washing or rinsing liquids.

A further object of the invention is to provide a cleaning device having a washing element such as a brush or the like and having a spray or like discharge for the rinsing liquid, the arrangement being such that the washing liquid will not drip onto the object being washed during the rinsing of the object.

The invention provides means whereby the device may be readily installed without the necessity of providing threaded fittings and the like and provides further means for relieving excessive pressure of the liquid used to thus prevent the danger of the fittings being forced loose.

The invention provides further means for mixing soap or the like with the liquid to form the washing liquid, this means being so constructed that the soap or the like will be contacted by sprays of the liquid while during periods of nonuse the soap will not be compelled to remain immersed in the liquid. Still further this last mentioned means provides an air cushion to further compensate for rises in pressure of the liquid.

Numerous other objects and advantages of this invention will become more apparent as the following description proceeds particularly when reference is had to the accompanying drawings wherein

Figure 1 is a perspective view of a device constructed in accordance with the teachings of this invention, showing this device associated with a sink of usual construction;

Figure 2 is a sectional view taken substantially on the line 2—2 of Figure 1;

Figure 3 is a sectional view taken substantially on the line 3—3 of Figure 2;

Figure 4 is a detail perspective view of a portion of the structure shown in Figure 1, the parts of this portion of the structure being disclosed in spaced relation to each other to more clearly illustrate their structure;

Figure 5 is a vertical sectional view through a portion of the structure shown in Figure 1;

Figure 6 is a sectional view taken substantially on the line 6—6 of Figure 1;

Figure 7 is a horizontal sectional view taken substantially on the line 7—7 of Figure 6;

Figure 8 is a sectional view taken substantially on the line 8—8 of Figure 7;

Figure 9 is a bottom plan view of the structure shown in Figure 8;

Figure 10 is a plan view with parts broken away of a slightly modified form of construction;

Figure 11 is a sectional view taken substantially on the line 11—11 of Figure 10;

Figure 12 is a detail perspective view of a portion of the structure shown in Figure 11;

Figure 13 is a fragmentary longitudinal sectional view taken on the line 13—13 of Figure 11;

Figures 14, 15, 16, and 17 are diagrammatic sectional views showing various positions of the valve shown in Figures 11 and 13;

Figure 18 is a side elevational view of a further modified form of construction;

Figure 19 is a longitudinal sectional view taken substantially on the line 19—19 of Figure 18;

Figure 20 is a vertical sectional view taken on the line 20—20 of Figure 19; and

Figures 21 and 22 are diagrammatic sectional views showing various positions of the valve shown in Figures 19 and 20.

Referring then particularly to the drawings wherein like reference characters designate corresponding parts throughout all views, the numeral 25 designates generally a sink which may be of any standard construction and which is shown as being provided with the hot and cold water outlets 26 and 27 respectively which discharge through a common swivelly mounted pipe 28. It is to be understood that this particular arrangement is disclosed for the purposes of illustration only and that the conduit or pipe 28 represents any suitable source of supply of a liquid for use with the cleaning device about to be described.

The cleaning device or system comprises a fitting 30 adapted to be connected to the liquid supply pipe, a soap or like mixing device 31 and a handle nozzle assembly designated generally by the reference character 32.

The connection or fitting 30 is so designed that it may be readily secured to any liquid supply pipe without in any way interfering with the normal operation of this pipe. The connection comprises a casting or the like 35 having a cup-shaped portion 36 adapted to surround the discharge end of the conduit 28. The cup-shaped portion of the casting is provided with suitable washers 37 to aid in maintaining a fluid-tight connection between the conduit 28 and the casting when the latter is clamped in operative position.

The casting is provided with a passage 38 which registers with the discharge end of the pipe 28 and is further provided with a rotatably mounted three-way valve 39 which is movable to two positions, in one of which it permits the liquid to flow directly through the casting and be discharged from the lower end thereof, and in the other of which it connects the conduit 28 to a conduit 40. It will thus be seen that with the valve in the first of the above mentioned positions liquid may be discharged into the sink from the conduit 28 in substantially the same manner as though the casting were not secured to the end of the conduit, thus making it possible to permanently secure the connection in position, without preventing the substantially normal use of the sink.

For operating the valve 39, this valve is provided with a stem 41 to which a knob 42 is secured. Stops 43 limit the rotation of the knob 42 to assist in accurately positioning the valve in one or the other of the two optional positions. The spring 44 engages the valve 39 to hold the same snugly in engagement with the bore in the casting in which it is mounted.

For securing the casting 35 in position with reference to the discharge end of the pipe 28, the structure disclosed in Figure 4 is provided. This structure comprises a lever or arm 50 having a bifurcated end the furcations of which are notched as at 51 to engage pins 52 on the sides of the casting 35. Adjacent its bifurcated end the arm 50 is longitudinally slotted as at 53 and transversely slotted as at 54, the transverse and longitudinal slots registering as clearly illustrated.

Cooperating with the arm 50 is a T-shaped member 55, the stem 56 of which is adapted to be received in the slot 53. This stem is provided with vertically spaced transverse bores 57 any one of which may be registered with the slots 54 and through which a pin or bolt 58 may be passed to secure the T-shaped member to the arm. It will be apparent that by providing a plurality of bores 57, the T-shaped member may be vertically adjusted with reference to the arm 50 and that by elongating the slots 54, the T-shaped member is adapted for longitudinal adjustment with reference to the arm 50.

The head 60 of the T-shaped member is provided with a V-notch 61 adapted to receive the under side of the pipe 28. The head 60 is further provided with bores 62 through which the legs of U-bolt 63 extend, this U-bolt embracing the conduit 28 and being secured in position by suitable nuts or the like 64.

Opposite its bifurcated end the arm 50 is provided with a threaded bore 65 adapted to receive a screw or bolt 66 having a head which engages the underside of the pipe 28. The arrangement is such that by properly adjusting the bolt 66 the arm 50 may be rocked about the fulcrum afforded by the pin 58 to thus rigidly clamp the casting against the discharge end of the pipe 28. The fact that the fulcrum is adjustable both vertically and horizontally, assures that the casting may be secured to pipes or conduits of various shapes, proportions and designs.

The conduit 40 delivers the liquid from the pipe 28 to a point adjacent the soap container as will hereinafter be more fully described. The soap container comprises a housing 70 of a size sufficient to receive an ordinary cake of laundry or like soap. The housing is closed by a front door 71 which is hingedly mounted as at 72 and which is clamped in closed position by a suitable clamping loop 73 pivotally secured to a handle 74 and engageable with a lug 75 secured to the top of the housing.

The housing may be secured in any desired position and is shown as being secured to the wall 76 by a plate 77 which is adjustably secured to the wall as at 78. A plate 79 secured to the housing is adjustably secured to the plate 77 as at 80 with the result that the vertical adjustment of the soap container may be readily effected.

Disposed within the soap container and adjacent the rear thereof, is a baffle 81 which extends vertically upwardly from the lower end of the housing or soap container to adjacent the upper end thereof. As its upper end the baffle is bent forwardly to form the horizontal portion 82 which is perforated as at 83. The baffle provides a passage 84 extending up the rear and across the top of the housing, this passage communicating with an inlet nipple 85.

Disposed in the lower end of the housing 70 is a plate 86 which holds the cake of soap 87 in spaced relation to the outlet 88 which is formed in the bottom of the housing. It will be apparent that liquid supplied to the passage 84 will be discharged through the apertures 83 and thus sprayed on to the cake of soap and that the suds thus formed may pass outwardly through the outlet 88.

The conduit 40 connects with a T-fitting 90 and one branch of this T-fitting communicates with the passage 84 of the soap container. The other branch of the T-fitting communicates with a conduit 91 which extends to the nozzle handle assembly as will hereinafter be described.

The discharge passage 88 from the soap container connects with a passage 92 in a fitting 93

which is suitably secured to the lower end of the soap container. Disposed in the passage 93 is a valve 94 which is operable to place the passage 88 in communication with a conduit 95 or in communication with a vent port 96 formed in the fitting. The valve 94 may be actuated by a suitable handle 96 projecting from one side of the fitting 93.

The conduits 91 and 95 extend to the handle nozzle assembly 32 as clearly illustrated in Figures 1 and 7 of the drawings. The nozzle handle assembly comprises a valve body 100 in which a plug valve 101 is rotatably journaled.

Secured to the top of the valve body is a cover 102, which is provided with an arcuate slot 103 through which the shank of an actuating handle 104 extends, this shank being secured to the plug valve as at 105. The arcuate slot limits rotative movement of the plug valve to a definite arc which is preferably sixty degrees.

The valve body is provided with bores 106 and 107 which communicate with the conduits 91 and 95 respectively and is also provided with a bore 108 which is arranged to direct liquid discharged therefrom against a spreading baffle 109 which is suitably secured to the valve body as clearly illustrated in Figure 6 of the drawings. The valve body is also provided with bores 110, each bore communicating with a chamber 111 formed on the under face of the valve body. These chambers are disposed on opposite sides of the valve body as clearly illustrated in Figure 9 of the drawings, each chamber being formed by a groove formed in the bottom of the valve body and an apertured plate 112 secured to the valve body.

The plug valve is bored to form a Y-shaped bore having the branches 115, 116, and 117. The arrangement is such that when the plug valve is in one position of rotative adjustment as illustrated in Figure 7 of the drawings, the conduit 95 is connected to the discharge bore 108 in the valve body. When, however, the plug valve is rotated to its other extreme position by actuation of the finger piece 104, the connection between bore 108 and conduit 95 is cut off and conduit 91 is connected to the bores 110 by branch 116 and the branches 115 and 117.

It is contemplated that the discharge from the bore 108 will be deflected onto a suitable cleaning or scouring device such, for example, as the brush 120. It constitutes a feature of this invention that the brush may be of any desired character, provision being made that the handle 121 thereof may be adjustably clamped to the underside of the valve housing regardless of variations in the shape of this handle. This is accomplished by providing a pair of U-shaped members, one, designated by the reference character 122, being secured to the nozzle assembly and embracing the free end of the handle 121 and the other 123, embracing the handle 121 adjacent its other end and extending up through the valve housing and being clamped in place by suitable nuts or the like 124. The body of the handle intermediate parts thereof engaged by the U-shaped straps, engages an arcuate recess 125 formed in the bottom of the valve housing.

It is to be noted that the valve plug 101 is excessively tapered and is held in place in the valve body by a suitable spring 126. The taper is such and the spring is so calibrated that upon the building up of too great a pressure in the conduits leading to the valve housing, and therefore in the valve housing, the valve plug 101 will raise against the force exerted on the same by the spring permitting the liquid under pressure to escape either through the slot in the cover 102 or through the opening 127 formed in the bottom of the valve housing. This arrangement insures that connections between the conduits 91 and 95 and their fittings and between the conduit 40 and its fittings will not be broken upon the sudden rise in the pressure of the liquid supplied to the system.

For convenience in handling the discharge nozzle, a shield 128 may be secured to the valve housing as at 129, this shield enclosing the adjacent ends of the conduits 91 and 95 and their connections to the valve housing. Further to facilitate an easy manipulation of the nozzle, the conduits 91 and 95 are preferably resiliently suspended from a part of the soap mixer support, this suspension including a bracket 130 which embraces the two conduits, a spring 131 connected to said bracket and connected to an arm 132 pivotally connected as at 133 to the plate 79. This support relieves the operator of a portion of the weight of the two conduits.

The structure as thus far described operates as follows: When it is desired to utilize the water or the like discharged from the pipe 28 for cooking and general kitchen use, the valve plug 39 may be turned to permit a direct discharge of the liquid through the casting or fitting 35. When, however, it is desired to use the washing device, the valve 39 is rotated to place the pipe 28 in communication with the conduit 40. If at this time the valve plug 101 is in the position shown in Figure 7 of the drawings, the water being unable to escape by way of conduit 91 will flow upwardly from the fitting 90 into the soap container and will be sprayed down over the soap thus supplying soapy water to the conduit 95 and thus to discharge 108. This water will be deflected onto the brush 120 so that this soapy brush may be utilized for washing the objects such as dishes and the like.

After a dish has been cleansed with the soapy water and the brush, it may be immediately rinsed by rotating the valve plug 101 to place the chambers 111 in communication with the clear water conduit 91 which it will be understood will be filled with clear water throughout its length. The arrangement is such that this clear water will be discharged or sprayed from these chambers on opposite sides of the brush handle 121 and thus may be directed onto the article to be rinsed. It is to be noted that the rinse discharge is so arranged with respect to the washing fluid discharge and the brush or cleaning element that the rinsing fluid is directed against the article to be rinsed without contacting and flushing the brush or cleaning element.

Obviously, the soapy water conduit 95 will remain filled with soapy water so that when the next dish or the like is to be washed, the switch may immediately be made to effect a discharge of soapy water onto the brush 120, this action simultaneously cutting off the supply of clear water to the chambers 111. After the entire washing operation has been completed, the supply of water to the pipe 28 may be cut off and the valve 94 then actuated to vent the soap container to thus permit the draining of the soap container and the two conduits so that the device will be substantially free of water until the next washing operation is started.

In the above brief description of the operation of the device, a preferred method has been se-

lected for the purposes of illustration. It will be apparent, however, that other methods of washing might be followed as, for example, a number of articles might first be washed, then racked and the entire rinsing operation accomplished with a single valve actuation.

It will be understood that the whole nozzle assembly may be held in one hand and the dish to be washed in the other. The valve handle **104** is so associated with the grip portion of the device that it may be actuated by the thumb of the hand which holds the device. By providing a constant supply of both soapy and clear water to the nozzle, the switch from soapy to clear water or the reverse thereof may be made instantaneously without the necessity of washing off the brush with clear water and without the necessity of clearing out a long conduit already filled with the liquid previously used. This is of particular importance since it not only expedites the washing operation and prevents the wasting of the soapy and clear water but also practically eliminates the drip of either cleaning or rinsing fluids affter the supply has been cut off, this being due to the proximity of the actuating valve to the discharge orifices.

As brought out before, in this particular embodiment of the invention, the valve construction at the nozzle is so arranged that the valve will lift under excessive pressure permitting the escape of the liquid. This will only occur when excessive pressure is built up either due to an increase in the pressure of the source of liquid or due to the fact that the valve plug **101** is left in a neutral position where all of the bores through this plug are closed. During the rotation of the valve plug **101** from one of its positions to the other, the momentary building up of pressure is compensated for by the compression of the air cushion formed in the top of the soap container by the trapping of air therein. It might be noted that during the use of the construction, the upper part of the soap container will be filled with air and that this not only constitutes a cushion for absorbing the excess pressure as above mentioned but also insures that water being sprayed through the openings **83** will impinge directly on the cake of soap and will not have their velocity decreased by first striking a body of water.

The means providing for the connection of the conduit **40** to the pipe **28** is such that this connection may be readily made regardless of substantial variations in the size, shape, and the like of the conduit **28**. The nozzle of the construction is relatively small and may thus be easily manipulated and the switch from soapy to clear water or the reverse thereof may be made without the necessity of the operator laying down the nozzle to actuate the valve. After the washing operation is completed, the nozzle may be placed on any suitable support, which may be either the drain, as illustrated, or a suitable support associated with the soap container.

In Figures 10 to 17 inclusive, a modified form of nozzle is disclosed, this nozzle being more particularly adapted for the washing of automobiles, busses, and the like. The modified nozzle is, however, similar to the first-described form of nozzle in that it is provided with a plurality of discharge orifices, a plurality of fluid supply conduits and a means for controlling communication between said supply conduits and said discharge orifices.

Referring then more particularly to Figures 10 to 17 inclusive, the numerals **91ª** and **95ª** designate rinsing fluid and washing fluid conduits respectively. It is to be understood that these conduits may be connected to a source of fluid supply and to a source of washing compound such for example as soap in the manner described with reference to the first form of the invention or in any other desired manner.

The conduits **91ª** and **95ª** are tapped into a valve body **145**, the conduit **91ª** being spaced vertically above the conduit **95ª** in the manner clearly illustrated in Figure 11 of the drawings. The valve body is provided with discharge passages **146**, **147**, and **148** located adjacent its upper end and a discharge passage **149** located adjacent its lower end. Connected to the passages **146** and **148** are spray pipes **150** while connected to passage **147** is a high pressure nozzle **151** which is adapted to discharge a pressure stream of the fluid for the purpose of washing car wheels and the like. Connected to passage **149** is a nozzle **152** to which a washing brush or the like may be secured in a manner which will hereinafter be more fully described.

Rotatably mounted in the valve body is a valve formed of the plug **155** and a surrounding sleeve **156**. The plug and the sleeve are held in proper position within the valve body by a spring **157** which engages the plug valve **155** and a cover **158** fixed to the top of the valve body.

The sleeve and plug valve are normally compelled to rotate together by means of a ball **160** which is resiliently urged into a recess **161** formed in a knob **162** fixed to the end of the stem **163** of the plug valve **155**. The ball **160** is carried by an extension **164** of an actuating lever **165**, this lever being secured to a vertical extension of the sleeve **156** as at **166**. The vertical extension of the sleeve extends through a slot **167** formed in the cover **158**, the extent of this slot determining the limits of the rotative movement of the valve plug and its surrounding sleeve.

The valve plug is provided adjacent its upper end with radially extending passages **170**, **171**, **172**, and **173**, while the sleeve is provided with ports which may register with these passages as clearly illustrated in Figure 13 of the drawings. Adjacent its lower end the valve plug is provided with a passage or bore **180** and the sleeve **156** is provided with ports **181** which may be brought into registration with this bore.

The valve is movable to four positions for controlling the supply of fluid to the several discharge orifices of the nozzle body. In one position illustrated in Figure 17 of the drawings, washing fluid such for example as soapy water, is supplied directly from the conduit **95ª** to the discharge passage **152** by way of bore **180** and ports **181**. When the valve is in this position the flow of fluid into the valve housing from the conduit **91ª** is cut off as clearly illustrated in Figure 16 of the drawings. Thus, with the valve in this position the only discharge from the nozzle will be the discharge of a washing fluid by way of passage **152**.

The second position which the valve may assume is illustrated in Figure 13 of the drawings and by reference to this figure it will be noted that the bore **180** and ports **181** are moved out of registration with the conduit **95ª** so that the flow of washing fluid is cut off. In this position, however, bore **171** in the valve body registers with conduit **91ª** while bores **170**, **173** register with passages **146** and **148** respectively with the result that clear water is supplied from the conduit **91ª** to the spray pipes **150** which may be used for rinsing purposes.

The third position which the valve may assume is shown in Figure 14 and by reference to this figure it will be noted that the clear water conduit 91a is directly connected by way of bores 170 and 172 to the passage 147 and thus to the high pressure discharge nozzle 151. With the valve therefore in this position a high pressure stream of clear water is available for washing the wheels and the like of the vehicle.

As brought out before, the sleeve 156 is normally compelled to rotate with the valve plug 155, the two being rotated together by actuation of the lever 165. The sleeve 156 may at any time however, be rotated relative to the valve plug by holding the valve plug stationery by means of handle 162 and by then rotating the sleeve by lever 165 and this relative rotation of the valve plug and the sleeve cuts off the flow of both fluids through the valve housing as clearly illustrated in Figure 15 of the drawings. Obviously, when it is desired to again effect a discharge of fluid through the nozzle, the sleeve and plug valve may be returned to their original relative positions and the two then moved as a unit to any one of the positions previously described.

For the purpose of associating a brush with the passage 152 through which the soapy water is discharged, the following structure may be provided. The passage 152 is formed in a member 185 which is threadedly secured to the valve housing as clearly illustrated in Figure 11 of the drawings. Adjustable longitudinally of this member and adapted to be locked in engagement with any one of a series of recesses 186 formed in the upper side of the member 185 is a loop 187 which is adapted to embrace the handle of a brush not shown. A second loop 188 is carried by a member 189 which is detachably secured to the lower end of the valve housing 145 and this loop is adapted to embrace the brush handle adjacent the free end thereof in the same manner as the loop 122 embraces the free end of the brush handle 121. It will thus be apparent that with the two loops 187 and 188 a brush having a handle of practically any size or shape may be removably but securely attached to the valve housing and member 185. Further the brush will be in such a position that it will be contacted by washing fluid discharged from the passage 152, this fluid being deflected on to the brush by a suitable baffle 189 which is secured to the end of the member 185. It will be apparent that if desired, the member 185 may be removed and in its place there may be substituted a washing brush of usual construction adapted to have threaded connection to the valve body.

With this modified form of nozzle it will be apparent that the washing of cars and the like will be greatly facilitated. The nozzle construction may be made relatively small and light so that it may be readily manipulated. The fluid for supply to the nozzle may be obtained from any desired source and the soap container or like construction may be located at any desired point remote from the nozzle. With the nozzle grasped in one hand the operator may, by exerting pressure on the finger piece 165 with his thumb or forefinger, readily actuate the valve to effect the desired discharge of fluid from the nozzle. For washing purposes he may cause soapy fluid to be discharged through the passage 152 and onto the brush associated with this passage. As soon as the washing with soapy fluid is completed he may immediately rinse the object by cutting off the supply of soapy water to the passage 152 and by supplying rinse water to the spray pipes 150. For pressure cleaning he may effect a discharge of clear water through nozzle 151 and when the washing operation is completed he may cut off entirely the discharge of fluid from the nozzle by rotating the sleeve 156 relative to the plug valve 155.

As in the first described form of construction, the switch from soapy to clear water or the reverse may be made instantly without the necessity of first flushing the soap brush or clearing any long soapy water filled passages.

In Figures 18 to 22 inclusive a further modified form of nozzle is disclosed, this nozzle being more particularly adapted for the washing of windows or the washing of vertical sides of railroad cars or the like. In this construction a long handle 200 is provided, this handle carrying at its end the valve body 201 into which conduits 91b and 95b are tapped. The valve body is provided with passages 202 which communicate with a spray pipe 203 located beyond the forward end of the valve body.

Secured to one side face of the valve body is a brush 205 with which a passage 206 in the valve body cooperates. It will be noted by reference to Figure 20 that liquid supplied to the passage 206 is sprayed onto the brush 205 by means of the apertures 207 formed in a plate secured to the side of the valve body.

Rotatably mounted in the valve body is a plug valve 210 having bores 211, 212, 213, and 214. This valve plug is adapted to be rotated by a lever 215 disposed at the lower end of the handle 200 and connected to the valve plug by a link 216.

The arrangement is such that with the valve plug in one position such as illustrated in Figure 19, washing fluid such as soapy water will be supplied from conduit 95b to the passage 206 and thus to the brush 205. In a second position such as shown in Figure 21, bore 212 will register with conduit 91b while bores 211 and 214 will register with passages 202 so that clear water for rinsing purposes will be supplied to the spray pipe 203. In a third position such as illustrated in Figure 22 clear water will be supplied from conduit 91b to passage 206 and thus to the brush 205. In a fourth position not illustrated all of the bores in the valve plug will be out of registration with the conduits 91b and 95b so that no fluid whatever will be discharged from the nozzle.

If desired a suitabe wiper 220 may be carried by the pipes which connect the spray pipe 203 to the valve body 201, this being of particular utility when the device is utilized for washing windows. It is to be noted that since this nozzle is adapted to be most frequently used in a vertical position, the brush is so located that drippings from the same will not contact the surface being rinsed by clear water from the spray pipe 203. Further, it will be apparent that the switch to soapy or clear water discharge may be instantaneously made without the necessity of either washing the soapy brush or flushing out a long conduit filled with soapy water.

From the above it will be apparent that the invention provides a washing device which may be utilized for numerous washing operations. In each instance either cleaning fluid or a rinsing fluid may be discharged as desired without waiting for a tube or compartment filled with the previously used fluid to be emptied. This is of importance since it provides that only the amount

of cleaning fluid necessary for a satisfactory cleaning operation is utilized.

The switch to either rinsing or washing fluids may be instantaneously made and in each instance the nozzle is of such a construction that it may be readily manipulated to perform the desired washing operations.

In the last two described embodiments of the invention where the character of the washing operations permits the use of heavy conduits, screw couplings or positive lock connections and where a complete shut-off position of the valve core is provided, the taper of the valve plug is modified from that disclosed in the first embodiment to prevent automatic lifting upon an increase in pressure. In other words, these embodiments of the invention are constructed to operate under relatively high fluid pressures, if desired.

While the invention has been described with some detail it is to be understood that the description is for the purposes of illustration only and is not definitive of the limits of the inventive idea. The right is reserved to make such changes in the details of construction and arrangement of parts as will fall within the purview of the attached claim.

What I claim as my invention is:

In a washing device, a handle nozzle assembly including in combination a housing, a conduit for supplying a washing liquid to said housing, a conduit for supplying a rinsing liquid to said housing, a cleaning element secured to said housing, said housing having a cleaning liquid discharge port adapted to discharge cleaning liquid into contact with said cleaning element and said housing also having rinsing liquid discharge ports adapted to discharge rinsing liquid adjacent to but out of contact with said cleaning element, a single valve means within said housing adapted to selectively effect a discharge of cleaning fluid from said housing by way of said cleaning liquid discharge port or a discharge of rinsing liquid from said housing by way of said rinsing liquid discharge ports, a shield secured to said housing and enclosing the adjacent portions of said supply conduits, said shield constituting a grip, and a lever for actuating said valve means so positioned as to be adapted to be operated by that hand of the operator which is grasping the shield.

ORMOND H. PADDOCK.