Feb. 8, 1944. N. F. SMITH, JR 2,341,396

ELECTRIC DISCHARGE CIRCUITS

Filed June 4, 1940

Fig. 1.

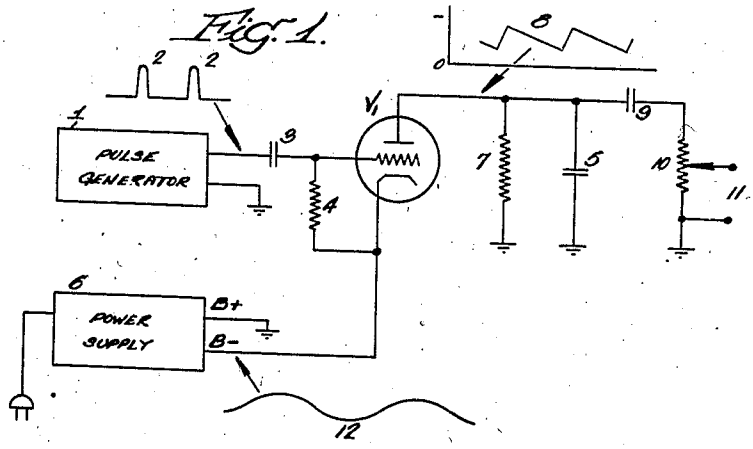

Fig. 2.

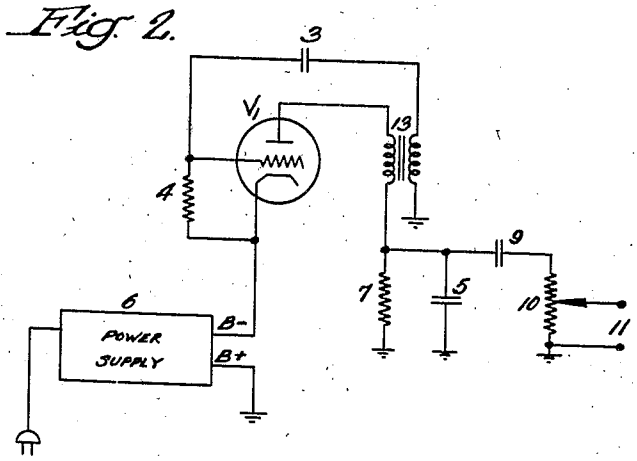

Fig. 3.

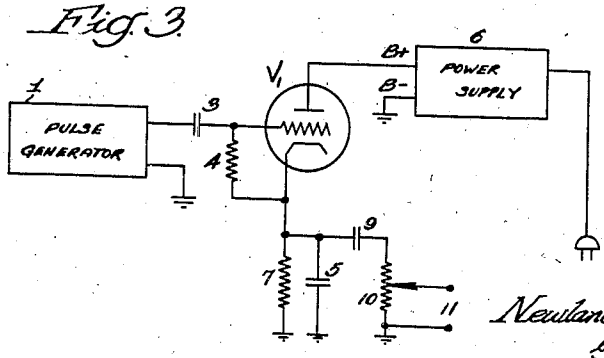

Inventor:-
Newland F. Smith, Jr.
by his Attorneys
Howson & Howson

Patented Feb. 8, 1944

2,341,396

UNITED STATES PATENT OFFICE

2,341,396

ELECTRIC DISCHARGE CIRCUIT

Newland F. Smith, Jr., Wyndmoor, Pa., assignor to Philco Radio and Television Corporation, Philadelphia, Pa., a corporation of Delaware

Application June 4, 1940, Serial No. 338,815
In Great Britain June 13, 1939

5 Claims. (Cl. 250—36)

This invention relates to electrical discharge circuits and more particularly to improvements in electrical discharge circuits such as are employed in the generation of sawtooth voltage waves or the like. Such sawtooth generators are of particular importance in the design of the deflecting circuits required in various electronic television systems.

In its simplest prior art form, a discharge circuit may comprise a capacitor arranged to be charged slowly through a high resistance to a predetermined level, after which it may be rapidly discharged by means of an electronic switch or the like, usually a vacuum tube whose plate impedance is controlled by its grid. An example of this type of discharge circuit is illustrated in Fig. 11 of United States Letters Patent No. 2,171,536. In circuits of this general character the high voltage charging current source is closely associated with the discharge circuit and as a result any transients, sudden variations in voltage, harmonics, or other disturbances due to erratic line voltage fluctuations, improper filtering, or the like, are transferred to the discharge circuits with a resulting distortion of the desired wave form. In high fidelity television systems this distortion may be evidenced by unsteadiness, flicker, and various non-linear effects in the reproduced pictures. It is therefore an important feature of this invention to provide an electrical discharge circuit for the generation of sawtooth waveforms and the like, in which the discharge circuits are divorced or isolated from the high voltage source during the greater and more important portion of each cycle.

According to this invention, there is provided an electrical discharge circuit comprising a capacitor, means including a source of periodically recurrent pulse signals, a source of unidirectional current and an electronic switching means for periodically charging said capacitor to a predetermined voltage, means including an impedance for discharging said capacitor at a predetermined rate, and means including said electronic switching means for isolating said capacitor and said impedance from said source of unidirectional current during the discharge portion of each cycle.

The invention may best be understood by reference to the accompanying drawing in which

Fig. 1 is a diagrammatic illustration of one form of the invention employed as a generator of a sawtooth wave whose frequency is determined by the frequency of an input signal,

Fig. 2 is a schematic diagram illustrating the invention applied to a sawtooth wave generator of the blocking tube oscillator type, and

Fig. 3 is a modification of the circuit illustrated in Fig. 1.

In Fig. 1, the pulse generator 1 represents a source of periodically recurring pulse signals 2 which may be applied to the control electrode of a vacuum tube V_1 arranged to function as an electronic switch. This vacuum tube may be provided either with a fixed grid bias or with a self bias. A self bias may be provided by a suitable choice of values for the coupling capacitor 3 and leak resistor 4, as is well known in the art. The constants are preferably such that the vacuum tube remains biased below the point of plate current cut-off except in the presence of a pulse 2, during which time the tube conducts and permits the capacitor 5 to be charged to a predetermined potential from a power supply source 6. Between pulses the charging current source, i. e., the power supply 6, is disconnected from the capacitor 5, since the tube V, is then non-conducting, and the capacitor is permitted to discharge through the shunt resistor 7. Thus there is generated the sawtooth wave 8 which may be supplied to a suitable output circuit, such as that comprising the coupling condenser 9, the potentiometer 10, and the output terminals 11. The charging portion of the cycle, during which time the power supply is connected to the capacitor 5 as described, is represented by the steeper portions of the sawtooth wave 8. During the discharge portion of each cycle, represented by the portions of the sawtooth wave 8 having the lesser slope, the power supply 6 is completely disconnected from the discharge circuit 5—7 by virtue of the fact that the grid of the tube V_1 is biased below cut-off, as mentioned above.

The power supply 6 may be of the usual form which supplies a unidirectional current when connected to an alternating current source. It has been found that in spite of the usual filtering employed in such power supply units, the output thereof may include certain undesired variations due, for example, to erratic line voltage fluctuations, transients, or to inadequate filtering. This undesired component is represented generally at 12.

In order to prevent the superposition of this fluctuation upon the output of the discharge circuit 5—7, it is an important feature of the invention that there be provided means for isolating this circuit from the power supply circuits for at least the greater part of each cycle. By means of the novel arrangement of circuit elements con-

templated by the invention, this end is accomplished, and moreover is accomplished without the introduction of additional elements. Thus it will be observed that the capacitor 5 and its discharge path 7 are connected to the power supply 6 (through the vacuum tube V_1) only during the relatively short conducting period of the tube V_1; but even during this short period the capacitor 5 is partially isolated from the fluctuations in the output of the power supply, as a result of the series impedance of the vacuum tube V_1, which, in combination with the shunt admittance of the capacitor 5 itself, provides a low-pass filter effect between the power supply 6 and the output terminals 11.

If desired, the device herein described may be arranged to supply its own pulse signals, after the manner of the blocking tube oscillator, by suitably coupling the plate and grid circuits of tube V_1. Thus, in Fig. 2, a transformer 13 is employed to provide the necessary grid-to-plate circuit coupling to permit the generation of self-sustaining oscillations. The desired sawtooth signal appears across the discharge circuit 5—7 as described in connection with Fig. 1. This device is essentially a blocking tube oscillator and operates in the manner of such an oscillator, as described in the application above mentioned, but in this instance the tube is employed additionally as an electronic switch as described above in connection with Fig. 1. If desired, it is of course possible to synchronize the circuit of Fig. 2 with an external source of signals by coupling the external source to the grid-cathode circuit of the tube V_1, as is well understood in the art and as described in the above-mentioned application.

In Fig. 2, as in Fig. 1, the tube V_1 is biased below cut-off during the discharge portion of each cycle, and hence during that time the discharge circuit 5—7 is substantially disconnected from the power supply 6, since the coupling between the power supply 6 and discharge circuit 5—7 by way of the grid leak 4, coupling capacitor 3 and transformer 13 is negligible due to the high impedance of the grid leak 4. Equivalent circuit elements in Figs. 1 and 2 have been designated similarly, and in view of the evident similarity between the figures, further description of the latter figure is deemed unnecessary.

As a possible variation of Figs. 1 and 2, the positions of the power supply 6 and the discharge circuit 5—7 (with its associated output circuit 9—10—11) might be interchanged, with B+ connected to the anode of V_1 and B— connected to ground or to some equivalent point of constant potential. The discharge circuit would in such case be connected between ground and the cathode of V_1. The operation would be substantially the same as in the devices illustrated in the drawing except that the phase of the sawtooth waves would be reversed. This variation, applied to the circuit of Fig. 1, is shown in Fig. 3 wherein the circuit elements are designated with numerals employed for corresponding elements in Fig. 1.

Although the invention has been described with particular reference to the embodiments of the drawing, it will be understood that the invention is capable of various forms of physical expression, and is not to be limited to the specific disclosures.

I claim:

1. An electrical discharge circuit comprising a thermionic valve having at least cathode, grid, and anode elements, a capacitor having one terminal connected to said anode and its other terminal directly connected to a point of fixed potential, a source of unidirectional anode voltage having undesired voltage fluctuations in the output thereof connected between said cathode and said point of fixed potential, means connected to said grid for periodically affecting the impedance of said valve to rapidly charge said capacitor to a predetermined voltage, and means including an impedance for slowly discharging said capacitor at a predetermined rate, said valve serving to electrically isolate said capacitor and said impedance from said fluctuating source of anode voltage during the discharge portion of each cycle.

2. An electrical discharge circuit comprising a thermionic valve having at least cathode, grid, and anode elements, a capacitor having one terminal connected to said anode and its other terminal directly connected to a point of fixed potential, a source of unidirectional anode voltage having undesired voltage fluctuations in the output thereof connected between said cathode and said point of fixed potential, means connected to said grid for periodically affecting the impedance of said valve to rapidly charge said capacitor to a predetermined voltage, and means comprising a resistor connected in shunt with said capacitor for slowly discharging said capacitor at a predetermined rate, said valve serving to electrically isolate said capacitor and said resistance from said fluctuating source of anode voltage during the discharge portion of each cycle.

3. An electrical discharge circuit comprising a thermionic valve having at least cathode, grid, and anode elements, a capacitor having one terminal connected to said anode and its other terminal directly connected to a point of fixed potential, a source of unidirectional anode voltage having undesired voltage fluctuations in the output thereof connected between said cathode and said point of fixed potential, means for supplying to said grid short periodically-recurrent pulse signals, means for rendering said valve non-conductive except in the presence of said pulse signals, whereby said capacitor is periodically charged through said valve to a predetermined voltage, and means including an impedance for slowly discharging said capacitor at a predetermined rate, said valve serving to electrically isolate said capacitor and said impedance from said fluctuating source of anode voltage during the discharge portion of each cycle.

4. An electrical discharge circuit comprising a thermionic valve having at least cathode, grid, and anode elements, a capacitor having one terminal connected to said anode and its other terminal directly connected to a ground point, a source of unidirectional anode voltage having undesired voltage fluctuations in the output thereof connected between said cathode and said ground point, means connected to said grid for periodically affecting the impedance of said valve to rapidly charge said capacitor to a predetermined voltage, and means including an impedance for slowly discharging said capacitor at a predetermined rate, said valve serving to electrically isolate said capacitor and said impedance from said fluctuating source of anode voltage during the discharge portion of each cycle.

5. An electrical discharge circuit comprising a thermionic valve having at least cathode, grid, and anode elements, a capacitor having one terminal connected to said anode and its other terminal directly connected to a point of fixed potential, a source of unidirectional anode voltage having undesired voltage fluctuations in the out-

put thereof connected between said cathode and said point of fixed potential, means coupling the anode circuit of said valve to said grid, whereby the circuit is enabled to generate self-sustained oscillations of predetermined wave shape and frequency which periodically affect the impedance of said valve to rapidly charge said capacitor to a predetermined voltage, and means including an impedance for slowly discharging said capacitor at a predetermined rate, said valve serving to electrically isolate said capacitor and said impedance from said fluctuating source of anode voltage during the discharge portion of each cycle.

NEWLAND F. SMITH, JR.