# PATENT SPECIFICATION (11) 1 584 732

1 584 732

(21) Application No. 24412/77 (22) Filed 10 June 1977

(31) Convention Application No. 2 626 537 (32) Filed 14 June 1976 in

(33) Fed. Rep. of Germany (DE)

(44) Complete Specification published 18 Feb. 1981

(51) INT. CL.³ B63B 5/24 9/06

(52) Index at acceptance B7A 204 EB MD





## (54) PLASTICS CONSTRUCTIONS


(71) I. ALBERT PFLEGER, a citizen of the German Federal Republic, of Wachterstrasse 19, 8170 Bad Tölz, Western Germany, do hereby declare the invention, for

which I pray that a patent may be granted to me, and the method by which it is to be performed, to be particularly described in and by the following statement:—

This invention relates to substantially rigid plastics constructions and methods of making substantially rigid plastics constructions, particularly but not exclusively in the form of shells for hulls of watercraft.

A known type of boat hull shell is constructed as a sandwich structure of individual foam plastics plates, with their butt joints sealed with a filler and their surfaces covered with fiber-reinforced thermosetting plastics laminates. The form frame employed in this case is an internal core which is removed after the outer laminate has become set, so that the interior surfaces can also be covered with a laminate. The assembly of the core and the time-consuming manufacturing process result in high production costs of such boat hull shells. In addition, there are further operations required to provide the basic shell with other structural parts such as bulkheads, decks, and superstructures.

Another known type of boat shell is produced with the aid of an external form frame by first applying the eventual outer skin, or varnish coat, respectively, of the boat hull to the glazed or polished interior wall surface of the form frame and then applying a sufficient number of layers of a glass-fibre reinforced thermosetting plastics laminate to obtain a fully-laminated shell having sufficient rigidity and strength. Again, fittings and additional interior stiffeners have to be installed subsequently to complete the shell. The fabrication of such negative forms, which have to be very stable, is very expensive. Further, in case such an external form cannot be taken apart in two halves, it is unsuitable for forming boat shells having reclined ribs, a reclined stern frame, or possibly a recessed deck edge. In addition, an external form of this type is in continuous use for as long a period of time as the shell takes to set, whereby the profitability of this production method is put into question, particularly in the case of smaller boatbuilding enterprises.

Further known are plastics shells of the type referred to particularly in the buildings and sanitary installations fields, e.g. wall panels consisting of individual thermoplastic elements having in most cases a circular or rounded cross section. The elements are placed side by side in direct contact with one another or with spacer elements therebetween for providing a finished shell with a three dimensional curvature and embedded between laminates of glass fibre reinforced thermosetting plastics. A substantial excess of the thermosetting plastics material is provided for filling the unavoidable interstices or grooves between individual elements and for obtaining a highly form-retaining finished structure in connection with the laminates. Due to its design and method of construction a shell of this type has insufficient form-retaining strength for employ as a boat hull. A sufficiently strong boat hull shell can only be obtained by integrating additional stiffening structural members commonly employed in boat building.

According to one aspect of the invention a substantially rigid plastics construction comprises a plurality of elongate flexible elements made of thermoplastics material, each elongate element for the forming of a basic assembly being arranged in contact with the adjacent element or elements and extending longitudinally, the elements defining on both sides outwardly opening longitudinal grooves along their points of mutual contact, hardenable filler material filling said grooves, and laminates of fibre-reinforced hardenable plastics material arranged on the two surfaces of the basic assembly formed by the elongate elements and the filler materials.

Such a constructnon thus has longitudinal stiffeners formed by the filler material filling the longitudinal grooves.

For further strengthening, a particular embodiment of the invention provides that one or both surfaces of the basic assembly have formed therein channels extending transversely and/or obliquely to the direction of the longitudinal grooves, these channels being filled with hardenable filler material, and covered with the laminate. In this manner, the construction, particularly in the case of a boat hull comprises an integral stiffening framework formed of longitudinally and transversely extending cords of said filler material and adapted to absorb high loads in the lonigtudinal and transverse directions as well as strong warping forces.

In a further embodiment a surface of the basic assembly is embossed with additional channels extending parallel to the lonigtudinal grooves, the grooves, and channels being filled with hardenable filler material, and the so-treated surfaces being covered with said laminate. The stiffening framework thus formed by intersecting cords of filler material confers very good shape-retaining properties to a boat shell, which may therefore be used as a torsion-resistant, rugged shell for bigger boats.

In a futher embodiment including hollow elements openings or cutouts in the form of flutes, grooves, channels or recessed areas extending from one wall up to the opposite wall of an element are milled or cut in the basic assembly, filled with hardenable filler material, and covered with laminates at the surface of the basic assembly.

The filler material introduced in these openings or cut-outs forms a particularly solid connection with the elements as it partially penetrates into the cavities thereof prior to becoming set. In addition, these areas are particularly shape-retaining and stiffened, since the thus-integrated filler material is homogeneously linked with the outer laminate.

In an advantageous embodiment, even more effective stiffening is provided by removing both element walls in the area of the openings or cutouts, filling said openings or cutouts with filler material, and covering them with laminates at both surfaces of the assembly. In this case, the very strong and dense mass of the filler material forms rigid webs in the construction, for example a boat hull shell homogeneously linked with the laminates on both surfaces. In the respective areas, the walls of the thermoplastic elements are completely removed. The optical impression of a smooth surface of the construction is nevertheless retained, since the location of the rigid webs of solid filler material is not visible from the outside. These areas may preferably be employed for fastening fittings, enabling very high loads to be introduced into the boat hull through the filler material. In another aspect, these webs divide the hollow elements into separate hermetically sealed chambers, with their sealing effect unimpaired by any fastening elements for the fixtures anchored in the filler material.

In a preferred embodiment of the boat hull shell according to the invention, the filler material filling said grooves has reinforcing material embedded therein. These reinforcements are perferably applied in a criss-cross pattern and may be intertwined, knotted or interwoven at their points of intersection, so that they are extremely well suited to absorb any warp forces and tension loads applied to a boat hull shell, whereby said boat hull shell has shape-retaining properties otherwise found only in boat hulls with structurally expensive stiffening elements.

According to another aspect of the invention a method for producing a substantially rigid plastics construction comprises the steps of placing a plurality of elongate flexible elements of thermoplastic material on a form frame determining the final shape of the construction with longitudinal sides of adjacent elements contacting one another, fixing at least one element to said form frame at spaced locations along its length, connecting adjacent elements for forming a basic assembly in such a way that outwardly opening longitudinal grooves are formed between their contacting longitudinal sides, filling said grooves with hardenable filler material, and covering the two so-formed surfaces of the basic assembly formed by the elements and filler material with fibre-reinforced hardenable plastics laminate, thereby bonding the laminate to the surfaces of the basic assembly.

In order to provide a construction, for example a boat hull shell having a stiffening frame consisting of longitudinal and transverse cords, prior to filling said longitudinal grooves, the surfaces of the basic assembly are embossed with a plurality of channels extending transversely and/or obliquely to the longitudinal direction of the elements by means of a heated press tool, and the grooves and channels are subsequently filled with said filler material.

Since in certain cases a construction, for example a boat hull shell, according to the invention is to be provided with additional, longitudinally stiffening cords in areas subjected to particularly high loads, additional longitudinal channels may be embossed in the elements and the grooves and channels and additional channels are filled with hardenable filler material.

In an advantageous embodiment including hollow elements at selected locations of a surface of the basic assembly, the assembly may be cut out or milled down to the

opposite wall of an element or elements and the so formed opening for example, flutes, grooves, channels or cutout areas are filled with hardenable filler material prior to applying the covering laminates.

This process step is readily accomplished with the aid of conventional milling or cutting machines and results in stiffening webs dividing the elements into separately sealed sections. The filling material penetrates into a part of the elements cavities and provides a good sealing effect. After becoming hard, the filler material filling these areas forms solid anchoring points for fittings or other elements. The openings or cutouts may be milled or cut from the outside or the inside of a boat hull shell, as desired.

In a slightly modified embodiment it may be convenient to apply a laminate to one surface of the basic assembly subsequently in specific areas of the basic assembly opposite wall portions of sections of some elements within the basic assembly are removed by milling or cutting from the opposite surface, and the so-formed openings are filled with filler material and covered with laminates.

The first-named laminate acts as a supporting layer during cutting or milling and subsequent filling of the so formed opening. After filling of the openings and covering the other surface of the basic assembly with the laminate, the construction is formed with very stiff transverse webs which may serve as integral ribs. It is also possible, of course, to bolt ribs provided in the interior of a construction in the form of a boat hull shell to these areas, since the homogeneous integrated ribs of hardened filler material provide for a better anchoring of the fastening elements than the compound body formed of the thermoplastic material of the elements and the filler material.

In a further embodiment, resulting in substantially improved shape-retaining properties of the produced construction, reinforcements of carbon fibres, plastics fibres, glass fibres, glass fibre rovings or metal having a high tensile strength are embedded in the filler material for the grooves. Such reinforcements are suitably in the form of strips, wires, rovings, ribbons, cords, rods, tubes, or extrusions. The employed reinforcing material, or the form of the reinforcement, respectively, is to be matched to the loads to be expected for the construction produced. Mixtures of different materials or mixtures of different materials in different forms may also be employed. It is thus possible, for instance, to employ different types of reinforcements in the longitudinal and transverse or oblique directions of the construction.

It is advantageous to employ elements of uniform cross-scetion having two substantially parallel side surfaces connected at their upper edges by an upper surface forming a shallow V-shaped channel, and at their lower edges, by a U-shaped rounded bottom, so that each element may have its bottom surface engaged with the channel of the adjacent element, and one of its side surfaces with the form frame. This feature permit constructions having various three-dimensional curvatures to be constructed in a simple manner, ensuring at all times that the longitudinal grooves for forming the stiffening frame of filler material for obtaining the required shape-retaining properties are formed between the elements.

According to the invention it is also possible, however, to employ elements in which the channel and the bottom surface are unilaterally offset with respect to the symmetry axis of the element's section, and to employ elements in which the height of the rounded bottom surface is greater than the depth of the V-shaped channel. Such elements ensure in a simple manner that even in areas of extreme curvature of the construction there are formed longitudinal grooves for receiving the filler material and possibly, the reinforcement embedded therein.

In the case of a hull shell according to the invention has to be light and should have good floating properties, and may have strongly curved sections in the longitudinal direction which should also be perfectly shaped, an emhodiment proposes to employ extruded tubular elements which are divided into individual separate chambers by embossing of transverse channels. In this case the transverse channels, which are to be filled with the filler material and possibly, with the reinforcement, are embossed to such a depth that one sidewall of the element section is engaged with the opposite sidewall and is possibly welded thereto to form a fluid-tight seal. The formation of such chambers ensuring sufficient buoyancy of the boat hull shell even in case of damage of the boat shell's skin is facilitated by the thermoplastic material of the tubular elements. The operation of welding the sidewalls of the elements together in the area of the transverse channels may of course be facilitated by applying an adhesive to the interior surfaces of the elements.

In another embodiment of the invention the tubular elements are divided into individual, separately sealed chambers by cutting openings and/or cut-outs into said elements and subsequent filling with filler material. This leads to the formation of transverse ribs for stiffening, with the filler material partially penetrating into the cavities of the elements to become integrally

locked therewith and providing a reliable sealing effect.

Storing and handling of the elements as well as the performance of the method according to the invention may be considerably facilitated, if the elements are assembled in the longitudnal direction of individual sections by forming at least one longitudinal slit in one end of one such length, compressing the element along the length of said slit, applying an adhesive thereto and introducing it into an end of an adjacent individual section. In this case a boatbuilder does not have to consider the length of available tubular elements, but is able to assemble the elements for any desired size of a boat hull shell.

According to a further feature, applicable in particular to facilitating the production of boat hull shells, it is proposed that at least one element at a time is clamped to the adjacent element or elements already fixed to the form frame by means of at least one U-shaped assembly clamp adapted to be bent to the contour of that portion of the form frame to which the respective element is to be attached, whereupon the clamped element is affixed at predetermined points to the form frame and/or connected at selected sections to the adjacent element before the assembly clamp or clamps are removed. The assembly clamps may be formed of a resilient metal or plastics material. They may replace additional tools or helpers, so that a single boatbuilder is enabled to perform the method.

Since a boat hull shell requires additional structures and provisions for being transformed into a serviceable boat, which structures have to be adapted to the shape of the boat hull shell, and since a form frame determining the final shape is in any case required, it is proposed for producing a boat hull shell that the form frame consists of structural elements to be integrated into the finished boat hull shell, such as ribs, bulkheads, transverse walls, stringers, keel, and stern frame stem, which structural elements are operatively connected to the shell at areas of mutual contact. This feature serves to considerably lower the production costs of a boat built from the boat hull shell, and the time for building the boat is appreciably shortened.

In order to conform to these requirements, one embodiment provides that prior to beginning the assembly of the boat hull shell, at least two strips of reinforcing fibre material are applied to edge portions of the form frame coming into contact with the basic assembly, said strips extending beyond said edge portions at both sides thereof and being temporarily attached to said form frame, and during application of the laminate to the interior surface of the basic assembly, said strips are laid down on the interior surface to be bonded to the laminate, or layers thereof, respectively, in an overlapping manner, and that finally corner strips of reinforcing fibre material are bonded into the so-formed inside corners.

As a further preferred feature it is proposed that openings or cutouts are cut in areas of the basic assembly at which said structural elements, are to be connected and subsequently filled with hardenable filler material, and said elements are connected, preferably bolted, to such areas of the basic assembly.

At these areas, the said elements are anchored very firmly to the boat hull shell, since the applied forces are absorbed only by the filler material. The elements in this case may be selectively fastened from the inside or from the outside. By this feature it is also avoided that bolts or other fasteners penetrating into cavities of the tubular elements form leaks therein, through which condensed moisture or water from the outside might permeate between the element walls.

In another embodiment the invention provides that the form frame is a reusable internal or external mould piece to be removed subsequently. This modification is particularly suitable in cases in which interior structures for a boat hull shell are fabricated at another location and are to be installed subsequently into the finished shell. The external or internal mould piece may thus be employed for a series production of boat hull shells according to the invention.

Since the overall optical impression is of particular importance for a modern boat hull shell, and since the cruising properties and the overall performance of a boat depend to a large extent on a faultless surface, particularly below the waterline, irregularities appearing on the surfaces of the basic assembly may be smoothed by hot pressing before the grooves are filled and possibly reinforced.

In a latter stage in which a deck structure is mounted adjacent stringers of a boat hull the deck structure consisting of juxtaposed elements covered with a laminate is mounted adjacent the stringers, a laminate of a lower portion of the boat hull shell being extended continuously into the laminate of the deck structure. The employ of the elements also for the deck structures saves additional expensive materials and results in a lightweight deck structure improving the buoyancy of a boat and its stability with respect to the location of its centre of gravity. The uninterrupted expanse of the laminate increases the resistance of the juncture between the boat hull shell and the deck structure against damage and intrusion

of water.

The invention may be performed in various ways and one specific embodiment with possible modifications will now be described by way of example with reference to the accompanying drawings in which:—

Fig. 1 shows a partially complete shell assembled on a forme frame which forms part of the completed hull;

Fig. 2 shows a portion of a sectional view taken along the line II-II in Fig. 1;

Fig. 3 shows a further detail of Fig. 1;

Fig. 4 shows a detail of two tubular elements prior to their joining;

Fig. 5 shows a tubular elongate element which has been embossed with a channel;

Fig. 5*a* shows a detail of an alternative,

Fig. 5*b* shows a sectional view taken along the line B-B in Fig. 5a,

Fig. 5*c* shows a further alternative structural detail in a sectional view taken along the line C-C in Fig. 5*a*,

Fig. 6 shows a further structural detail,

Fig. 7 shows a top plan view along line VII-VII of the detail shown in fig. 2,

Fig. 8 shows the performance of a step in the method of the invention proceeding from the stage shown in Fig. 7,

Fig. 9 shows a further method step in the method, and

Fig. 10 shows a cross-sectional view of a portion of a finished boat hull.

Prior to the production of a boat hull shell 1, a form frame 2 is assembled. The form frame is assembled from structural elements functionally required in the finished boat. The form frame 2 shown in Fig. 1 comprises a stern transom 2*a*, one or more ribs 2*b* or transverse walls 2*c*, or bulkheads 2*d*, respectively, stringers 2*e* delimiting the rim of the boat hull shell to be assembled, a keel or keels on 2*f* interconnecting the aforementioned elements, and a bow stem frame 2g determining the shape of the bows. The shape of the form frame determines the final shape of the finished boat hull shell. Subsequently a plurality of elongate thermoplastic elements are applied to the outsides of the frame 2 and engaged with one another to form a basic shell. The inner and outer surfaces are finally covered with laminates 4 of fibre-reinforced thermosetting plastics materials subsequent to certain intervening steps to be described.

Fig. 2 is a partial cross-section of Fig. 1, taken along the line II-II therein and showing a front view of a portion of the forward transverse bulkhead 2*d* with a lateral edge determining the contour 28 corresponding to the finished boat hull shell. Below stringer 2*e* which is connected to bulkhead 2d, the basic boat hull shell 1 is formed by placing thermoplastic tubular elements 3′ side by side adjacent one another in an engaged manner. Prior to this step, the edge portions of bulkhead wall 2*d* are covered with at least two strips 23 of a reinforcing fibre fabric usually employed for forming the reinforced thermosetting laminate, such strips 23 having a greater width than the thickness of the transverse bulkhead 2*d* wall and being temporarily affixed to it 2d by means of adhesive tape 5. Subsequently the tubular elements 3′ are placed thereon and fastened at individual points by means of bolts, nails, rivets 6 or the like. It is not necessary to fasten each element 3′ in this manner, it being sufficient to thus fasten every third or fourth element. Subsequently an adhesive 7 is applied to sections of the abutting longitudinal sides of the elements.

Elements 3′ are tubular and of uniform cross section. They each have two substantially parallel sidewalls 8, connected along their upper ends by a shallow V-shaped channel 9 and along their lower edges by a U-shaped, rounded bottom wall 10. The cross-sectional configuration of tubular elements 3′ is of great importance for the boat hull shell 1 and the method for making same, as will be explained.

The steps of placing the tubular elements 3′ adjacent one another and fastening them to the form frame 2 is considerably facilitated by the use of U-shaped assembly clamps 11 having resilient legs readily deformable by bending. With the aid of such assembly clamps 11, individual tubular elements are clamped together until they are fastened, or interconnected, respectively, at individual points by bolts or the like 6, and at individual sections by means of adhesive 7, respectively. The adhesive employed hardens rapidly, so that assembly of the tubular elements 3′ may be carried out in a continuous operation.

The cross-sectional configuration of the tubular elements 3′, which may of course also be solid permits strongly flared or curved portions of the boat hull shell to be formed in a simple manner, since the abutting bottom walls 10 and V-shaped channels 9 engage one another in the manner of a hinge. To this effect, the depth of V-shaped channels 9 is less than the height of U-shaped rounded bottom wall 10, so that in any case longitudinal, outwardly opening grooves 12 are formed between adjacent tubular elements 3′, along their points of mutual contact said longitudinal grooves 12 being of fundamental importance for the subsequent process steps. Grooves 12 are present on the outside as well as on the inside of the boat hull shell.

Fig. 3 is a partial perspective view of a portion adjacent the stern frame 2*a*. Solid elements 3 (employed in this) are placed adjacent one another in the manner described above to form similar longitudinal

grooves 12 therebetween.

After all the elements 3 have been fitted on the form frame 2, the next step is carried out by filling the longitudinal grooves 12 with a thermosetting or other hardenable filler material 13 in such a manner that substantially smooth surfaces are obtained. The filler material 13 may be a *per se* known thermosetting or otherwise hardenable filler composition having thermal expansion characteristics similar to those of the elements and the laminates 4 to be subsequently applied. Further the filler material 13 should be of a type that will bond intimately to the surfaces of shapes 3 as well as with the laminates 4 applied at a later stage. The filler material 13 filling longitudinal grooves 12 sets to form a stiffening, shape-retaining skeleton for the finished boat hull shell.

As further shown in Fig. 3, the shape-retaining properties or stiffness of the boat hull shell may be further improved by embossing channels 14 extending transversely and/or obliquely to the lonigtudinal direction of the elements 3 by means of a heated embossing tool, one of said channels 14 being shown in Fig. 3. The transverse channels 14 are also filled with the filler material 13, so that in combination with the filler material 13 in longitudinal grooves 12, there is formed a stiffening skeleton in the boat hull shell, consisting of intersecting ribs or cords of the set filler material. This integrated stiffening skeleton greatly improves the resistance of the boat hull shell against impact loads, torsional and warp forces, and bending loads. In surface areas of the boat hull shell exposed to extreme loads, additional lonigtudinal channels 15 may be embossed, also by means of a heated embossing tool, said additional channels 15 to be also filled with the filler material in order to condense the network of stiffening ribs or cords in the boat hull. The transverse or oblique channels 14 as well as the additional longitudinal channels 15 may be provided at the outer and/or at the inner surface of the boat hull shell.

In the case of boat hull shells of larger dimensions, to obtain higher hull strength or desired improved shape-retaining properties, reinforcing material 16 may be embedded in the filler material 13 in grooves 12 and channels 14, 15. The reinforcing material 16 may consist of high tensile-strength carbon fibres, synthetic fibres, glass fibres, glass fibre rovings or of metals in the form of strips, wires, cords, rods, tubes, extrusions or the like. At intersection points, the reinforcing material 16 may be intertwined, knotted, or interwoven. It is also possible to emboss grooves and channels 14, 15 in the surface of the boat hull shell in accordance with a predetermined pattern and to embed the reinforcing material 16 in the filler material 13 in the form of prefabricated webs or nets. This constitutes a considerable simplification in production.

The tubular elements 3′ shown in Fig. 2 do not have to extend integrally over the entire length of the boat hull shell 1. They may rather, as shown in Fig. 4, be assembled from individual sections. To this effect, one end portion of an individual section is formed with a longitudinal slit 17 therein, compressed in the direction of arrows 18, coated with an adhesive, and introduced into the adjacent end of a further section in the direction of arrows 19. Connections of this type do not impair the overall strength of the boat hull shell. The sectionel elements simplify stockpiling and may be assembled to any desired length.

As shown in Fig. 5, the transeverse channels 14 may be embossed to such depth that the deformed sidewall 8 of the tubular elements abuts the non-deformed sidewall 8 thereof and is welded thereto in contact area 20. This results in the formation of sealed chambers 21 in the longitudinal direction of the elements contributing to the buoyancy of the finished boat hull shell and its resistance against mechanical damage. The bonding of sidewalls 8 in areas 20 may of course be facilitated by an adhesive applied to the interior surfaces of tubular elements 3′.

A modified assembly is shown in Figs. 5*a* to 5*c*. The embossed channels are here replaced by openings milled or cut into the boat hull shell, or basic shell, These openings or cutouts may be in the form of channels or grooves 37 or have any other shape as shown by reference numeral 38. As depicted in Figs. 5*b* and 5*c*, respectively these cutouts 37, 38 may extend from one sidewall 8 to the opposite sidewall 8, or be formed by removing both sidewalls 8 of the tubular elements, so that only a laminate 23 previously applied to one side thereof remains standing in the respective area. In both cases, thermosetting filler material 13 is introduced into the cutouts 37 or 38, such filler material forming domed projections 39 protruding into the tubular elements 3 to become fixedly interlocked therewith. The rigid web or block of filler material formed in this manner serves to divide the cavities of the respective tubular elements 3′ into individually sealed chambers, for stiffening the boat hull shell, and for anchoring any elements to be attached to the boat hull shell. In Fig. 5*b*, cutout 37 is provided adjacent a transverse rib 2*b* which may be anchored in this area by means of bolt 6. The connection of the

transverse rib with the boat hull shell is further improved by the formation of a joint connection 26 in the laminate 23. After filling with filler material 13, the opening 38 shown in Fig. 5*c*, if formed over a sufficient length, provides an extremely stiff integrated rib member. Opening 38, shown in dotted lines in Fig. 5*a*, may be used for anchoring a boat fitting 40 by means of screws 41, in which case a laminate 24 has to be applied prior to attaching the fitting 40. Through this fitting, which carries an attachment member 42, it is possible to apply large point forces to the boat hull, since the hardened filler material 13 is homogeneously bonded to laminate layers 23 and 24 and interlocked with the basic shell through domed projections 39. It is of course also possible to embed fitting 40 in the filler material 13 prior to its becoming set in such a manner that attachment member 42 projects through the outer laminate 24 of the finished boat hull shell.

Openings 37, 38 may of course be milled or cut into the basic shell from both sides thereof.

Another cross-sectional configuration for the elements 3, 3′ is shown in Fig. 6. Each element 3, 3′ comprises a channel 9′ and a rounded bottom surface 10′ offset to the same side of the symmetry axis 22. This cross-sectional configuration results in the formation of very pronounced longitudinal grooves 12′ adapted to receive a great volume of filler material 13, with or without reinforcing material 16, for increasing the shape-retaining properties of the finished boat hull shell.

Fig. 7 shows a sectional view taken along the line VII-VIII in Fig. 2 to depict the manner in which elements 3, 3′ are disposed adjacent the edge of the bulkhead 2*d*. The edge of the bulkhead 2d is chamfered to a wedge-shape, and the strips 23, as already stated, are temporarily attached by means of adhesive tape 5.

While Fig. 7 shows an earlier step in the formation of the boat hull shell, Fig. 8 depicts the same portion of the shell in its finished state. In Fig. 8 it is seen that the individual layers of the interior laminate 4 are bonded to strips 23 in an overlapping arrangement, so that a continuous laminate covering is also formed on the interior surface of the basic shell formed by elements 3, 3′. In addition, a force-transmitting connection is formed between the bulkhead 2*d* and the basic shell by applying a filler strip 27 of triangular cross section, preferably also formed of a thermosetting or hardenable plastics material, to the chamfered edge portion, and by bonding corner strips 26 of reinforcing fibre material to the interior corners formed at both sides of the abutment between bulkhead 2*d* and the shell, one leg of said corner strips 26 being bonded to the surface of bulkhead 2*d*, and the other, to the overlapping portions of laminate 4 and strips 23. This also seals the attachment area of bulkhead 2*d*, so that the latter may serve as a transverse bulkhead in the finished boat hull.

In areas of pronounced curvature of the boats' walls under construction, the juxtaposed elements 3, 3′ may form a fluted surface having raised portions 29, 30 (Fig. 9). Since it may not be possible to level this surface by means of the subsequently applied laminate, the raised portions 29, 30 may be flattened prior to filling the longitudinal grooves 12 by softening the thermoplastic material of elements 3, 3′ with the aid of a heated flatiron 31 and dislocating it by moving flatiron 31 in the direction of arrows 32, see Fig. 9. This step permits the outer surface of the basic shell to adapt exactly to the desired contour 28 of the finished boat hull.

Fig. 10 shows the manner in which a deck structure is joined to basic shell 1. To this effect, a shell part 33 is affixed to stringer 2*e* to serve as a support for deck beams 34. On deck beams 34, elements 3, 3′ are placed in side-by-side relation, the resulting longitudinal grooves are filled with filler material 13 and, if desired, reinforcing material 16, and the resulting structure is covered with a deck laminate 35 which may also consist of a fibre-reinforced thermosetting plastics material. Particularly along the deck's edge 36 which is subjected to substantial forces, the arrangement is such that the outer laminate 4 of the basic shell 1 extends continuously into the laminate 35 of the deck structure.

The form frame 2 shown in Fig. 1, consisting of structural elements to be integrated in the finished boat hull, may, of course, be replaced by a form frame in the form of an internal or external mould piece, which is removed after completion of the basic shell 1 for repeated use. In such cases, the assembly is started by forming the basic shell with its stiffening skeleton from elements 3, 3′ and covering the accessible surface of the shell with the laminate. After the laminate has become set, the mould piece is removed, so that the other surface may be filled, stiffened and laminated. If further structural elements are to be installed in the so-formed "raw" boat hull shell, they may be operatively and sealingly connected therewith in the manner shown in Figs. 7 and 8.

If tubular elements 3′ are employed, the ends thereof at the stem and stern portions are closed with filler material prior to applying the laminates, so that in case of damage to these portions, water is prevented

from penetrating into the tubular elements, and the elements are considerably stiffened of these portions.

The laminates are applied in accordance with conventional techniques, such as by hot rolling, application by hand, or fiber spraying, employing conventional boat-building materials, particularly glass fibre reinforced polyester resins.

The intermediate step of levelling uneven areas by means of a flatiron is usually required only if shapes having a very large cross section are employed or in areas of very strong curvature of the boat hull shell. Normally a very even and smooth surface is obtained by the application of the filler material, so that hot pressing is not necessary.

The above-described method offers the remarkable advantage that it enables even laymen to build their own boats of any desired size and design with the aid of simple building plans and instructions.

Boats, particularly sailboats of the described construction have shown the remarkable advantage that the boat hull shells at a given size and water displacement are considerably lighter than those of conventional construction, so that, at a similar final weight, they may be equipped with a correspondingly heavier ballast keel than other boats in the same weight and measurement class. Heavier keel weights, however, result in a greatly improved position of the centre of gravity, so that sailboats of this construction are able to absorb higher wind forces at a reduced list or may attain higher speeds than other boats of comparable size due to reduced draught and a smaller submerged surface area.

Boats constructed with the described boat hull shell are characterized by the following advantageous properties:—

The boat hull shell has a resistant, lightweight and unsinkable skin of non-rotting plastics material.

In relation to its weight, the boat hull shell has exceptionally high strength against tensile forces, torsion and impact loads.

The boat hull shell is constructed without the employ of expensive forms, auxiliary parts and other expensive apparatus. Such boats may be profitably produced as individual designs as well as in a series production.

The subsequent and mostly rather difficult installation of interior structures and fittings is for the major part anticipated by the construction method.

The boat hull shell and the deck structure are combined to form a seamless boat hull.

At a relative low weight, the structure of the boat hull shell has a high displacement of its own and comprises a considerable volume of entrapped air contributing to making the boat unsinkable.

Sound and thermal insulation values of the boat hull shell are at an optimum.

The boat hull shell is likewise suitable for extremely light, small boats as well as for ship's hulls of conditionally unlimited size.

WHAT I CLAIM IS:—

1. A substantially rigid plastics construction comprising a plurality of elongate flexible elements made of thermoplastics material, each elongate element for the forming of a basic assembly being arranged in contact with the adjacent element or elements and extruding longitudinally, the elements defining on both sides outwardly opening longitudinal grooves along their points of mutual contact, hardenable filler material filling said grooves, and laminates of fibre-reinforced hardenable plastics material arranged on the two surfaces of the basic assembly formed by the elongate elements and the filler materials.

2. A construction according to claim 1, comprising channels extending transversely and/or obliquely to the direction of the longitudinal grooves in a surface of the basic assembly said channels being filled with a hardenable filler material and covered with said laminate.

3. A construction according to claim 2, in which the channels are formed in both surfaces of the basic assembly.

4. A construction according to claim 2 or claim 3, including additional channels extending parallel to the lonigtudinal grooves in a surface of the basic assembly, the additional channels being filled with hardenable filler material and covered with said laminate.

5. A construction according to claim 4, in which said channels parallel to the grooves are formed on both surfaces of the basic assembly.

6. A construction according to claim 1, including hollow said elements and comprising openings extending from one wall of said hollow elements to the opposite wall thereof, said openings being filled with hardenable filler material and covered with said laminate at the surface of the basic assembly.

7. A construction according to claim 4 when appendent to claim 1, wherein said openings have been formed by removing both walls of said elements, said openings being filled with said filler material and covered with said laminates at both surfaces of the basic assembly.

8. A construction according to any of claims 1 to 5, wherein the filler material has reinforcing material embedded therein.

9. A construction according to claim 8, wherein said reinforcing material is arranged

in a criss-cross pattern.

10. A construction according to claim 9, wherein said reinforcing material is intertwined, knotted, or interwoven at its crossing points.

11. A construction as claimed in any preceding claim, in which the elements are of uniform cross-section.

12. A method for producing a substantially rigid plastics construction comprising the steps of placing a plurality of elongate flexible elements of thermoplastic material on a form frame determining the final shape of the construction with longitudinal sides of adjacent elements contacting one another, fixing at least one element to said form frame at spaced locations along its length, connecting adjacent elements for forming a basic assembly in such a way that outwardly opening longitudinal grooves are formed between their contacting longitudinal sides, filling said grooves with hardenable filler material, and covering the two so-formed surfaces of the basic assembly formed by the elements and filler material with fibre-reinforced hardenable plastics laminate, thereby bonding the laminate to the surfaces of the basic assembly.

13. A method according to claim 12, in which prior to filling said longitudinal grooves, the surfaces of the elongate elements are embossed with a plurality of channels extending transversely and/or obliquely to the longitudinal direction of said elements by means of a heated press tool, and said grooves and so-formed channels are subsequently filled with said hardenable filler material.

14. A method according to claim 13, in which additional longitudinal channels are embossed in said elements, and said grooves and channels and additional channels are filled with hardenable filler material.

15. A method according to claim 12, including hollow elongate elements and in which at selected locations of a surface of the basic assembly said basic assembly is cut or milled down to the opposite wall of an elongate element or elements, and the so-formed openings are filled with hardenable filler material prior to applying the covering laminates.

16. A method according to claim 12, including hollow said elements and in which a laminate is applied to one surface of the basic assembly subsequently in specific areas of the basic assembly opposite wall portions of sections of some elements within the basic assembly are removed by milling or cutting from the opposite surface, and the so-formed openings are filled with filler material and covered with laminate.

17. A method according to any one of claims 12 to 16, in which said filter material has embedded therein a reinforcing material in the form of carbon fibres, synthetic fibres, glass fibres, glass fibre rovings, or metals of high tensile strength.

18. A method according to claim 17, in which said reinforcing material is in the form of strips, wires, rovings, ribbons, cords, rods, tubes or extrusions.

19. A method according to any one of claims 12 to 18, in which elongate elements are employed which have uniform cross-section, with two substantially parallel side surfaces, the upper edges of which are connected by an upper surface forming a shallow V-shaped channel, and the lower edges are connected by a U-shaped rounded bottom surface, and the elongate elements are arranged such that for each two adjacent elements the bottom surface of one engages the channel of the other, with one side surface of each element engaging the form frame.

20. A method according to claim 19, in which elongate elements are employed in each of which the channel and the bottom surface are laterally offset to one side of an axis of symmetry when viewed in cross-section.

21. A method according to claim 19 or claim 20, in which the height of the rounded bottom surface is greater than the depth of the V-shaped channel of each elongate element.

22. A method according to any of claims 12 to 21, in which elongate elements are employed which are extruded tubular members and which, by embossing of transverse channels, are divided into individual separate chambers.

23. A method according to any of claims 12 to 22, in which the elongate elements are divided into separate, individually sealed chambers by cutting openings and/or cut-outs into said elements and subsequent filling of said openings and/or cutters with hardenable filler material.

24. A method according to any of claims 12 to 23, in which the elongate elements to be used for forming a basic assembly are assembled from individual sections in the lonigtudinal direction by cutting at least one longitudinal slit in one end of a section, compressing said end portion along the extent of said slit, applying an adhesive to said end portion, and introducing it into an end of an adjacent section.

25. A method according to any of claims 12 to 23, in which at least one of said elongate elements at a time is clamped to adjacent element or elements already affixed to the form frame by means of at least one U-shaped assembly clamp adapted to be bent to the contour of that portion of the form frame to which the respective element is to be attached, whereupon the clamped element is fixed at selected points to the

form frame and/or connected at selected sections with the adjacent element, before the assembly clamp or clamps are removed.

26. A method according to any of claims 12 to 25, for producing a boat hull shell in which said elongate elements are affixed to a form frame which consists of structural elements to be integrated with the finished boat hull shell and said structural elements are all incorporated into the basic assembly at areas of mutual contact.

27. A method according to claim 26, in which cutouts or openings are cut in areas of the basic assembly at which said structural elements are to be connected and subsequently filled with hardenable filler material, and said structural elements are connected to said basic assembly at these areas.

28. A method according to claim 27, in which the structural elements are bolted to the basic assembly.

29. A method according to any of claims 26 to 28, in which edge portions of the form frame coming into contact with the basic assembly are covered with at least two strips of reinforcing fibre material, said strips extending beyond the width of said edge portions at both sides thereof and being temporarily affixed to said form frame, and during application of said hardenable laminate to the interior surface of the basic assembly, said strips are laid down on said interior surface to be bonded to said laminate, or layers thereof, respectively, in an overlapping manner, and that finally corner strips of reinforcing fibre material are bonded into the so-formed inside corners.

30. A method according to any of claims 12 to 25 in which a form frame is used which is designed as a reusable internal or external mould piece which is subsequently removed.

31. A method according to any of claims 12 to 30, in which uneven areas occurring on the surfaces of the basic assembly after forming the same are levelled by hot pressing prior to application of said filler material.

32. A method according to any of claim 26 31, in which a deck structure is mounted adjacent stringers of said hull shell, said deck structure consisting of juxtaposed elongate elements covered by a laminate and a laminate of a lower portion of the boat hull shell is extended continuously into the laminate of the deck structure.

33. A method as claimed in any of claims 12 to 32 in which the elements are initially of uniform cross-section.

34. A substantial rigid construction substantially as hereinbefore described with reference to and as shown in Fig. 1, 2, 7 and 8 of the accompanying drawings, or as modified as shown in Fig. 3 or Fig. 4, or Fig. 5, or Figs. 5b, or Fig. 5c, or Fig. 6, or Fig. 10, of the accompanying drawings.

35. A construction as claimed in any of claims 1 to 12, in the form of a shell for the hull of a watercraft.

36. A method for producing a substantially rigid construction substantially as hereinbefore described.

37. A substantially rigid plastics construction made by a method as claimed in any of claim 12 to 33 or claim 35.

38. A kit of parts for forming a construction as claimed in claim 1 comprising a plurality of elongate flexible elements made of thermoplastics material, hardenable filler material, and material for said laminates.

Agents for the Applicant:
WILSON, GUNN & ELLIS,
41-51 Royal Exchange,
Manchester M2 7DB.

Printed for Her Majesty's Stationery Office by The Tweeddale Press Ltd., Berwick-upon-Tweed, 1980.
Published at the Patent Office, 25 Southampton Buildings, London, WC2A 1AY, from which copies may be obtained.

1584732 COMPLETE SPECIFICATION

8 SHEETS *This drawing is a reproduction of the Original on a reduced scale*

Sheet 1

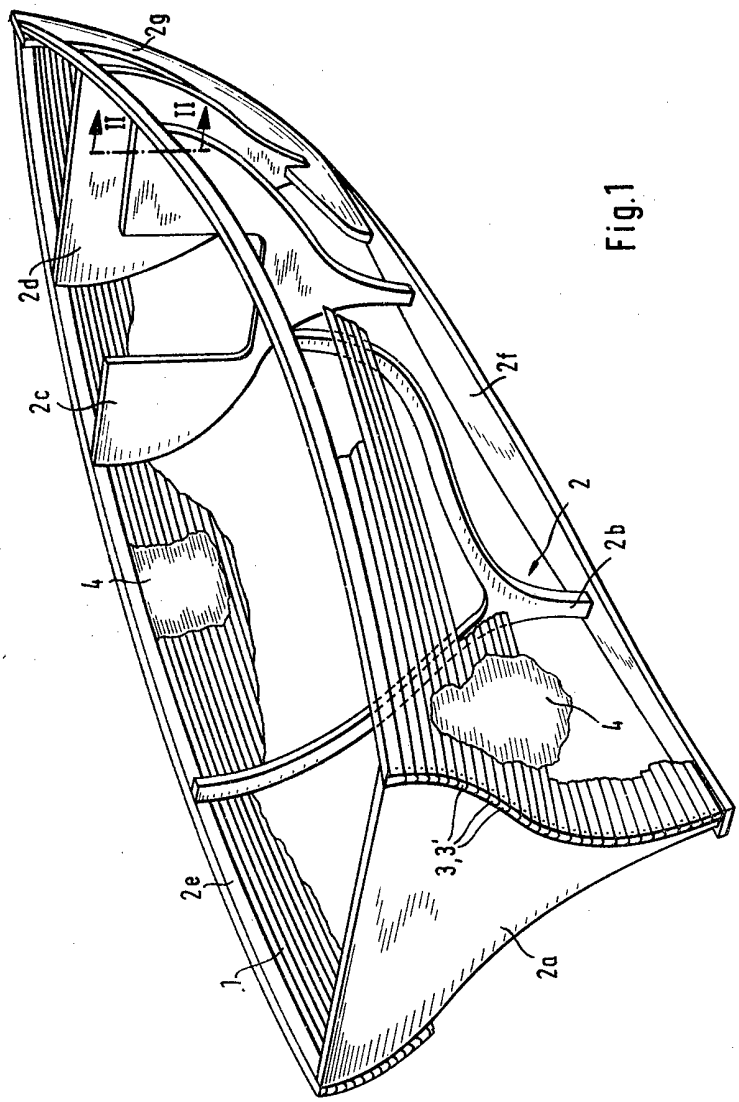


Fig.1

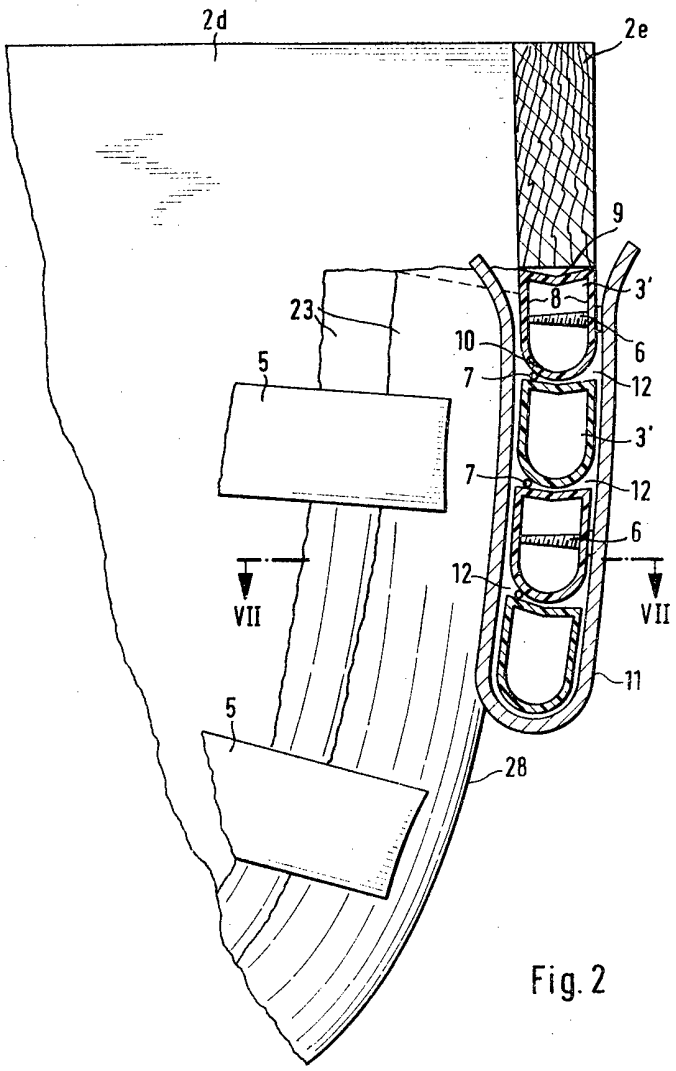


Fig. 2

1584732 COMPLETE SPECIFICATION
8 SHEETS *This drawing is a reproduction of the Original on a reduced scale*
Sheet 3

Fig. 4

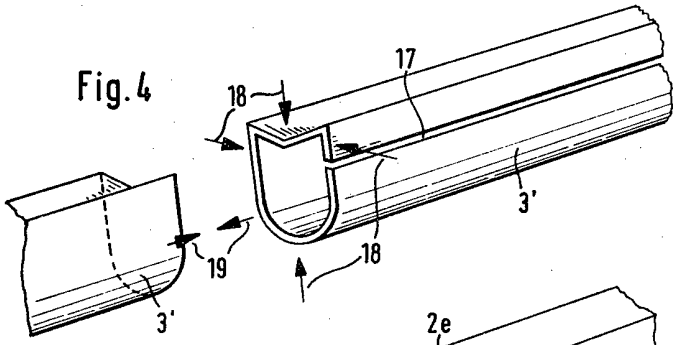


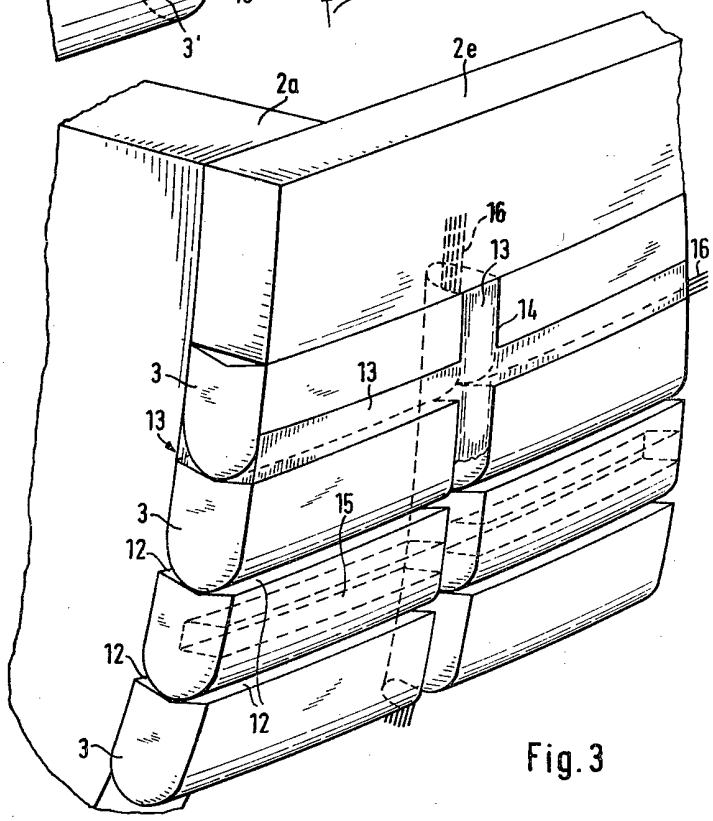


Fig. 3

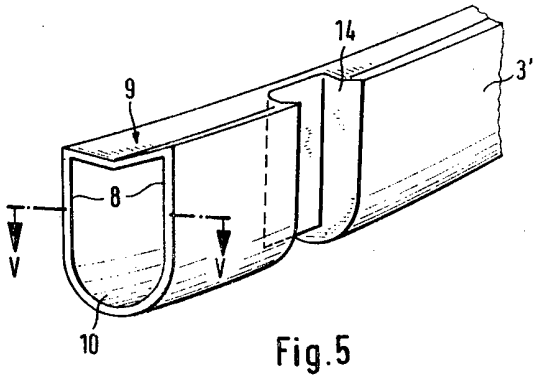


Fig.5

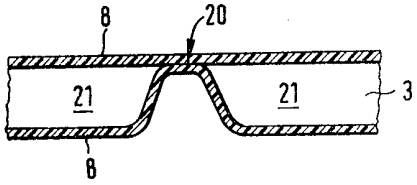


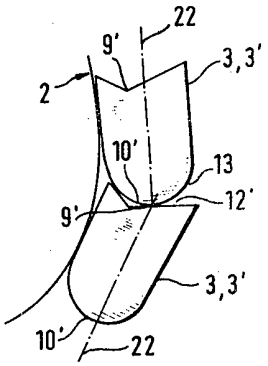


Fig.6

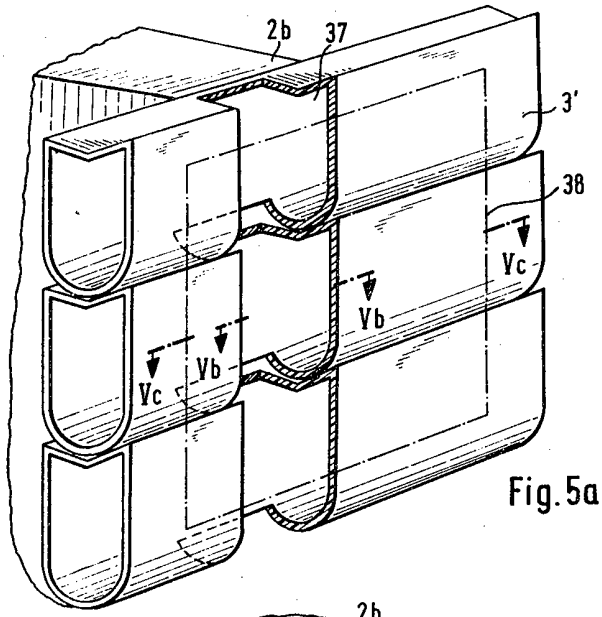


Fig.5a

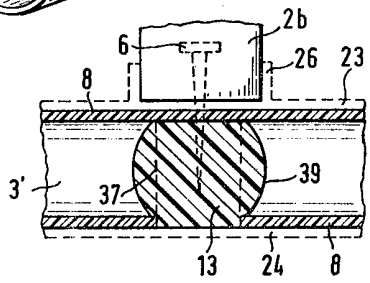


Fig.5b

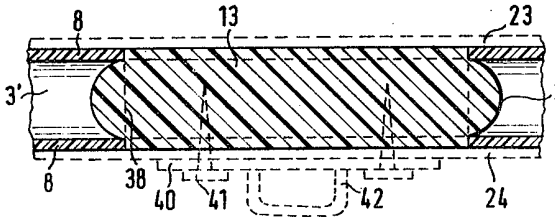


Fig.5c

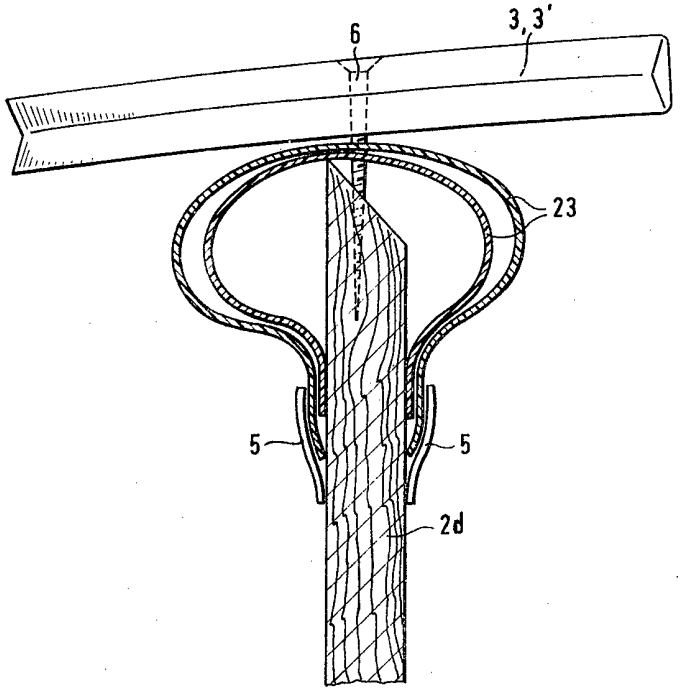


Fig.7

1584732 COMPLETE SPECIFICATION
8 SHEETS *This drawing is a reproduction of the Original on a reduced scale*
Sheet 7

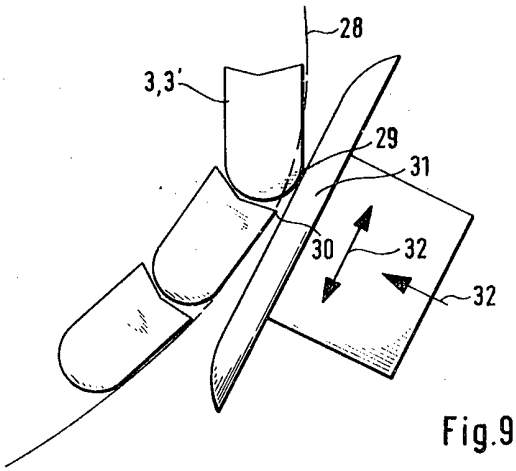


Fig.9

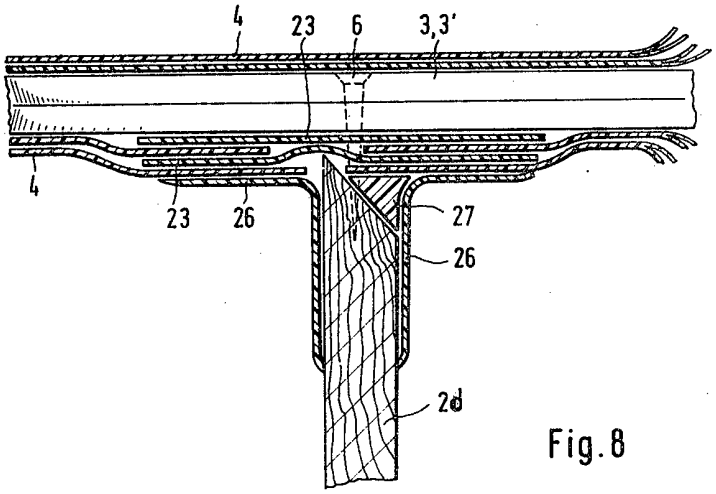


Fig.8

1584732 COMPLETE SPECIFICATION
8 SHEETS *This drawing is a reproduction of the Original on a reduced scale*
Sheet 8

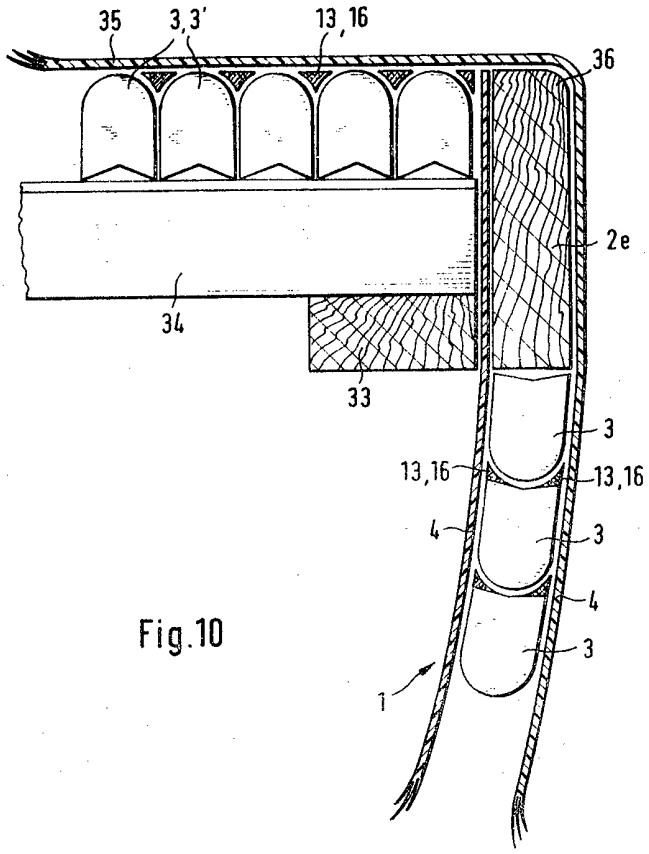


Fig.10