Office de la Propriété Intellectuelle du Canada
Un organisme d'Industrie Canada

Canadian Intellectual Property Office
An agency of Industry Canada

CA 2574291 C 2013/08/06

(11)(21) **2 574 291**

(12) **BREVET CANADIEN**
CANADIAN PATENT

(13) **C**

(86) Date de dépôt PCT/PCT Filing Date: 2005/07/08
(87) Date publication PCT/PCT Publication Date: 2006/01/26
(45) Date de délivrance/Issue Date: 2013/08/06
(85) Entrée phase nationale/National Entry: 2007/01/17
(86) N° demande PCT/PCT Application No.: GB 2005/002691
(87) N° publication PCT/PCT Publication No.: 2006/008451
(30) Priorité/Priority: 2004/07/23 (GB0416476.0)

(51) Cl.Int./Int.Cl. *A47L 5/28* (2006.01), *A47L 9/10* (2006.01), *A47L 9/16* (2006.01), *A47L 9/32* (2006.01)

(72) Inventeur/Inventor:
GENN, STUART LLOYD, GB

(73) Propriétaire/Owner:
DYSON TECHNOLOGY LIMITED, GB

(74) Agent: MARKS & CLERK

(54) Titre : APPAREIL ELECTROMENAGER
(54) Title: A DOMESTIC APPLIANCE

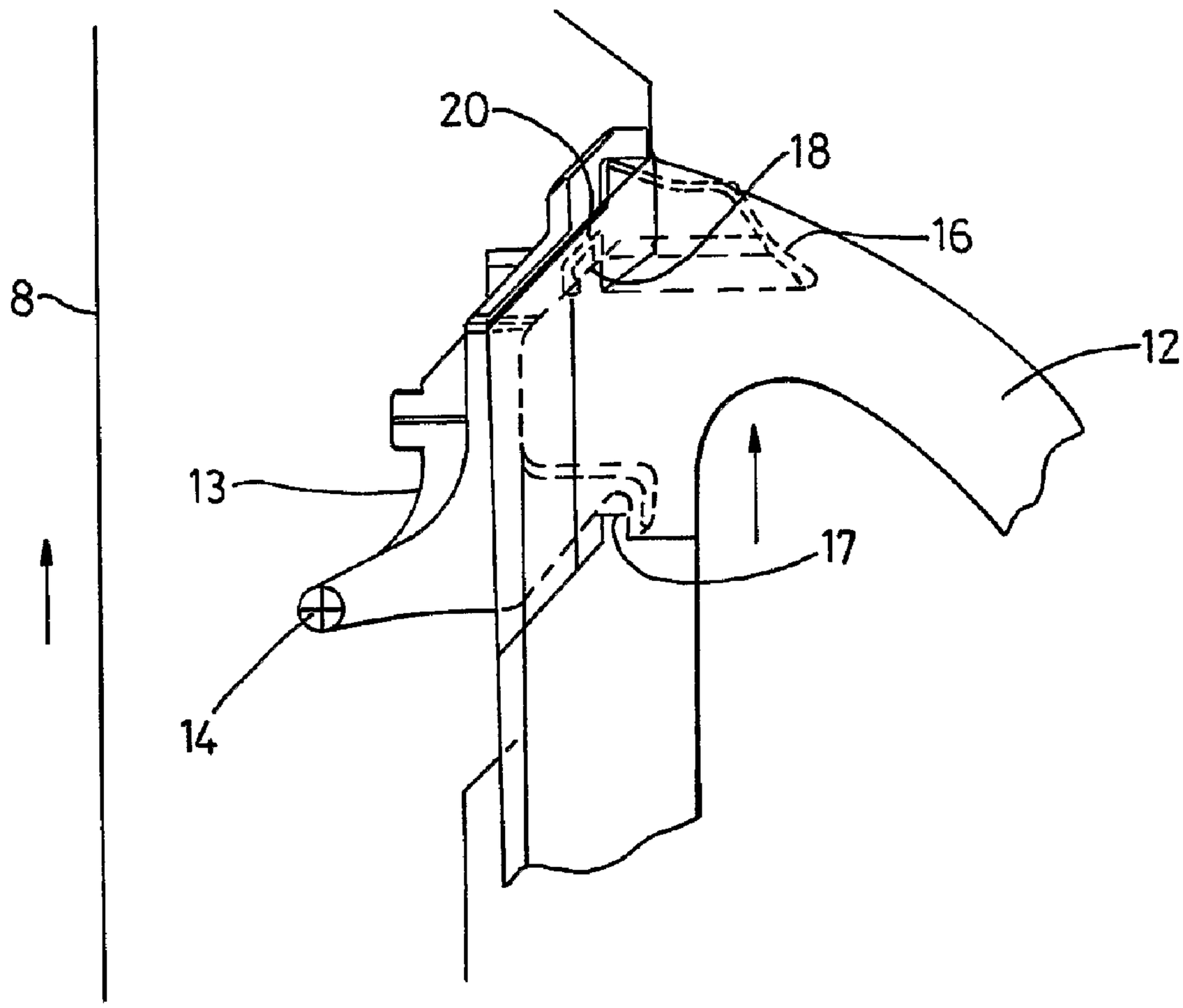

(57) Abrégé/Abstract:
A domestic appliance, such as a cyclonic vacuum cleaner (1), comprises a component, such as separating apparatus (3), carried by a chassis (2). A catch (11) is provided and is operable to release the component from the chassis. The component and the

(57) Abrégé(suite)/Abstract(continued):
chassis are able to move slightly with respect to each other. When the appliance is lifted, lugs (18) on the separating apparatus move into slots (20) on the chassis so as to inhibit release of the catch when the appliance is lifted. Thus, accidental release of the separating apparatus from the chassis is avoided.

(12) INTERNATIONAL APPLICATION PUBLISHED UNDER THE PATENT COOPERATION TREATY (PCT)

(19) World Intellectual Property Organization
International Bureau

(43) International Publication Date
26 January 2006 (26.01.2006)

PCT

(10) International Publication Number
WO 2006/008451 A1

(51) International Patent Classification[7]: A47L 5/28, 9/10, 9/16, 9/32

(21) International Application Number: PCT/GB2005/002691

(22) International Filing Date: 8 July 2005 (08.07.2005)

(25) Filing Language: English

(26) Publication Language: English

(30) Priority Data:
0416476.0 23 July 2004 (23.07.2004) GB

(71) Applicant *(for all designated States except US)*: **DYSON TECHNOLOGY LIMITED** [GB/GB]; Tetbury Hill, Malmesbury, Wiltshire SN16 0RP (GB).

(72) Inventor; and
(75) Inventor/Applicant *(for US only)*: **GENN, Stuart Lloyd** [GB/GB]; 91 Northern Road, Swindon, Wiltshire SN2 1PJ (GB).

(74) Agents: **HUCKER, Nerys** et al.; Intellectual Property Department, Dyson Technology Limited, Tetbury Hill, Malmesbury, Wiltshire SN16 0RP (GB).

(81) Designated States *(unless otherwise indicated, for every kind of national protection available)*: AE, AG, AL, AM, AT, AU, AZ, BA, BB, BG, BR, BW, BY, BZ, CA, CH, CN, CO, CR, CU, CZ, DE, DK, DM, DZ, EC, EE, EG, ES, FI, GB, GD, GE, GH, GM, HR, HU, ID, IL, IN, IS, JP, KE, KG, KM, KP, KR, KZ, LC, LK, LR, LS, LT, LU, LV, MA, MD, MG, MK, MN, MW, MX, MZ, NA, NG, NI, NO, NZ, OM, PG, PH, PL, PT, RO, RU, SC, SD, SE, SG, SK, SL, SM, SY, TJ, TM, TN, TR, TT, TZ, UA, UG, US, UZ, VC, VN, YU, ZA, ZM, ZW.

(84) Designated States *(unless otherwise indicated, for every kind of regional protection available)*: ARIPO (BW, GH, GM, KE, LS, MW, MZ, NA, SD, SL, SZ, TZ, UG, ZM, ZW), Eurasian (AM, AZ, BY, KG, KZ, MD, RU, TJ, TM), European (AT, BE, BG, CH, CY, CZ, DE, DK, EE, ES, FI, FR, GB, GR, HU, IE, IS, IT, LT, LU, LV, MC, NL, PL, PT, RO, SE, SI, SK, TR), OAPI (BF, BJ, CF, CG, CI, CM, GA, GN, GQ, GW, ML, MR, NE, SN, TD, TG).

Published:
— *with international search report*

For two-letter codes and other abbreviations, refer to the "Guidance Notes on Codes and Abbreviations" appearing at the beginning of each regular issue of the PCT Gazette.

(54) Title: A DOMESTIC APPLIANCE

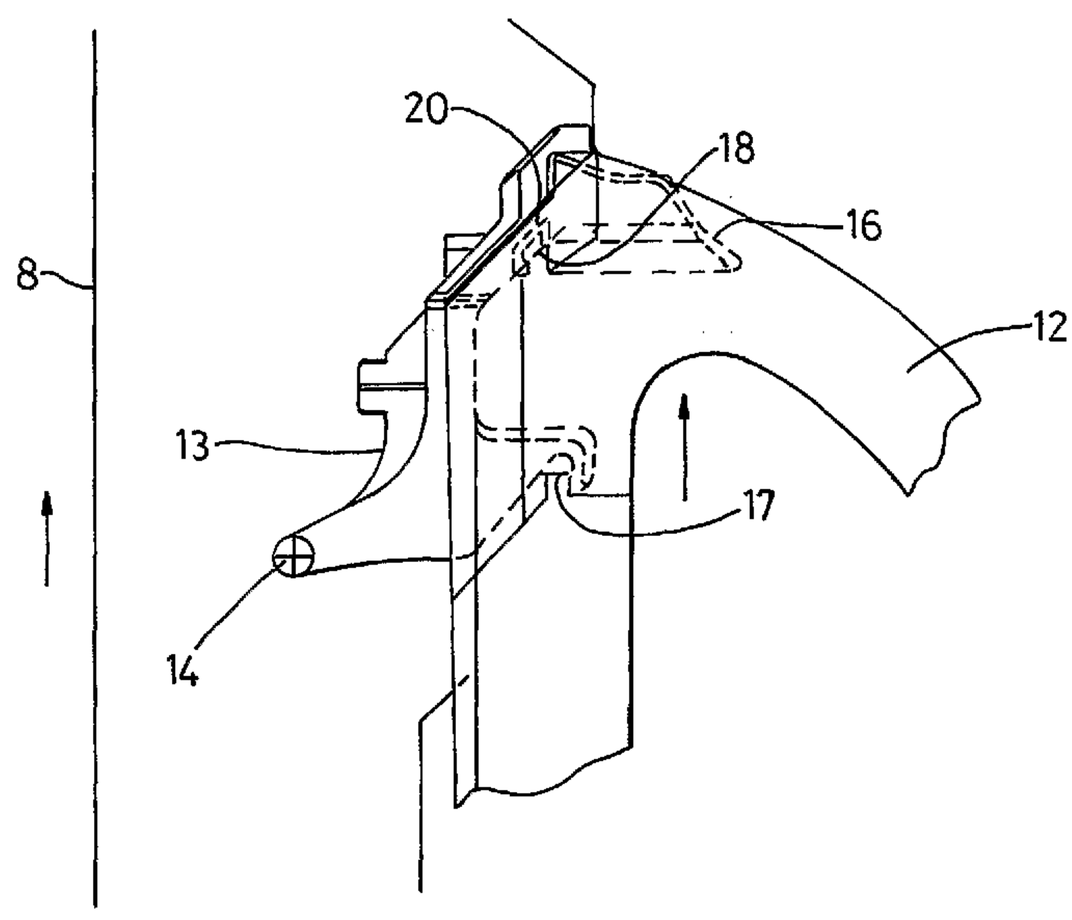

(57) Abstract: A domestic appliance, such as a cyclonic vacuum cleaner (1), comprises a component, such as separating apparatus (3), carried by a chassis (2). A catch (11) is provided and is operable to release the component from the chassis. The component and the chassis are able to move slightly with respect to each other. When the appliance is lifted, lugs (18) on the separating apparatus move into slots (20) on the chassis so as to inhibit release of the catch when the appliance is lifted. Thus, accidental release of the separating apparatus from the chassis is avoided.

WO 2006/008451 A1

A Domestic Appliance

The invention relates to a domestic appliance, such as a vacuum cleaner.

Vacuum cleaners which separate dirt and dust from an airflow without the use of a filter bag, so-called bagless vacuum cleaners, are becoming increasingly popular. Most bagless cleaners use cyclonic or centrifugal separation to spin dirt and dust from the airflow. By avoiding the use of a filter bag as the primary form of separation, it has been found possible to maintain a consistently high level of suction, even as the collecting chamber fills with dirt and dust.

In a typical cyclonic vacuum cleaner, an airflow in which dirt and dust is entrained enters a first cyclonic separator via a tangential inlet. The inlet causes the airflow to follow a spiral or helical path within a collection chamber so that dirt and dust is separated from the airflow. Relatively clean air passes out of the chamber whilst the separated dirt and dust is collected therein. In some cyclonic vacuum cleaners, the airflow is then passed to a second cyclone separator which is capable of separating finer dirt and dust than the upstream cyclone. The airflow is thereby cleaned to a greater degree so that, by the time the airflow exits the cyclonic separating apparatus, the airflow is almost completely free of dirt and dust particles. The dirt and dust is left behind inside the collecting chamber.

When the collecting chamber becomes full, a user typically removes the collecting chamber from the chassis of the machine, carries the chamber to a dust bin or refuse sack and empties the contents of the chamber into the bin or sack. The chamber may be emptied by inverting it. Alternatively, a manually operable catch may release the base portion of the chamber so that the dirt and dust falls out of the chamber into the bin or sack.

Typically, a handle is provided to enable the user easily to carry the collecting chamber to the bin or sack for emptying. Conveniently, the same handle may be employed by the user for lifting the vacuum cleaner in its entirety when the collecting chamber is attached to the chassis, to facilitate carrying the cleaner between different locations.

A problem which may be encountered with such appliances is that, when the user is carrying the appliance by means of the handle, he may accidentally release the catch holding the collecting chamber to the chassis. Thus, the chassis may be released completely from the chamber and may fall to the ground. This may cause damage to the chassis as well as being an inconvenience to the user.

The invention provides a domestic appliance comprising a component carried by a chassis and a catch operable to release the component from the chassis, wherein a portion of the catch on the component is arranged to move with respect to another portion of the catch on the chassis when the appliance is lifted, so as to inhibit release of the catch.

The provision of a catch that is not releasable when the appliance is lifted prevents the chassis and the component from being released accidentally from each other.

Advantageously, one portion of the catch comprises a lug, the other portion comprising a slot, the lug and slot being arranged to engage each other when the appliance is lifted. The lug and slot are advantageously arranged automatically to disengage from each other when the appliance is placed on a surface, such as a floor surface.

The catch may also comprise a pivotable member on one of the component and the chassis arranged to releasably engage in a lip on the other of the component and the

chassis. The pivotable member may be releasable from the lip against the force of resilient means.

The invention is particularly applicable to vacuum cleaners. The invention prevents a user from releasing the separating apparatus comprising a collecting chamber employed for collecting dirt and dust from the chassis when the user is carrying the vacuum cleaner.

A handle may be provided to enable the user to carry the appliance. When the invention is applied to a vacuum cleaner having separating apparatus, this handle may also be the handle provided for carrying the separating apparatus when it is removed from the chassis.

According to an aspect of the present invention there is provided a domestic appliance comprising a component carried by a chassis and a catch operable to release the component from the chassis, the catch comprising a catch portion on the component and a catch portion on the chassis, the component comprising a handle for lifting and carrying the appliance, wherein the component is arranged to move with respect to the chassis in response to the appliance being lifted by the handle, such that the catch portions move relative to one another to a position which inhibits release of the catch.

The invention will now be described, by way of example, with reference to the accompanying drawings, in which:-

Figure 1 is a side view of a domestic appliance constructed according to the invention in the form of an upright vacuum cleaner;

Figure 2 is perspective view of the cleaner of Figure 2, showing release of the separation apparatus;

Figure 3 is a side view of the cleaner of Figures 1 and 2 being carried by a user;

Figure 4a is a partly cut-away side view of part of a catch on the cleaner in a first position;

Figure 4b is a partly cut-away side view of the part of a catch of Figure 4a in a second position;

Figure 5a is a partly cut-away side view of the catch on the cleaner in the first position;

Figure 5b is a partly cut-away side view of the catch on the cleaner in the second position;

Figure 5c is a front view of part of the catch in the first position;

Figure 6a is a partly cut-away side view of the catch of Figures 5 in a third position; and

Figure 6b is a front view of part of the catch in the third position.

Like reference numerals refer to like parts throughout the specification.

Referring to Figures 1, an upright vacuum cleaner indicated generally by the reference numeral 1 comprises a main chassis 2 which supports dirt and dust separation apparatus 3 incorporating a collecting chamber 4. The lower part of the vacuum cleaner 1 comprises a cleaner head 5 for engaging with the floor surface. The cleaner head 5 has a downwardly facing suction inlet and a brush bar (not shown), mounted in the mouth of the inlet, for agitating the floor surface. The cleaner head 5 is pivotably mounted to a motor housing 6, which houses the motor and fan of the cleaner 1. Support wheels 7 are mounted to either side of the motor housing 6 for supporting the cleaner 1 and allowing movement across a floor surface.

A spine 8 of the chassis 2 extends upwardly from the motor housing 6 to provide support for the components of the cleaner 1. A cleaning wand 9 having a second dirty air inlet 10 is connected by way of a hose (not shown) to the chassis 2 at the base of the spine 8. The wand 9 is releasable from the spine 8 so as to allow a user to

carry out above-the-floor cleaning and cleaning in places which are inaccessible by the main cleaning head 5. When the wand 9 is fixed to the spine 8, the wand forms the handle of the cleaner 1. A hand grip 9′ at the remote end of the wand 9 allows a user to manoeuvre the cleaner 1.

In the embodiment shown, the dirt- and dust- separating apparatus 3 comprises a cyclonic arrangement but this could readily be replaced by a filter, a bag or a combination of different known separation devices.

In normal upright use, the vacuum cleaner 1 is manoeuvred over the floor surface to be cleaned whilst the motor causes dirty air to be sucked into the cleaner 1 via the cleaner head 5. The dirty air is passed to the dirt- and dust-separating apparatus 3 where the dirt and dust is extracted and clean air is expelled to the atmosphere.

Dirt and dust is collected in the collecting chamber 4 of the separating apparatus 3 and needs to be emptied periodically when it is full. Thus, the separating apparatus 3 is releasable from the main chassis 2. A manually releasable catch 11 is provided on the spine 8 of the chassis 2 and is arranged to locate the separating apparatus 3, including the collection chamber 4, on the appliance. The user of the vacuum cleaner 1 releases the catch 11 and removes the separating apparatus 3 by means of a handle 12 provided on the upper portion of the separating apparatus. The user then carries the separating apparatus 3 by means of the handle 12 to a refuse bin or sack for emptying. The collection chamber 4 may be emptied by releasing it from the separating apparatus 3 and inverting it over the bin or sack. Alternatively, the collection chamber 4 may have a moveable base portion that can be released, by means of a further manually releasable catch, to allow dirt and dust to fall from the bottom of the collection chamber.

The handle 12 on the separating apparatus 3 also serves to allow the user to lift and carry the appliance as a whole, as shown in Figure. When the user does this, his hand

is close to the catch 11 for releasing the separating apparatus 3 from the chassis 2. With conventional vacuum cleaners, there has been a risk that the user may accidentally release the catch whilst carrying the appliance.

The catch 11 of the vacuum cleaner constructed according to the invention is shown in Figures 4 to 6 inclusive. Figures 4a and 4b illustrate the part of the catch 11 located on the spine 8. The catch 11 comprises a main catch member 13 having a pivot 14 on its lower portion to enable it to be pivotably connected to the spine 8. A projecting portion 15 projects away from the spine 8 and then downwardly and is located above the pivot 14. The upper portion of the main catch member 13 comprises a user-operable button 16. When the user pushes the button 16, the main catch member 13 pivots away from the user, towards the spine 8, and the projecting portion 15 of the main catch member is elevated.

Figures 5a and 5b show the complete catch 11, the remaining parts of the catch being located on the handle 12 of the separating apparatus 3. Features of the catch located behind the handle 12 are shown in broken lines in these drawings. Figure 5a shows the catch 11 in its closed position, with the separating apparatus 3 being attached to the chassis 2. The projecting portion 15 of the main catch member 13 is arranged to engage with a lip 17 on the handle 12 of the separating apparatus 3. When the user wishes to release the separating apparatus 3, he pushes against the button 16. This causes the main catch member 13 to move pivotably towards the spine 8 until the projecting portion 15 is clear of the lip 17 on the handle 12. Thus, the catch 11 is released and the separating apparatus 3 is removable as shown in Figure 5b.

When the user wishes to re-attach the separating apparatus 3, he simply pushes the separating apparatus 3 back into position on the chassis 2. As he does so, the pivotable member 13 is pushed backwards until it clears the lip 17 on the handle 12. A spring or other resilient means (not shown) then returns the main catch member 13

to its upright position, with the projecting portion 15 engaging in the lip 17 on the handle 12. Thus, the separating apparatus 3 is secured to the chassis 2.

In accordance with the invention, the catch is arranged so as to allow relative movement between the separating apparatus 3 and the chassis 2 in such a manner that, when the appliance 1 is lifted by the user by means of the handle 12, the catch 11 engages in a position that inhibits its release. To this end, the catch 11 further comprises lugs 18, 19 provided on the handle 12, one (18) of which is visible in Figures 5a, 5b, and 6a, both lugs being shown in Figures 5c and 6b. The lugs 18, 19 are located on the inner wall of the handle 12, on either side of the portion that sits against the spine 8 when the separating apparatus 3 is held onto the chassis 2. The lugs 18, 19 project upwardly, but not beyond the upper surface of the handle 12. This feature prevents the lugs being accidentally damaged in use.

The catch 11 further comprises slots 20, 21 on the spine 8 of the chassis 2, one (20) of which is shown in Figures 5a, 5b and 6a, both being visible in Figures 5c and 6b. Figures 5c and 6a are front views showing most of the features of the catch on the chassis, with only the lugs 18, 19 on the handle being shown for clarity. The slots 20, 21 in the spine are located directly above the lugs 18, 19 and the lugs are dimensioned so as to engage in the slots.

With reference to Figures 6a and 6b, the separating apparatus 3 and chassis 2 are arranged so as to permit a limited amount of relative movement between them. When the user applies a lifting force to the appliance 1 by lifting the handle 12, the separating apparatus 3 is able to move slightly upwardly with respect to the chassis 2 as the appliance is lifted off the ground. Therefore, the portion of the catch 11 located on the handle 12 of the separating apparatus 3 moves upwardly with respect to the portion of the catch 11 located on the spine 8 of the chassis 2. Thus, the lugs 18, 19 on the handle 12 move up into the slots 20, 21 provided on the chassis 2. If the user accidentally pushes the button 16, the main catch member 13 may pivot so as

to release the lip 17 from the projecting portion 15, but the catch cannot release the chassis from the separating apparatus because they are held together by the lugs 18, 19 engaged in the respective slots 20, 21.

When the user puts the appliance back down on a floor surface, the components of the catch 11 occupy their normal positions as shown in Figures 5, with the lugs 18, 19 being free of the slots 20, 21, so that the separating apparatus 3 is once again releasable from the chassis 2.

Of course, variations may be made without departing from the scope of the invention. For example, extra pairs of lugs and slots may be provided to give extra security to the catch to prevent accidental release. The mechanism of the catch may be reversed, so that slots on the handle are arranged to move upwardly when the appliance is lifted and engage downwardly-projecting lugs on the chassis.

The handle for lifting the appliance need not be the same as that provided for carrying the separating apparatus. A separate handle or hand-grip may be provided. The handle for lifting the appliance may be provided on the chassis, in which case upwardly-projecting lugs may be provided on the chassis and arranged to engage in slots on the separating apparatus. Alternatively, downwardly-projecting lugs on the separating apparatus may be arranged to engage in slots on the chassis as the chassis is lifted by the handle.

The catch of the invention may be provided to locate other components on the chassis, so that those components are not releasable whilst the appliance is being carried. The main pivotable member of the catch may be carried by the or each component, arranged to engage with a lip on the chassis.

The lugs may be arranged to locate in slots behind the user-operable button, so as to prevent the button from being depressed. This provides an indication to the user that the catch is inoperable while the appliance is lifted.

Although the invention has been described with reference to an upright vacuum cleaner, it is equally applicable to cylinder cleaners and other appliances that may be carried by a user. For example, a lawn mower may be provided with a chassis and a chamber for collecting grass clippings produced by the mower. The invention may be employed to prevent the collecting chamber from being released when the user is carrying the lawn mower. The invention may also be applied to, for example, other surface-treating appliances, such as those that apply polish or paint to a surface.

The embodiments of the invention in which an exclusive property or privilege is claimed are defined as follows:

1. A domestic appliance comprising a component carried by a chassis and a catch operable to release the component from the chassis, the catch comprising a catch portion on the component and a catch portion on the chassis, the component comprising a handle for lifting and carrying the appliance, wherein the component is arranged to move with respect to the chassis in response to the appliance being lifted by the handle, such that the catch portions move relative to one another to a position which inhibits release of the catch.

2. An appliance as claimed in claim 1, wherein the portion and the other portion of the catch each comprise one of a lug and a slot arranged to engage each other when the appliance is lifted.

3. An appliance as claimed in claim 1 or 2, further comprising another lug and slot arranged to engage each other when the appliance is lifted.

4. An appliance as claimed in claim 2 or 3, wherein the or each lug and slot are arranged to disengage from each other when the appliance is placed on a surface.

5. An appliance as claimed in any one of claims 2 to 4, wherein the or each lug is provided on the component and the slot is provided on the chassis.

6. An appliance as claimed in any one of claims 1 to 5, wherein the catch comprises a pivotable member on one of the component and the chassis arranged to releasably engage in a lip on the other of the component and the chassis.

7. An appliance as claimed in claim 6, wherein the pivotable member includes a manually operable button for releasing the catch.

8. An appliance as claimed in claim 6 or 7, wherein the pivotable member releasably engages the lip against a force of resilient means.

9. An appliance as claimed in any one of claims 1 to 8 in the form of a vacuum cleaner.

10. An appliance as claimed in claim 9, in which the component comprises separating apparatus for separating dirt and dust from an airflow.

11. An appliance as claimed in claim 10, wherein the separating apparatus further comprises a chamber for collecting the dirt and dust.

12. An appliance as claimed in claim 10 or 11, further comprising a handle for carrying the appliance when the separating apparatus is attached to the chassis and for carrying the separating apparatus when it is released from the chassis.

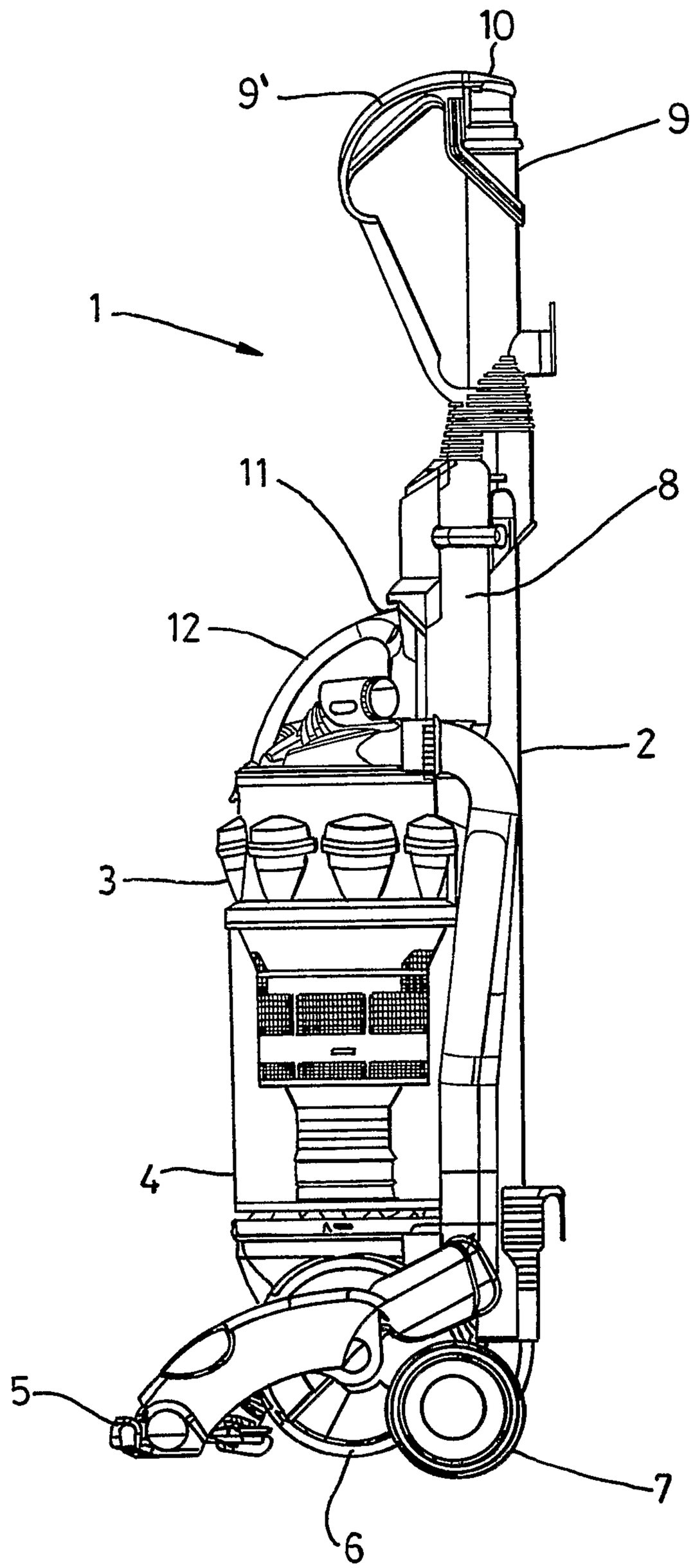

Fig. 1

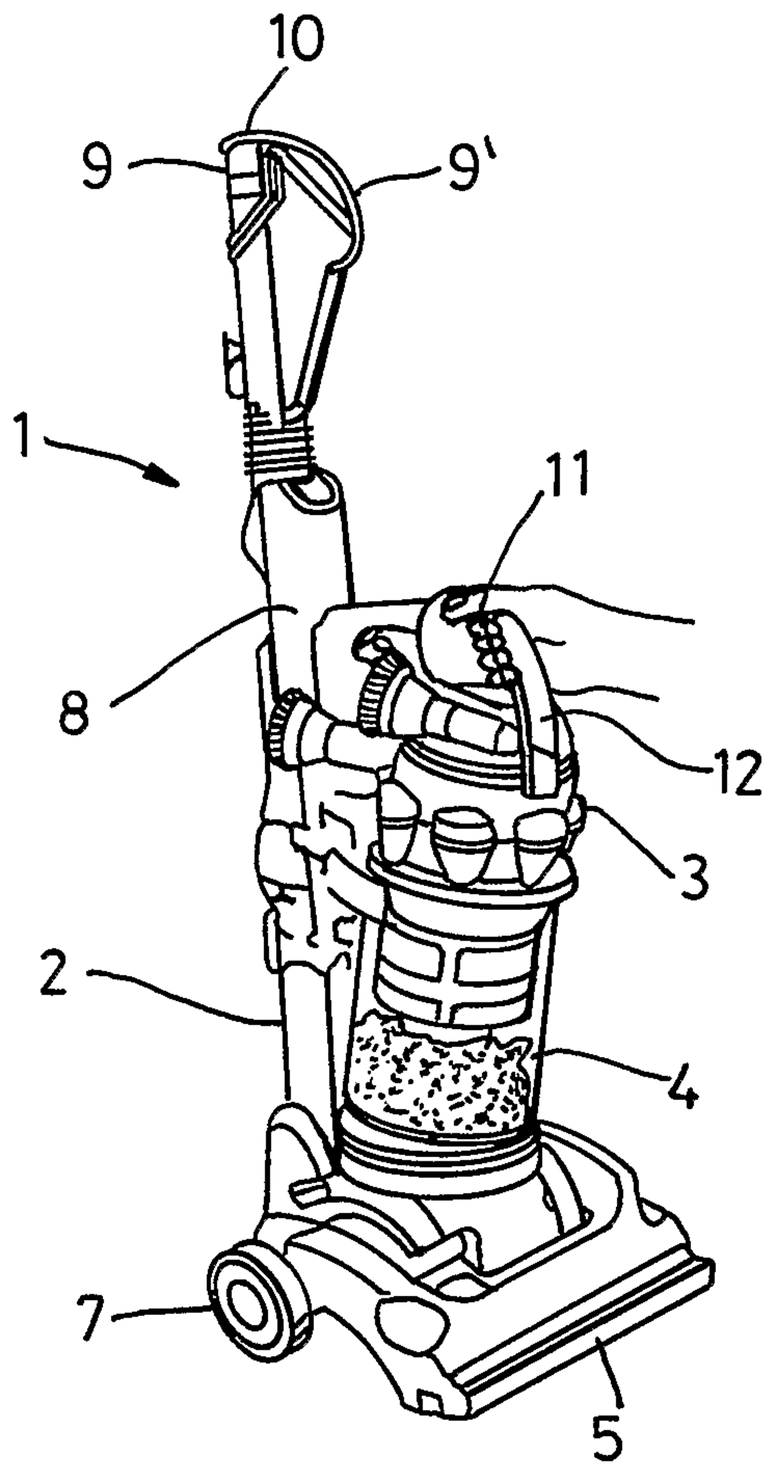

Fig. 2

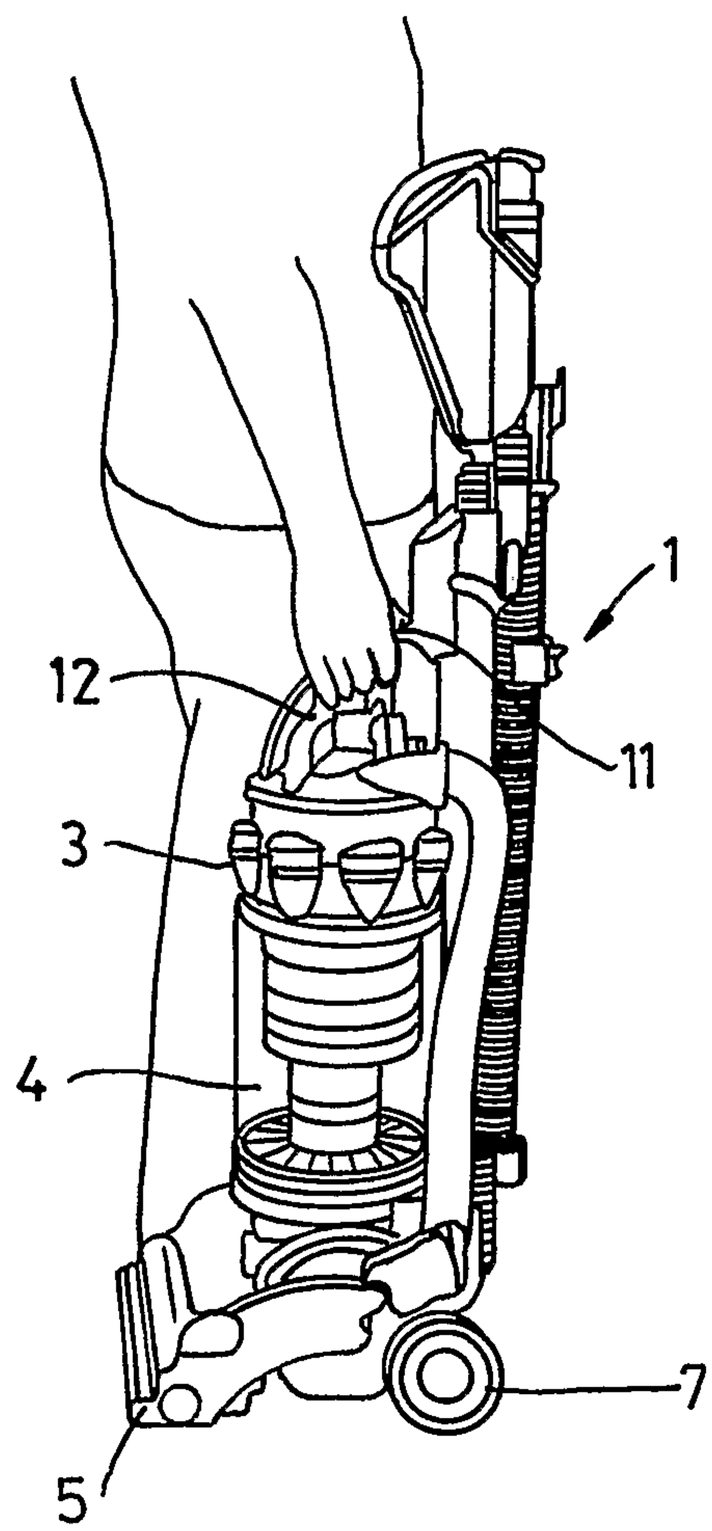

Fig. 3

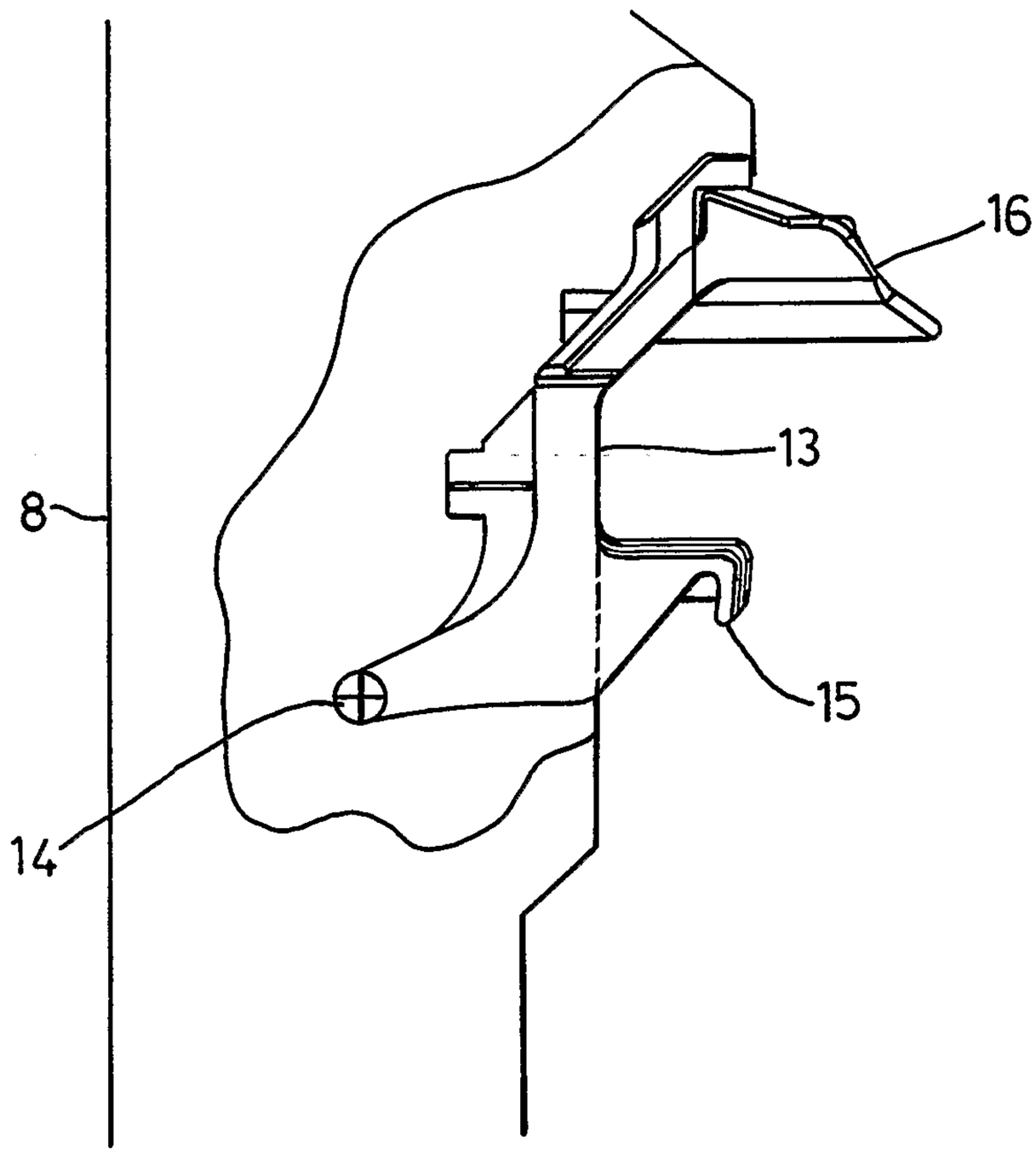

Fig. 4a

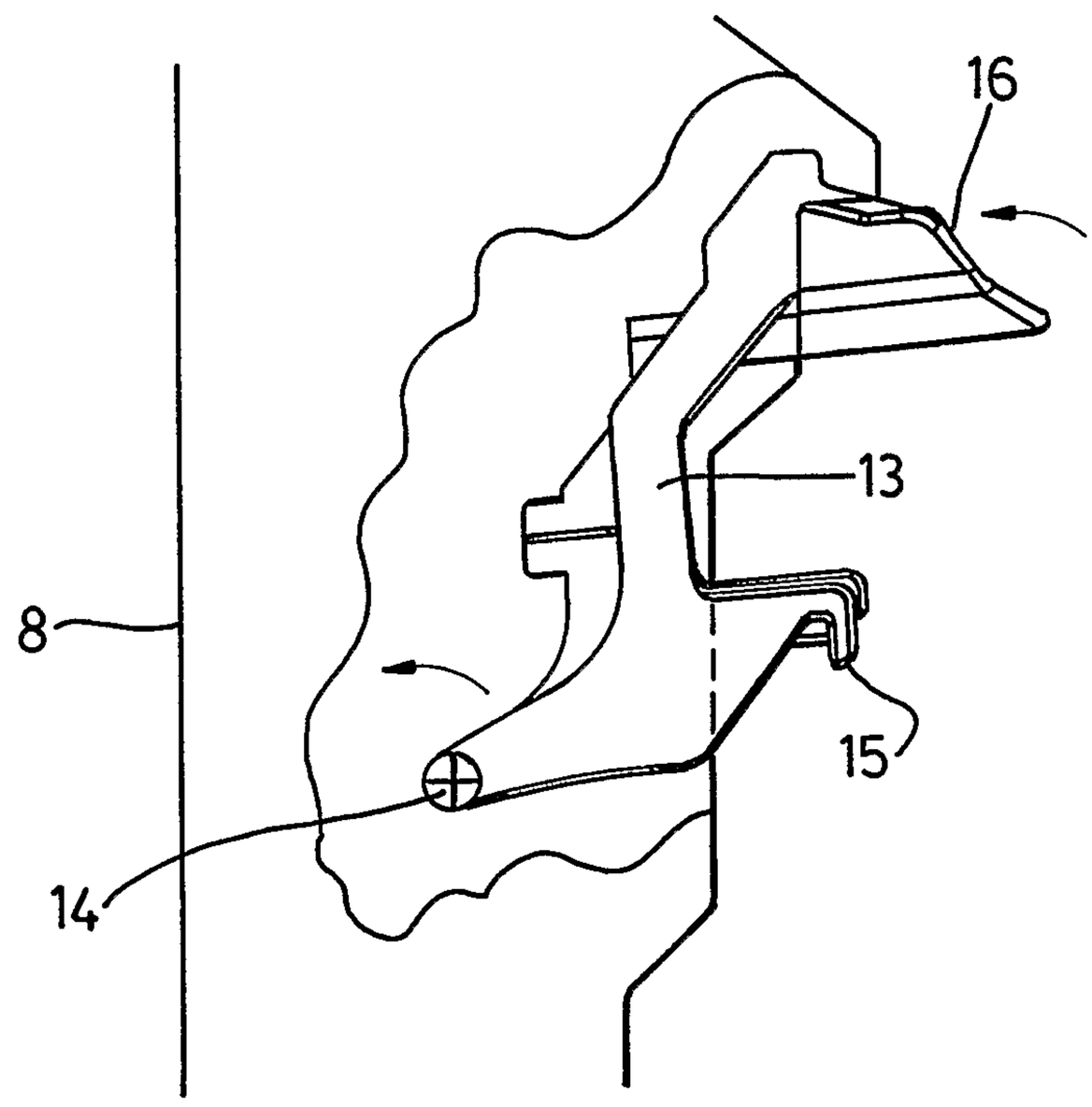

Fig. 4b

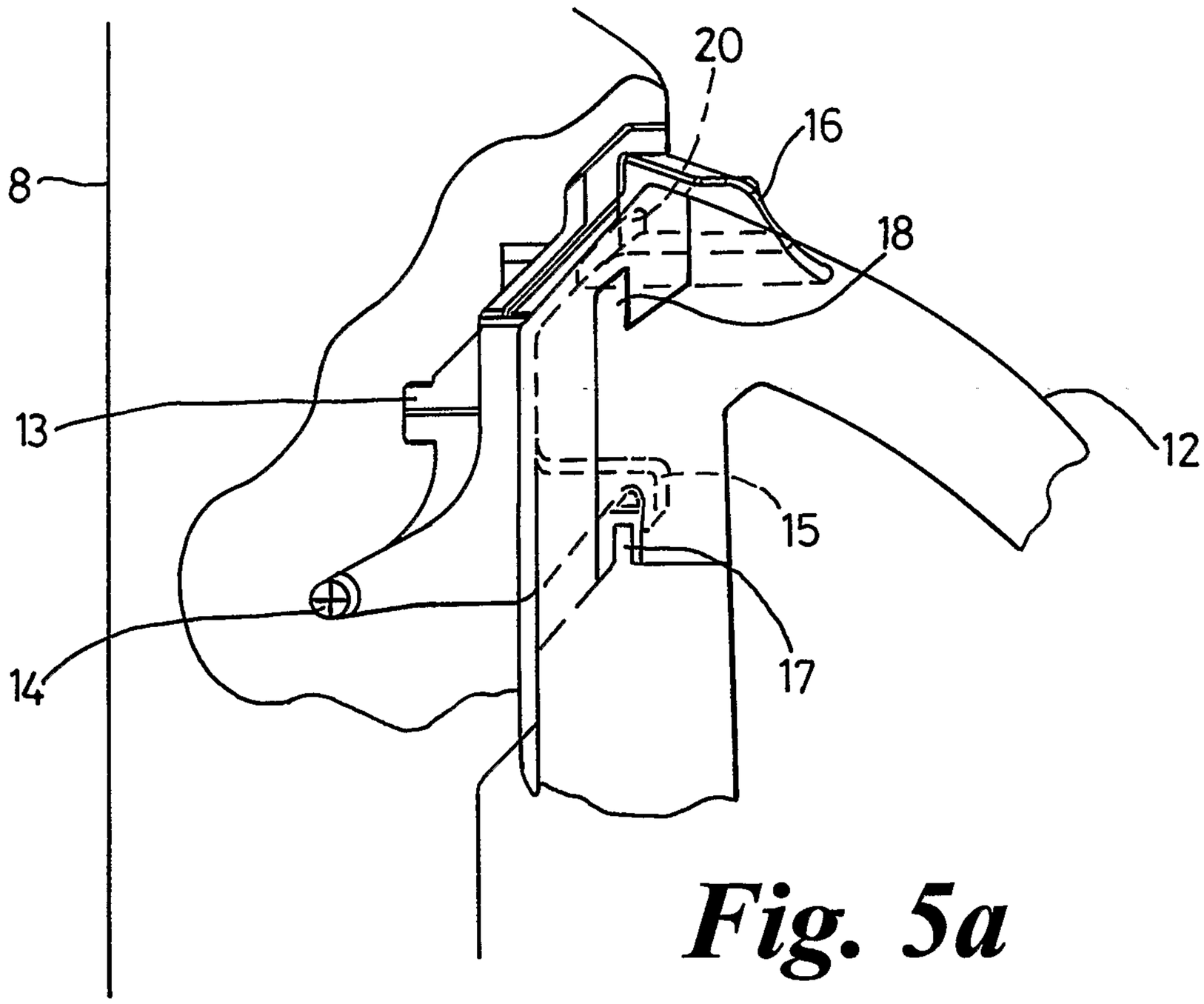

Fig. 5a

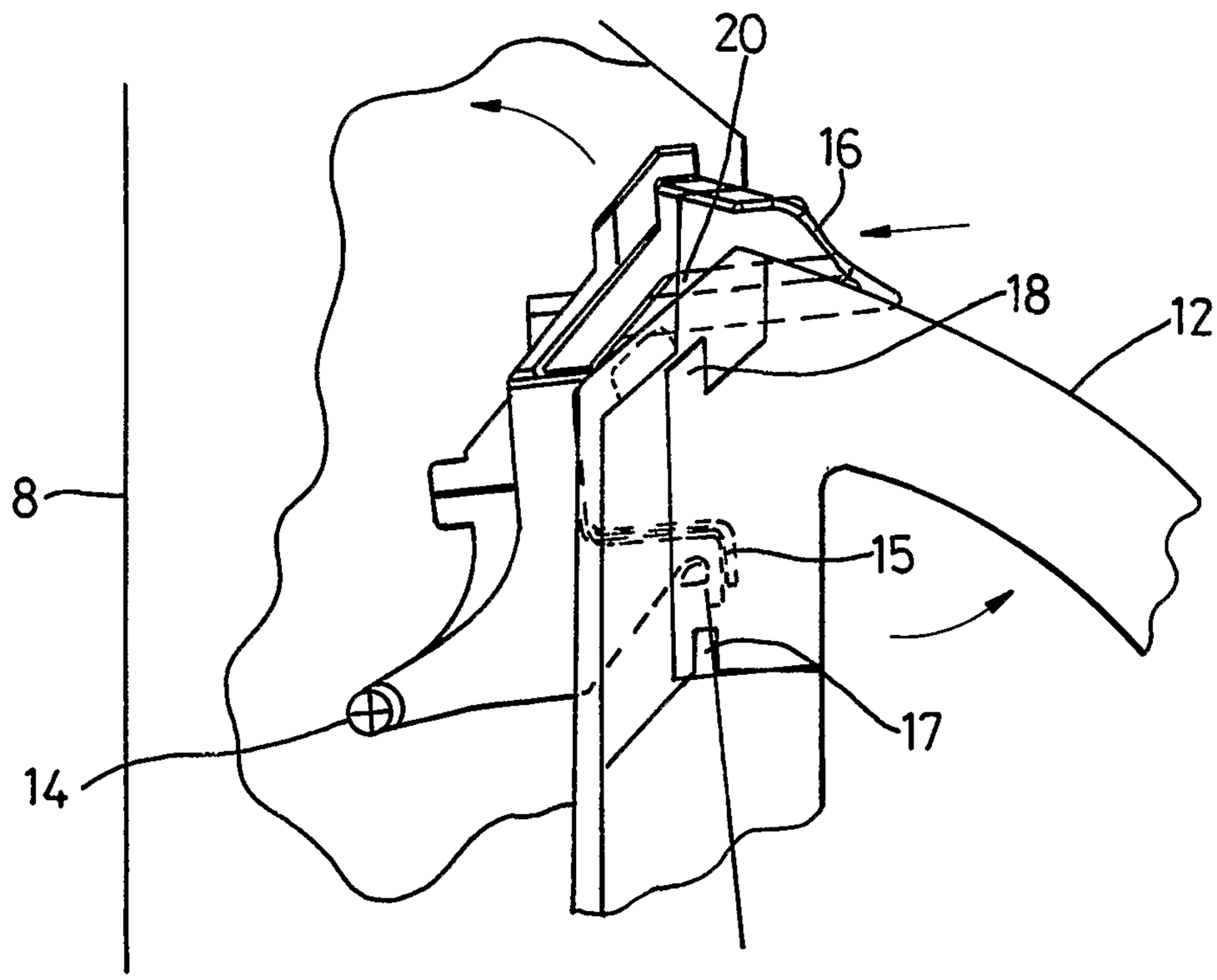

Fig. 5b

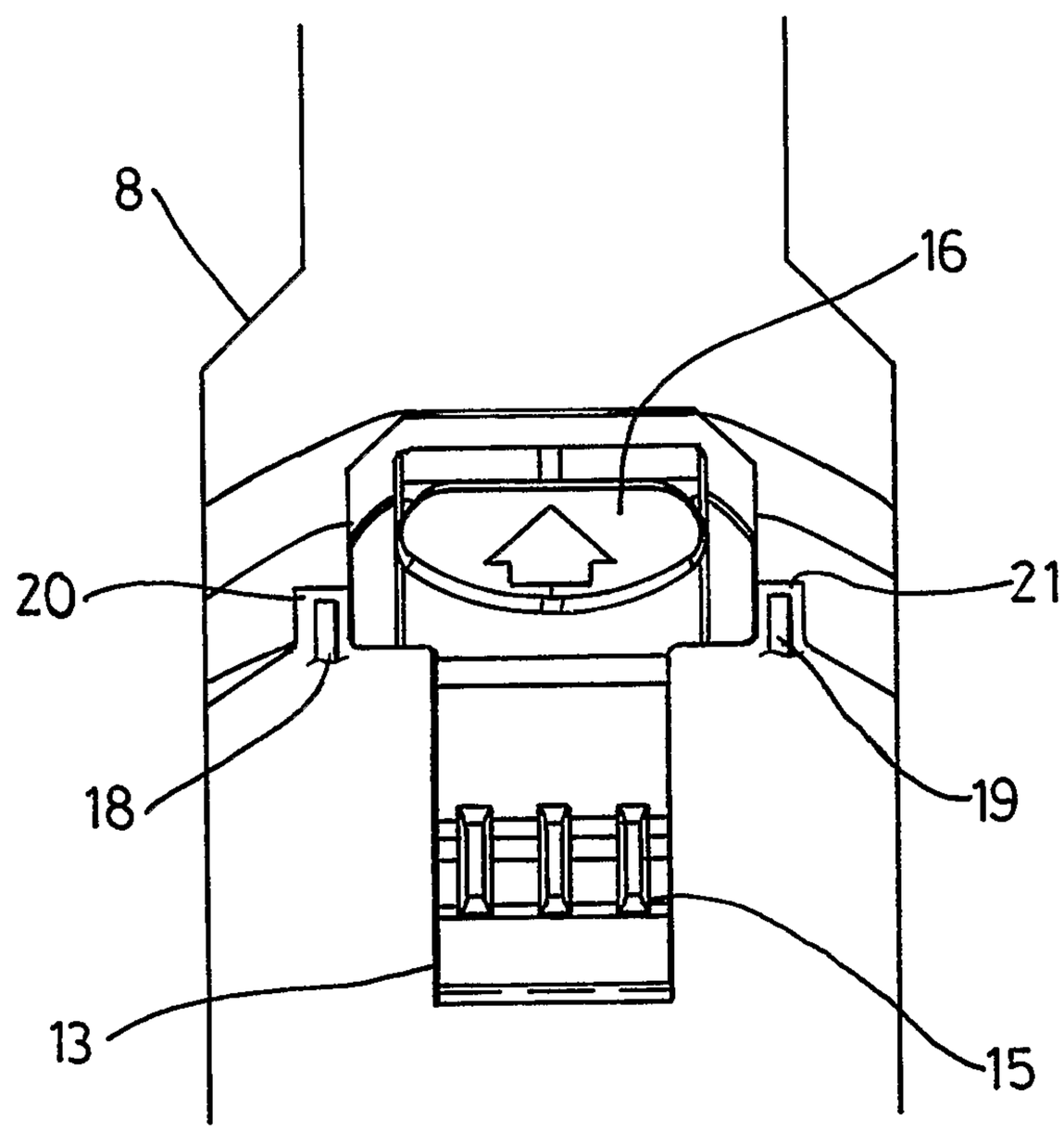

Fig. 5c

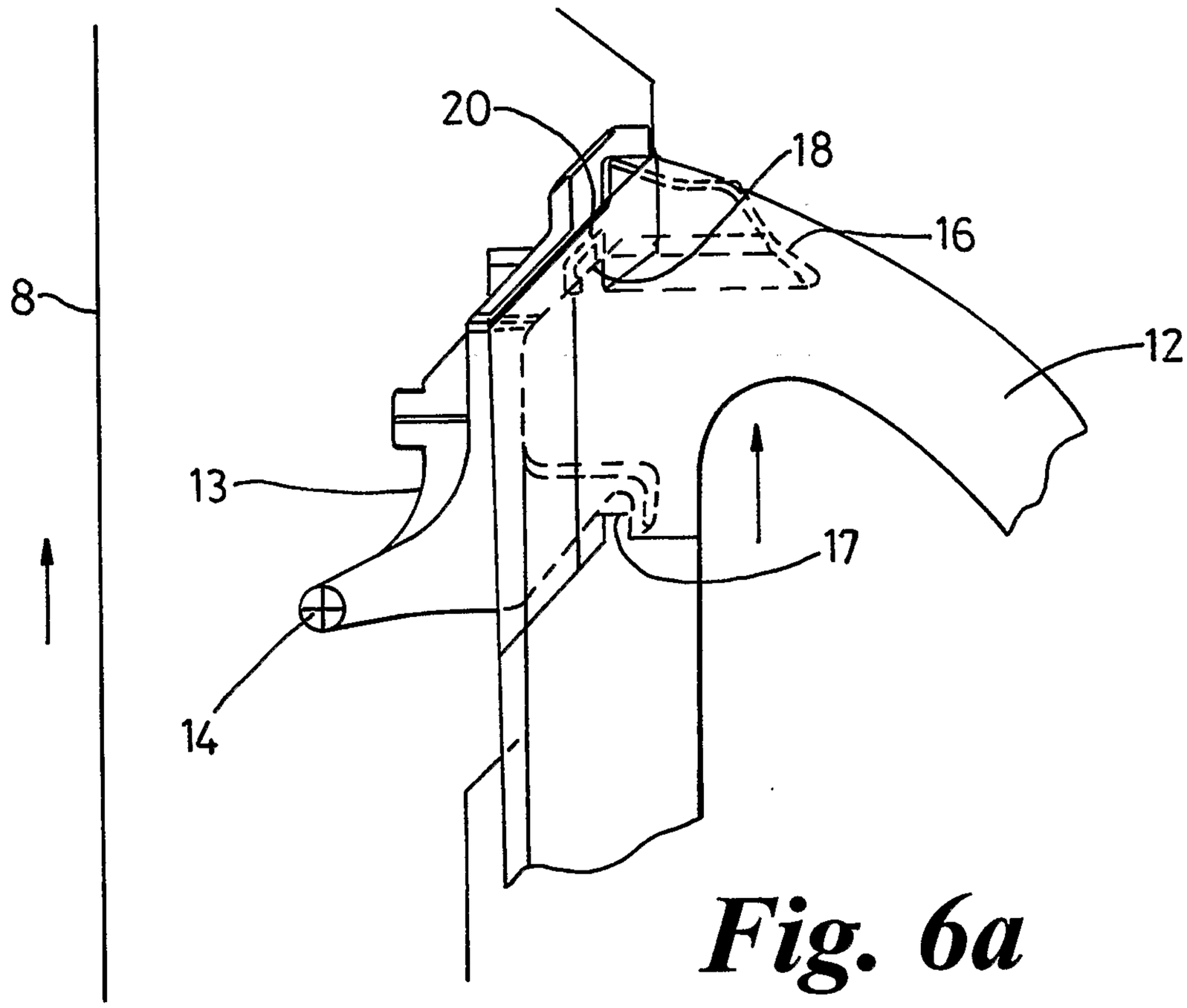

Fig. 6a

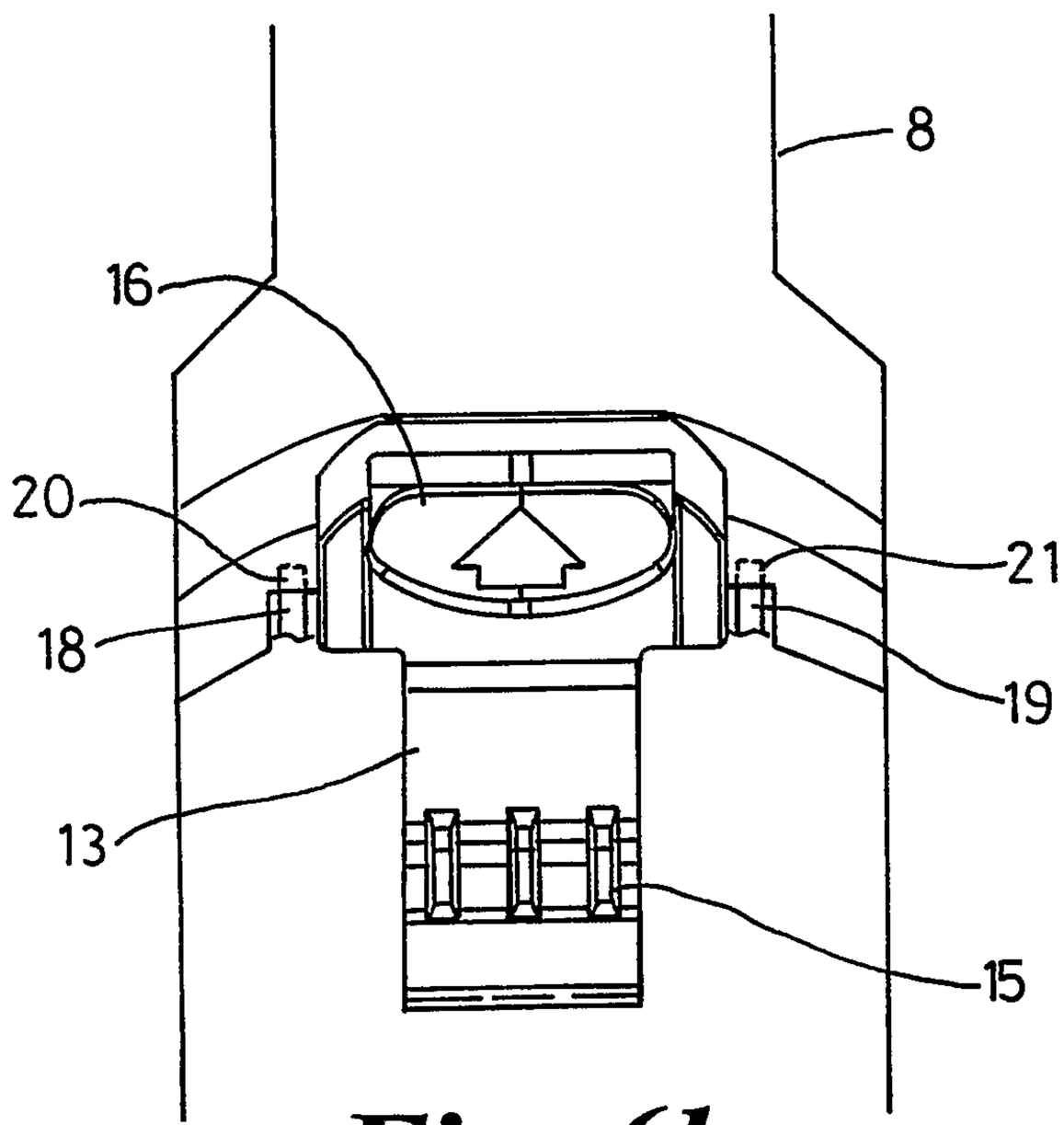

Fig. 6b

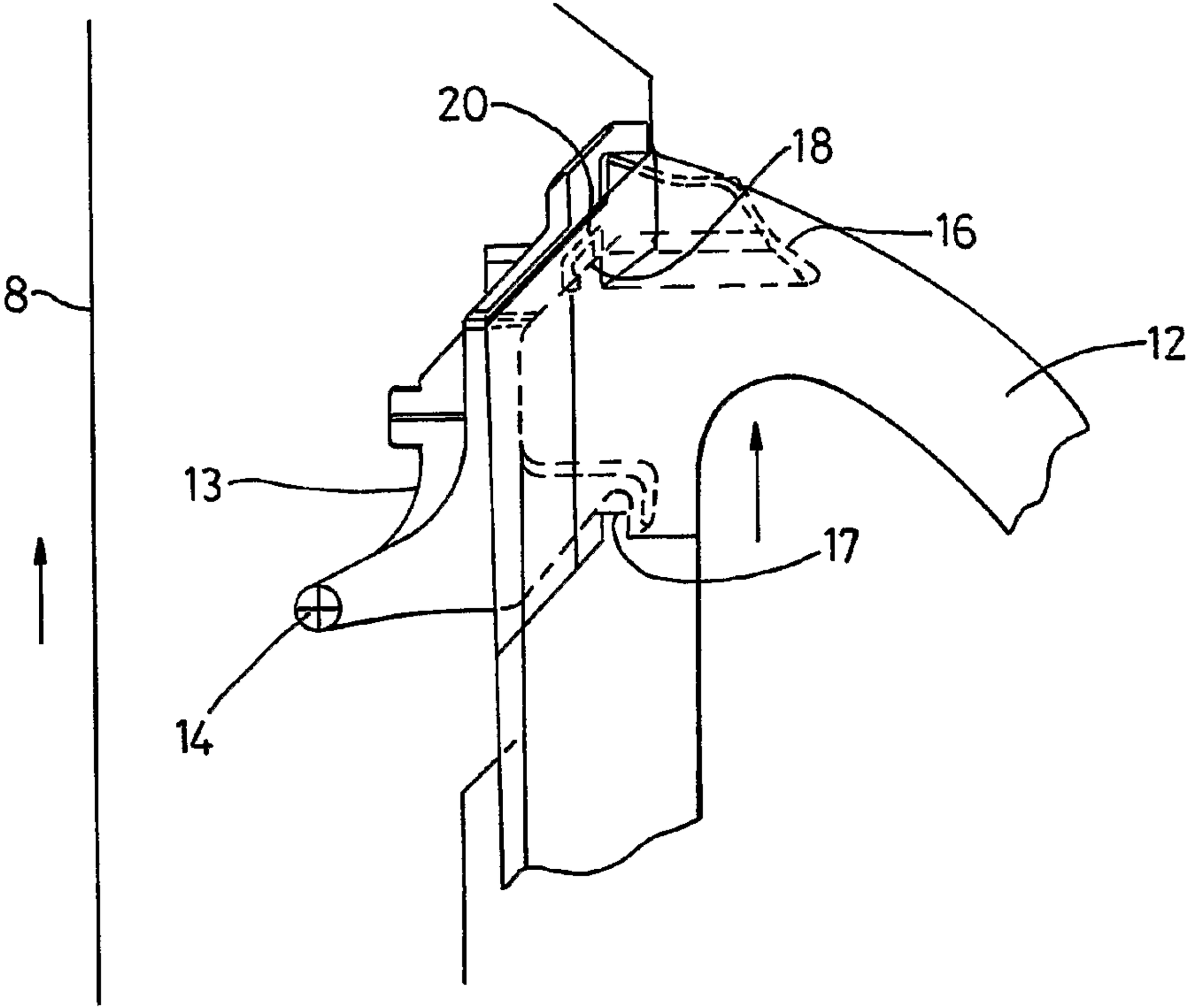
20
18
16
8
12
13
17
14