Oct. 2, 1945. B. C. ROEHRL 2,386,062

PACKAGE FOR ROLLS OF FLEXIBLE MATERIAL

Filed Sept. 9, 1943 2 Sheets-Sheet 1

Fig. 1,

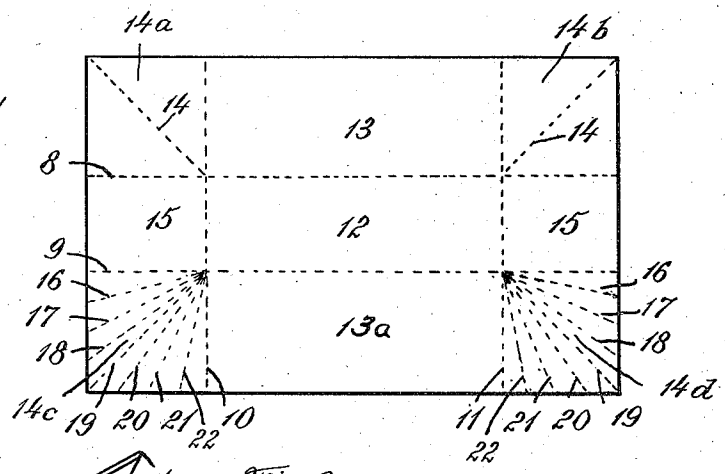

Fig. 2,

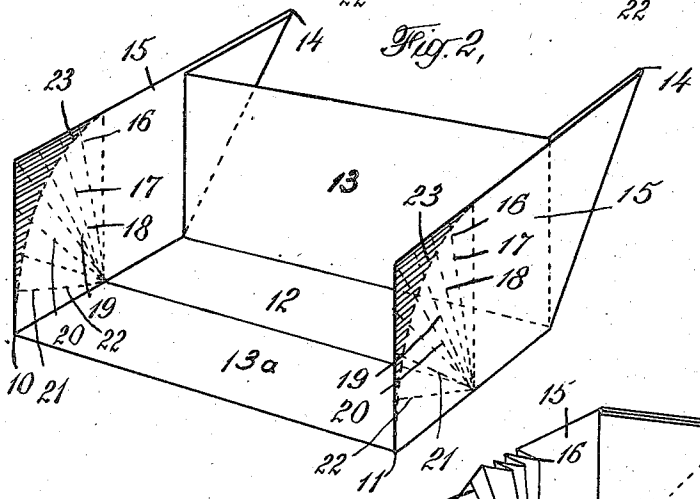

Fig. 3,

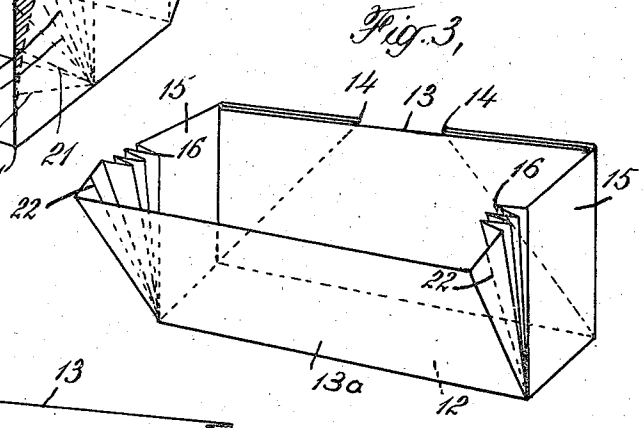

Fig. 4,

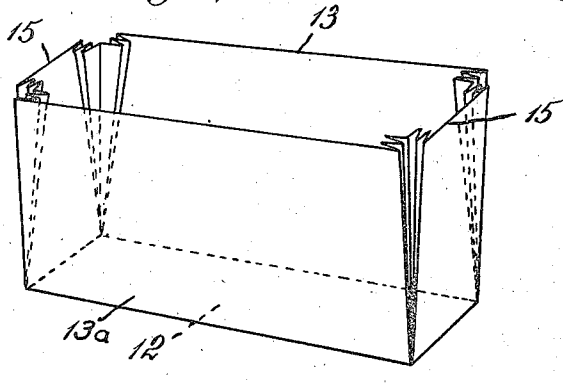

INVENTOR
Bruno C. Roehrl
BY Henry W. Coughlin
ATTORNEY

Oct. 2, 1945. B. C. ROEHRL 2,386,062

PACKAGE FOR ROLLS OF FLEXIBLE MATERIAL

Filed Sept. 9, 1943 2 Sheets-Sheet 2

Fig. 5,

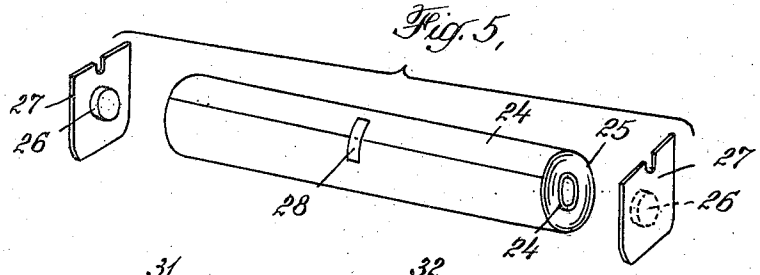

Fig. 6,

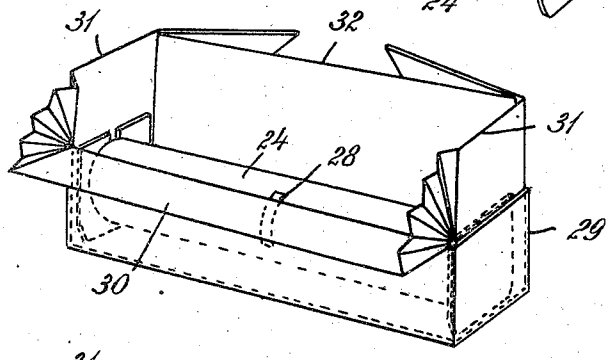

Fig. 7,

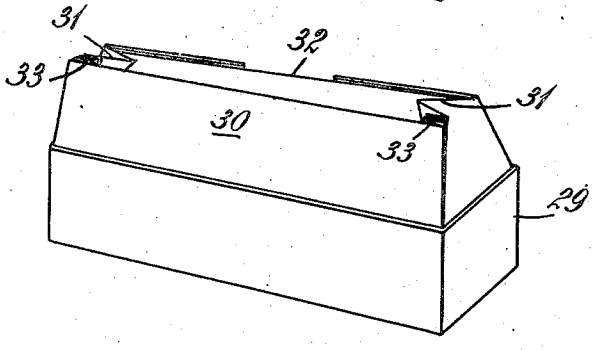

Fig. 8,

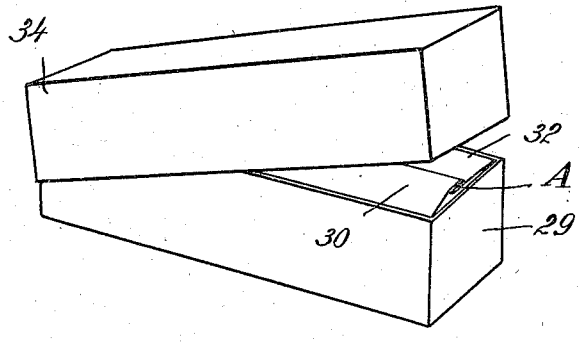

INVENTOR
Bruno C. Roehrl
BY Henry W. Coughlin
ATTORNEY

Patented Oct. 2, 1945

2,386,062

UNITED STATES PATENT OFFICE

2,386,062

PACKAGE FOR ROLLS OF FLEXIBLE MATERIAL

Bruno C. Roehrl, Binghamton, N. Y., assignor to General Aniline & Film Corporation, New York, N. Y., a corporation of Delaware

Application September 9, 1943, Serial No. 501,618

3 Claims. (Cl. 229—14)

The present invention relates to improvements in receptacles, relates particularly to the packaging of rolls of flexible materials, and relates especially to a wrapper for rolls of light sensitive materials.

It is the usual practice in the packaging of rolls of light sensitive material to wrap the roll with a sheet of flexible material such as paper, tin foil, etc. and place the wrapped roll into a container. Although such a wrapper and container is sufficient to protect the light sensitive material from premature exposure, it suffers the shortcoming that once the wrapper is removed from the roll, the light sensitive material must be immediately utilized as a whole, and if only a portion of the light sensitive material is used, the replacement of the wrapper over the remainder of the material is an awkward and time consuming procedure. Similarly, such wrappers are not adapted for use where only small portions of the material are to be taken out at a time since once the wrapper is unfolded and only a portion of the material used, it is very difficult to rewrap the material. The crease folds of the wrapper are distorted and when an attempt is made to fold the wrapper along its original fold or crease, considerable time is consumed, and in a majority of cases the wrapper becomes bulky due to its distorted shape and cannot be readily placed into the original container. Likewise, in the commercial packing or wrapping of light sensitive materials of one hundred feet in length or more and wider than three feet, considerable difficulty is encountered. It is obvious that the weight of these rolls is substantial, and to take them from the box, unwrap and rewrap them in a common wrapping paper is a difficult operation, especially when this must be performed in a photographic darkroom. Furthermore, to handle such larger spools when wrapped in a common wrapping paper requires a large table space, which is not always available in a darkroom, and this handling method increases the danger of soiling the sensitized material as well as the wrapping paper, which in repacking will come in contact with the sensitized material. Also in unrolling the sensitized material it is necessary to handle the material unduly often, thereby increasing the possibility of finger marks and kinks which, of course, are very harmful since such damage may render the material entirely useless.

In order to overcome the above shortcomings I have devised a package of a simple and economical construction that can be conveniently used to package in bulk, rolls of light sensitive or other materials without the necessity of completely removing the wrapper from the roll when taking out small lengths of the material for use.

The main object of the present invention is to provide a container for packaging of rolls of light sensitive materials, whereby parts of the materials may be taken from the roll without removing the roll from the container.

Another object of the invention is to provide a wrapping pouch folded from at least one substantially rectangular or a square piece of flexible material to receive the material to be packed, including bearing blocks or journals, and adapted for insertion into a rigid container, and permitting quick access to the material without removal of the roll from the wrapping pouch.

Another object of this invention is to provide a lighttight and/or dustproof and/or moisture resistant wrapping pouch and box, facilitating easier access to the wrapped roll, flat or bulk material by removing the cover of said box only, and unfolding the upper portion of the said pouch.

Still another object is to provide a neat storage box for raw materials requiring a minimum of work space for unpacking, removing and repacking of some of said material.

A more specific object is to provide a wrapping pouch having at least one pair of corners folded in bellows style so that they may be opened and folded outwardly over the edge of a solid box without disturbing substantially the bellows folds or other sections of the wrapping pouch.

Other objects of the invention will become apparent as the detailed description thereof proceeds.

The preferred embodiments of the invention are shown in the accompanying drawings and will be herein described in detail, but it is to be understood that the invention is not restricted to the precise details shown as equivalent constructions are contemplated and are to be included within the scope of the appended claims.

Referring now to the drawings:

Figure 1 shows a sheet of flexible material from which the wrapper is formed, the ultimate folds being indicated by the dotted crease lines.

Figure 2 is a slightly progressed perspective view showing the method of folding the wrapper along the dotted crease lines, and where the bellowslike folds are to be made.

Figure 3 is a perspective view showing the progressive folding of two corners of the wrapper in bellows style.

Figure 4 is a modification of the wrapping

pouch showing how the corner panels 14a, 14b, 14c and 14d of Figure 1 may be folded so that one-half of each panel is folded beneath each adjacent side wall.

Figure 5 is a perspective view showing a roll of flexible material wound on a hollow core with two end pieces or bearing blocks slightly removed from the core.

Figure 6 is a perspective view showing the unit of Figure 5 placed into the folded unit of Figure 3, both of which are placed inside of a rectangular box.

Figure 7 is a perspective view showing how the protruding upright parts and two small end walls of the wrapper are folded inwardly.

Figure 8 is a perspective view of the whole unit, the box half opened and the wrapper completely folded.

The sheet of flexible material as shown in Figure 1 is initially folded and creased along the lines 9, 9, 10 and 11. The area 12 being less than the area of sides 13 and 13a, and the four corner panels 14a to d may originally be squares or 90° sectors of a circle. After the initial folding and creasing has been made, the side portions along lines 10 and 11 are turned upward. At this point, a crease is made along the under portion of lines 14, and the rear wall 13 and side walls 15 brought to close proximity so as to be at right angles to each other as shown in Figure 2. The next step is to make folds or creases along the lines 16 through 21 so as to resemble pleats or bellows folds. The pleated portions are then straightened out and the projecting shaded corner areas are trimmed along lines 23. The corner areas may be trimmed either before or after the pleats or bellows folds are made. The final step is to fold the pleats into bellows folds as shown in Figure 3. It is obvious that all corners of panels 14a to d can be folded in bellows like manner so that both the front wall 13a and the rear wall 13, open up outwardly without disturbing the side panels, or substantially one-half of each corner panel could be folded beneath the adjacent side panel as shown in Figure 4 so that all four side walls or any one side wall can be folded outwardly and over the edge of a solid box without substantially disturbing the remaining side walls.

The wrapping pouch as now constructed is placed into the lower box or carton and is ready to receive a roll of flexible material 24, such as paper or photographic film wound on a core 25 hollow through its entire length or at the ends only as shown in Figure 5. The core 25 fits into round raised portions or cylindrical blocks 26 which are in the approximate center of flat sheets 27 constructed from fibrous material. The film or similar material is prevented from unrolling by means of a tape or sticker 28.

Figure 6 illustrates the completed roll and bearing blocks of Figure 5 inserted into the wrapping pouch of Figure 3 which in turn is placed into a rectangular box 29. The completed roll and bearing blocks are placed into the wrapping pouch in such a manner that the core may be revolved for the purpose of removing some of the paper or film. The particular advantage of this construction is that the side flap 30 is folded in bellows fashion so as to permit this flap to be folded outwardly 90° or more, and even when the wrapping pouch is placed in a box having substantially rigid side walls, the protruding part of flap 30 may still be folded outwardly without destroying or otherwise damaging the remaining side walls 31 and rear wall 32. The flexible material 24 may be readily removed from the roll 25 either by pulling the edge of the material 24 upwardly or by pulling it horizontally along the inner sides of flap 30.

From Figure 7 it will be observed that when the wrapping pouch is placed into the rigid container 29, the four side flaps 30, 31 and 32, and bellows folds 33 are of substantially equal height so that the four flaps and bellows folds can be easily folded by their edges into a roll and flattened so as to be adjacent to the outer side of flap 32 as shown by A in Figure 8.

Figure 8 illustrates the completed wrapper containing the roll of flexible material inserted into a container 29 and a telescoping top portion 34 in which form the container is shipped from the point of packing to the final user. The container thus provided can be readily opened by the user, and it can be readily re-closed after a portion of the contents have been removed.

While I have illustrated my invention with the use of an initially flat sheet of wrapper material, it will be obvious to those skilled in the art that the initial wrapper as shown in Figure 1 can be preformed by printing out the dotted lines or by slightly creasing, or in case where a box need not be light tight, perforating the surface of the sheet with a suitable instrument in order to facilitate the folding operations.

It will also be apparent to those skilled in the art that my package can be used for a variety of materials, such as for example, textiles, paper, Cellophane, and many other fibrous or non-fibrous materials since the package is well adapted to successfully protect such materials from dust, sunlight in the case of dyed textiles, and other deleterious influences. When packaging photographic film or paper, it is desirable that the wrapping pouch be constructed of black or dark colored opaque material in order to more fully protect the light sensitive material from exposure in the event there be flaws, cracks or openings in the container and closure therefor.

By the expression "sheet material" as used in the specification and appended claims I mean to include ordinary wrapping paper, kraft paper and paper-like materials, sized textiles such as muslin, cotton, Cellophane, tinfoil, as well as any other sheet material derived from wood pulp or textile fibres, either of animal or vegetable source and of plastic materials or those derived from synthetic or natural resins.

It is to be understood that the invention is not intended to be restricted to any particular illustration given herein, or to any particular application, or to any specific manner of use or to any various details thereof herein described, as the same may be modified in various particulars and applied in many varied relations without departing from the spirit and scope of the claimed invention, the practical embodiments herein described merely showing some of the features entering into the application of the invention.

What I claim is:

1. A container of the type described having in combination a wrapper and a supporting box and cover within which the wrapper is retained, the height and width of the box being approximately equal, said wrapper being comprised of a single sheet of material folded so as to form a bottom, side and end members, the height of the side and end members being approximately twice the height of the corresponding side and end members of the box whereby the upper portion of the wrapper may be folded to form a substantially light-tight closure, and a series of bellows folds con-

necting one of the side members with the adjacent end members whereby, when the wrapper is opened the said side member may be folded forwardly and downwardly to facilitate removal of the packaged material.

2. A container of the type described having in combination a wrapper and a supporting box and cover within which the wrapper is retained, the height and width of the box being approximately equal, said wrapper being comprised of a single sheet of material folded so as to form a bottom, side and end members, the height of the side and end members being approximately twice the height of the corresponding side and end members of the box whereby the upper portion of the wrapper may be folded to form a substantially light-tight closure, single triangular folds connecting one side member and the adjacent end members, and a series of bellows folds connecting one of the side members with the adjacent end members whereby, when the wrapper is opened, the said side member may be folded forwardly and downwardly to facilitate removal of the packaged material.

3. A container of the type described having in combination a wrapper and a supporting box and cover within which the wrapper is retained, the height and width of the box being approximately equal, said wrapper being comprised of a single sheet of material folded so as to form a bottom, side and end members, the height of the side and end members being approximately twice the height of the corresponding side and end members of the box whereby the upper portion of the wrapper may be folded to form a substantially light-tight closure, and a series of bellows folds connecting each of the side members with the adjacent end members whereby, when the wrapper is opened, either side member may be folded forwardly and downwardly to facilitate removal of the packaged material.

BRUNO C. ROEHRL.