US00D969673S

(12) United States Design Patent

Brickstad

(10) Patent No.: US D969,673 S

(45) Date of Patent: ** Nov. 15, 2022

(54) **BIKE**

(71) Applicant: **Vassla AB**, Stockholm (SE)

(72) Inventor: **Per Brickstad**, Varmdo (SE)

(73) Assignee: **Vassla AB**, Stockholm (SE)

(**) Term: **15 Years**

(21) Appl. No.: **29/741,576**

(22) Filed: **Jul. 14, 2020**

(30) **Foreign Application Priority Data**

Jan. 23, 2020 (EM) 007548789-0001

(51) **LOC (13) Cl.** **12-11**

(52) **U.S. Cl.**
USPC **D12/111**

(58) **Field of Classification Search**
USPC D12/111, 117–120; D21/419, 432
CPC ... B62K 3/02; B62K 3/06; B62K 3/08; B62K 9/00; B62K 15/00; B62K 15/006; B62K 15/008; B62K 17/00
See application file for complete search history.

(56) **References Cited**

U.S. PATENT DOCUMENTS

D900,681 S * 11/2020 Liu D12/111
D914,548 S * 3/2021 Chen D12/111
D914,549 S * 3/2021 Chen D12/111
D924,102 S * 7/2021 Avery D12/111
D929,906 S * 9/2021 Teal D12/111
D931,146 S * 9/2021 Huang D12/111
D934,120 S * 10/2021 Zhu D12/111
D934,126 S * 10/2021 Avery D12/111
D935,949 S * 11/2021 De Roeck D12/111
D935,950 S * 11/2021 Hu D12/111
2021/0129942 A1* 5/2021 Chen B62K 19/34

* cited by examiner

Primary Examiner — Darlington Ly
Assistant Examiner — Nasim Abdulaziz Ali
(74) *Attorney, Agent, or Firm* — McDonald Hopkins LLC

(57) **CLAIM**

The ornamental design for a bike, as shown and described.

DESCRIPTION

FIG. **1** is a rear perspective view of a bike showing my new design;
FIG. **2** is a front perspective view thereof;
FIG. **3** is a rear elevation view thereof;
FIG. **4** is bottom plan view thereof;
FIG. **5** is a front elevation view thereof;
FIG. **6** is a side elevation view thereof, and,
FIG. **7** is a top plan view thereof.
The broken lines in the figures are included for the purpose of illustrating portions of a bike and form no part of the claimed design.

1 Claim, 7 Drawing Sheets

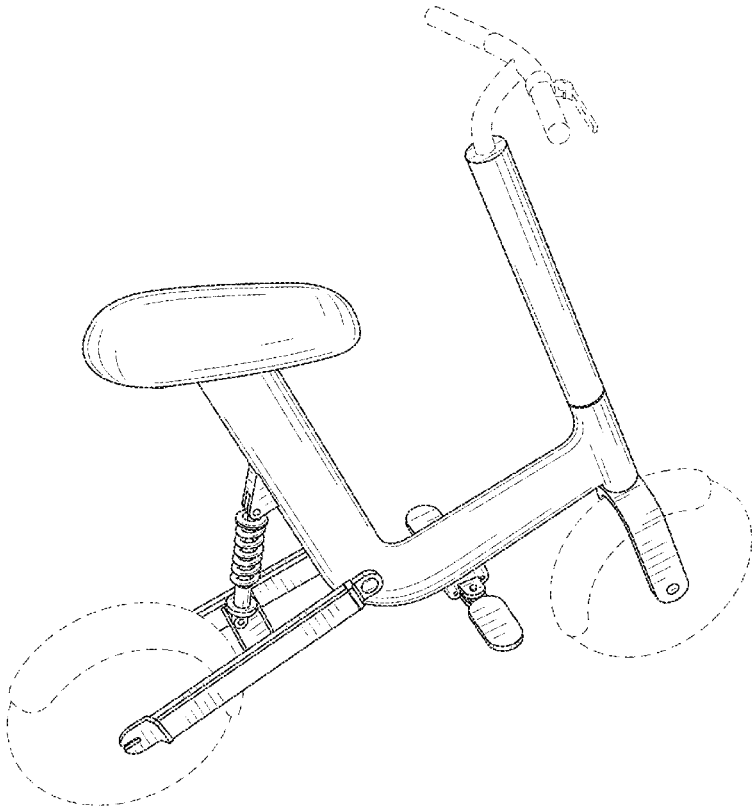

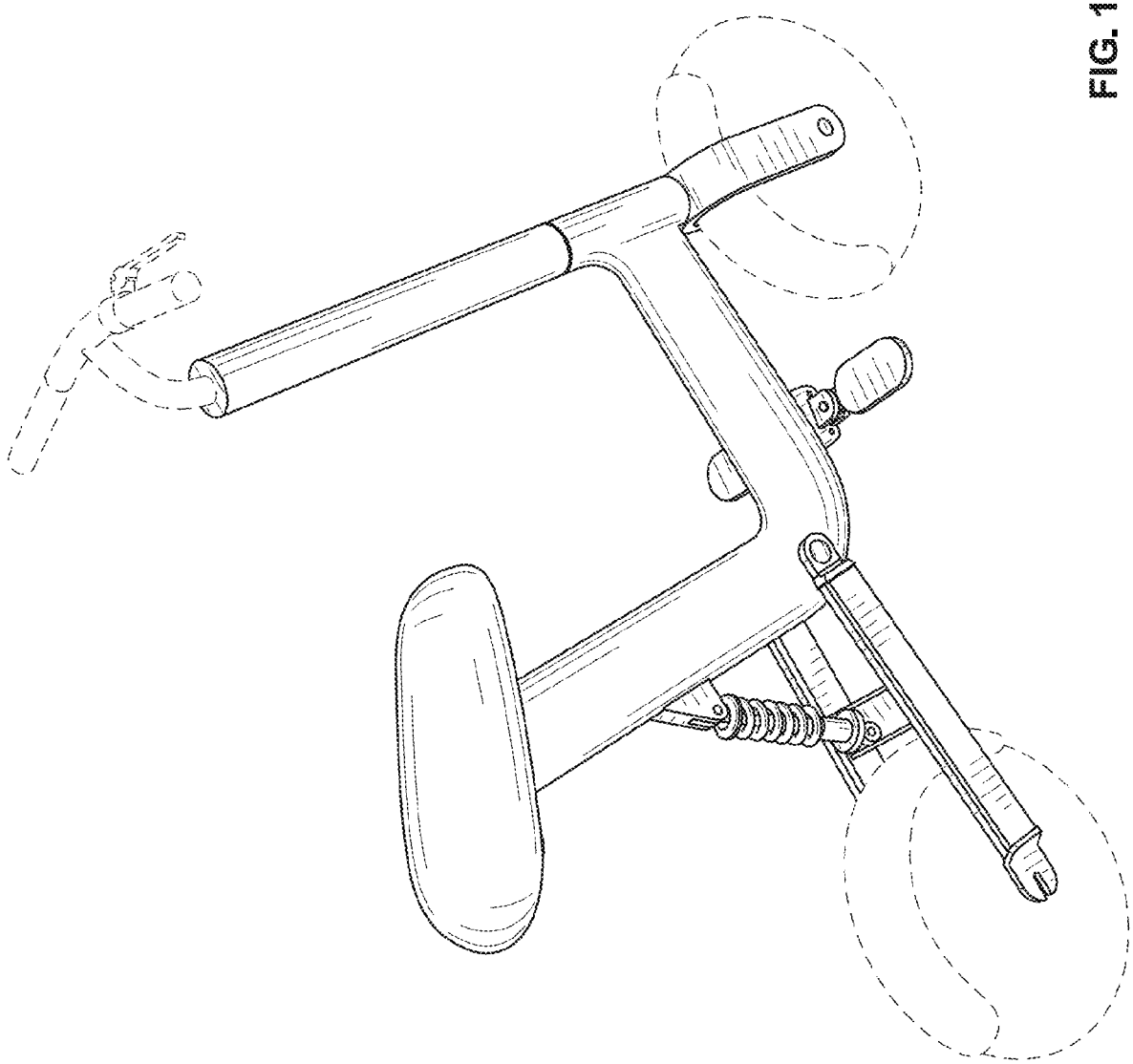

FIG. 1

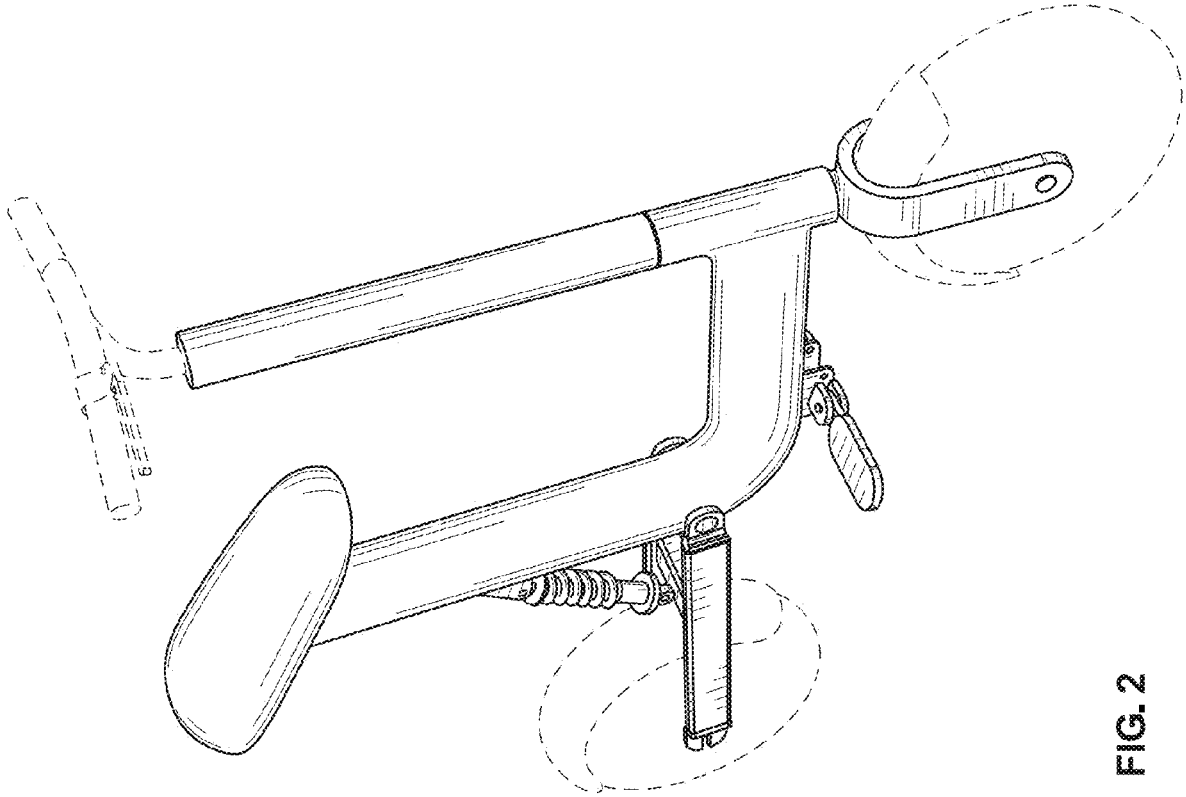

FIG. 2

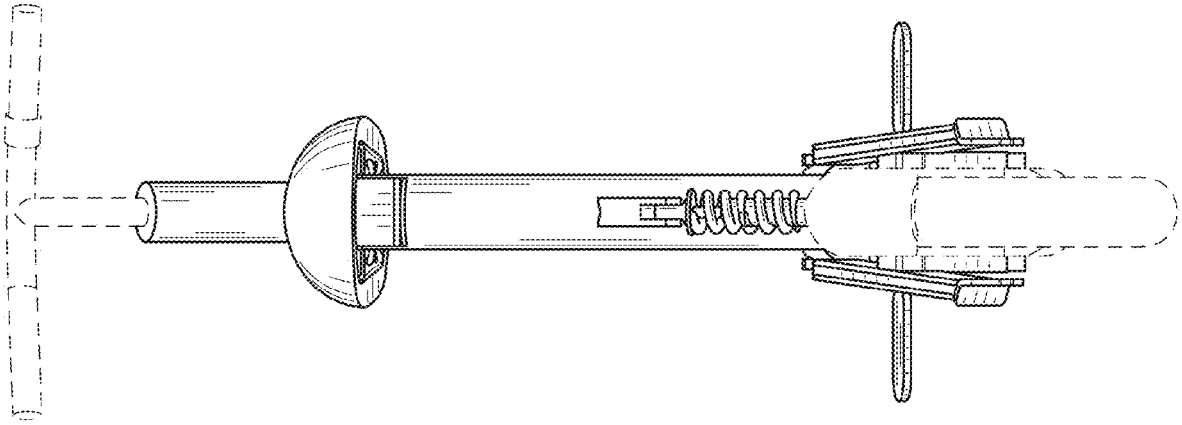

FIG. 3

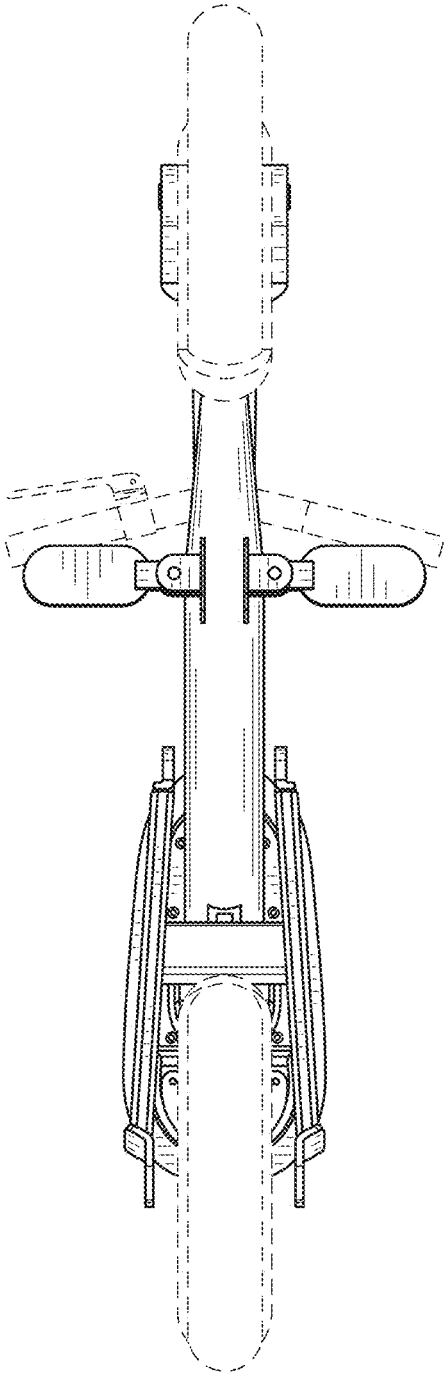

FIG. 4

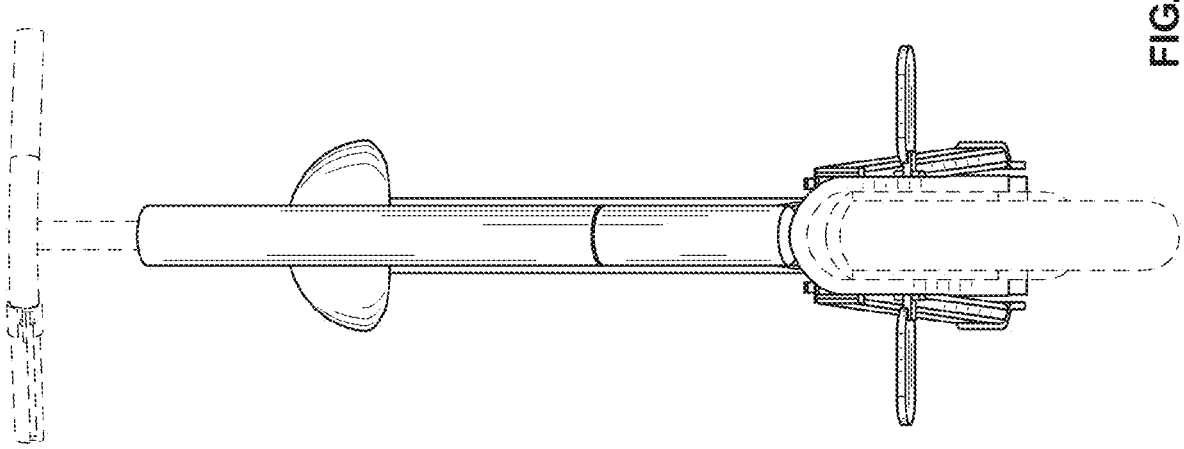

FIG. 5

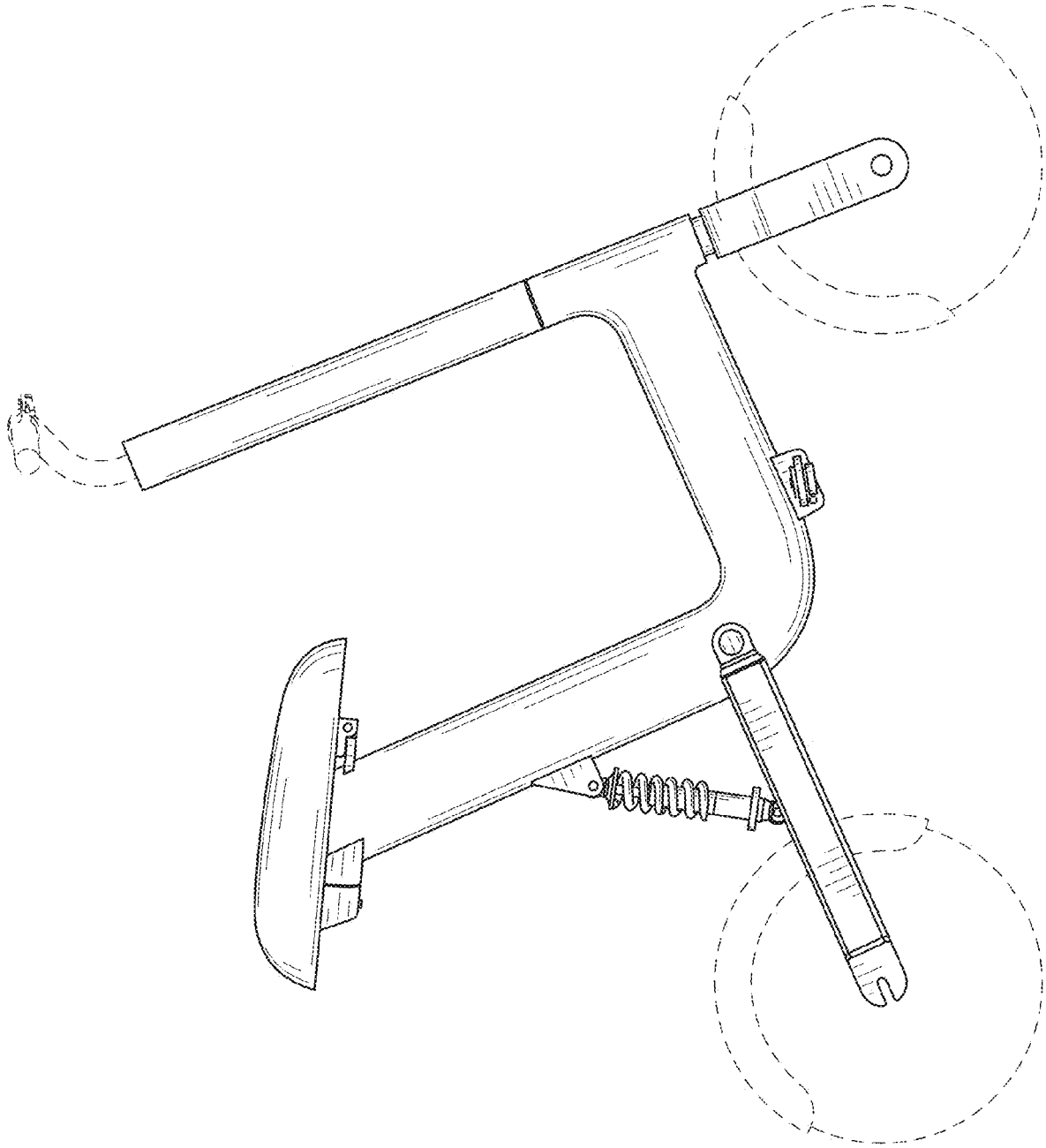

FIG. 6

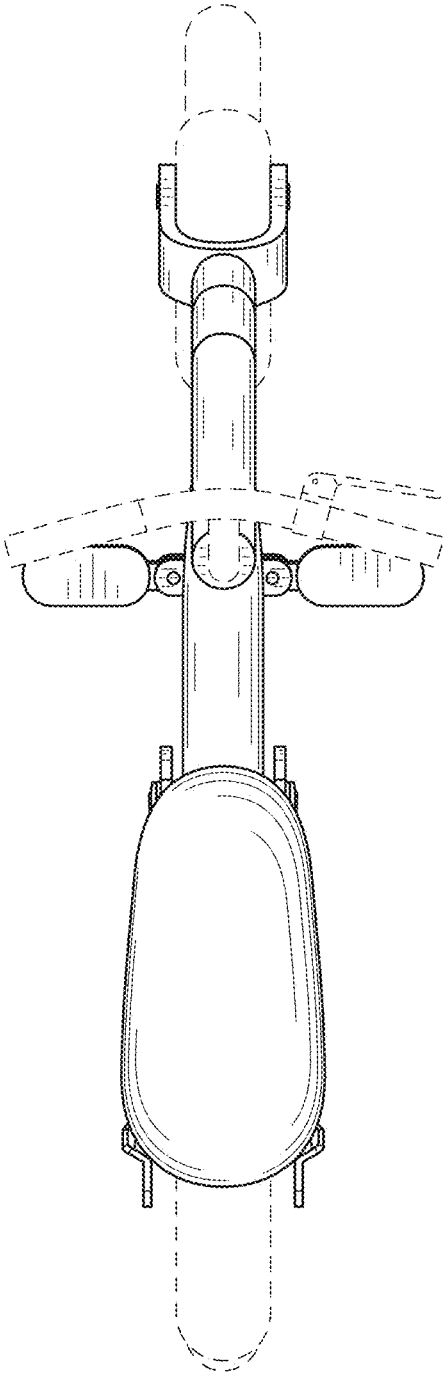

FIG. 7