E. JANIK.

APPARATUS FOR CHARGING THE COIN CONTAINERS OF PAYING MACHINES.

APPLICATION FILED OCT. 26, 1910.

1,068,661. Patented July 29, 1913.

FIG. 1.

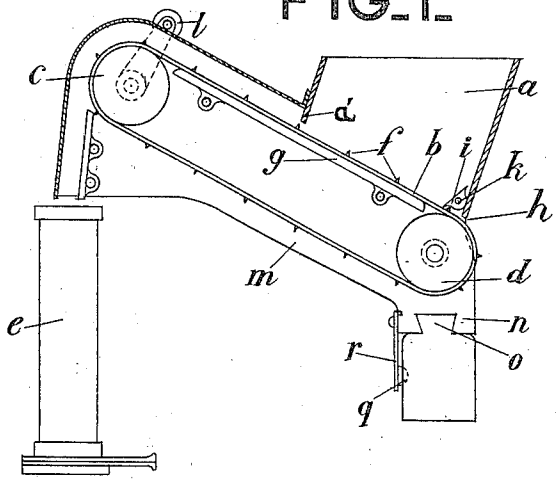

FIG. 2.

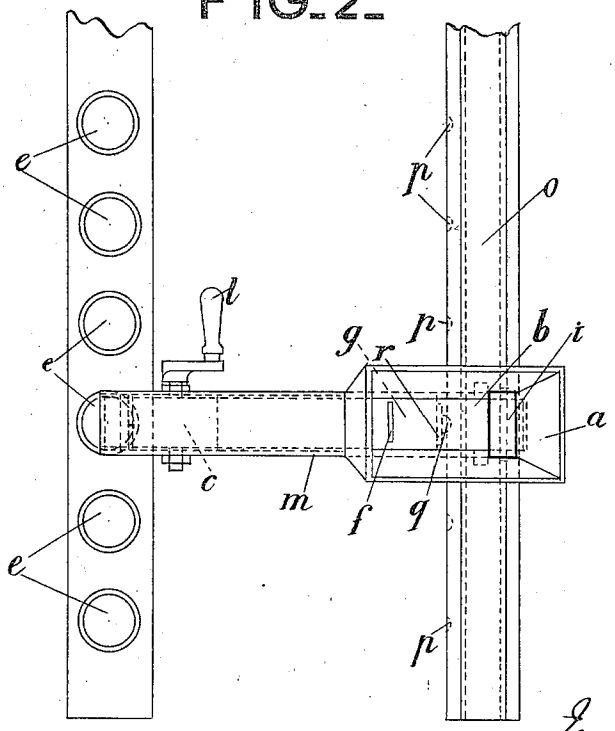

Witnesses:

James H. Anderson

E. E. Warfield

Inventor:

Edouard Janik

by

Mauro, Cameron, Lewis & Massie

attys.

COLUMBIA PLANOGRAPH CO., WASHINGTON, D. C.

UNITED STATES PATENT OFFICE.

EDOUARD JANIK, OF PARIS, FRANCE, ASSIGNOR TO SOCIÉTÉ GÉNÉRALE FRANCAISE DES CAISSES PAYEUSES ET DE CONTRÔLE SYSTEME JANIK, OF PARIS, FRANCE.

APPARATUS FOR CHARGING THE COIN-CONTAINERS OF PAYING-MACHINES.

1,068,661. Specification of Letters Patent. Patented July 29, 1913.

Application filed October 26, 1910. Serial No. 589,233.

To all whom it may concern:

Be it known that I, EDOUARD JANIK, subject of the Emperor of Austria-Hungary, residing at 20 Rue Mogador, Paris, France, have invented new and useful Improvements in Apparatus for Charging the Coin-Containers of Paying-Machines, of which the following is a specification.

The hand charging of the cash containers of paying machines is complicated and causes loss of time.

Now this invention has for its object to dispense completely with such hand charging, and it provides an improved apparatus by means of which the charging of the cash containers is effected automatically by mechanical means.

The coins of one and the same sort, intended for a change container are thrown pell-mell into an aperture having the form of a coin chute the bottom of which is constituted, as regards these coins, by an endless band conveyer, which moves up toward the change container at an inclination such as will enable it to take up readily in its movement the coins placed in contact with it; and that the coins that are situated on top of one another are compelled to become separated from one another by sliding. Consequently the band conveyer in rising obliquely, causes the coins to move one by one toward the change container into which they pass one after the other through a discharging passage.

One construction of the improved apparatus is illustrated by way of example in the accompanying drawings in diagrammatic vertical section in Figure 1, and in diagrammatic plan in Fig. 2.

a is the coin aperture in the form of a coin chute. The bottom of this aperture is constituted by the endless band conveyer *b* guided by two similar guide rollers *c d*. The roller nearest the coin container *e* is arranged higher than the roller nearest the aperture *a* so that the band conveyer *b* travels at an upward angle from the aperture to the coin container. This upward travel is such that the coins that are situated one upon another will slide by reason of the smaller friction, whereas the coins that are placed directly upon the band will be carried up, in the example shown by means of ledges or teeth *f* provided on the conveyer band. In order to prevent the conveyer band *b* from catching in any way in its working chamber, a supporting plate or guide plate *g* is arranged below this space.

In order to prevent the coins from passing out through the aperture at the place where the conveyer band enters, that is to say, at *h*, there is arranged in the angle formed by the front wall of the aperture *a* and the conveyer band, a flap *i* adapted to turn on side pivot pins *k*, so that its lower edge rests loosely on the conveyer band, in such a manner that this flap will form at all times a tight closure of the aperture *h* through which the conveyer band enters.

The actuation of the conveyer band may be effected in any suitable manner, for instance by means of a crank handle *l*.

An apparatus of the construction described may be provided for each of the coin containers of the paying machine. A single apparatus may also be employed for all the coin containers, if all the coin containers are arranged in a series as indicated by way of example in Fig. 2. It is then merely necessary to provide means for shifting the improved charging apparatus from one coin container to another when it is desired to charge all the containers in succession in a rapid and convenient manner. The framing *m* of the charging apparatus in such a case is fitted with a foot *n* having a prismatic guide groove. This groove guides the said foot while the charging apparatus is being shifted from one coin container to another, along a guide bar *o* of corresponding section arranged parallel to the coin containers and fixed relatively to these.

For the purpose of insuring that the charging apparatus in being shifted shall come as exactly as possible in front of the corresponding reservoir independently of the attention given to it by the person making use of the said apparatus, the guide bar *o* is formed opposite the coin containers with notches *p* into which the head *q* of a spring catch *r* mounted on the foot *n* of the framing *m* of the charging apparatus, is adapted to engage. It is to be understood however that any other equivalent device may be employed instead of this automatic stop mechanism.

When the improved apparatus is being used, only those coins must be placed in the cash chute which belong to the corresponding coin container, in order that the coins

shall be fed into the coin container in a rapid and accurate manner on rotating the crank handle that actuates the endless conveyer band. To prevent superposed coins from passing out of the chute *a*, the latter is provided with a member *a'* that approaches the endless conveyer so that it is impossible for two coins to pass out of the chute at the same time.

Having now described my invention, what I claim as new and desire to secure by Letters Patent is:—

In a device of the character described, a plurality of coin containers, a charging apparatus therefor comprising a framework, a coin chute and an endless coin conveyer, a support arranged parallel to said containers, connections between said apparatus and support whereby the former may be moved along the latter and means for securing said apparatus on said support against longitudinal movement.

In testimony whereof I have signed my name to this specification in the presence of two subscribing witnesses.

EDOUARD JANIK.

Witnesses:
DOUMÉ CASALONGA,
H. C. COXE.

Copies of this patent may be obtained for five cents each, by addressing the "Commissioner of Patents, Washington, D. C."