BEST AVAILABLE COPY

United States Patent [19]

Murray et al.

[11] **3,895,226**

[45] **July 15, 1975**

[54] **LUMINAIRE**

[75] Inventors: **Omer E. Murray; Robert G. Kilpatrick,** both of Hendersonville, N.C.

[73] Assignee: **General Electric Company,** Pittsfield, Mass.

[22] Filed: **Oct. 2, 1972**

[21] Appl. No.: **294,243**

[52] **U.S. Cl.**..... **240/11.2 R;** 240/11.4 R; 240/25

[51] **Int. Cl.**..... **F21s 13/10**

[58] **Field of Search**..... 240/11.2 R, 11.4 R, 11, 240/7.2, 25

[56] **References Cited**

UNITED STATES PATENTS

116,476	6/1871	North	240/25
492,320	2/1893	Bodkin	240/25
1,322,490	11/1919	Howse	240/25
1,758,714	5/1930	Owens	240/25
3,339,065	8/1967	Kelly, Jr.	240/25

Primary Examiner—Robert P. Greiner

Attorney, Agent, or Firm—Sidney Greenberg

[57] **ABSTRACT**

A post top luminaire has a frame removably holding window panels surrounding a lamp. The frame is formed of inner corner support members fastened at the bottom to a supporting base member and outer corner trim members secured to the inner corner support members for retaining the window panels in assembly. Additional frame members extending along opposite sides of the panels at the top of the frame assist in retaining the panels in sealed assembly. Upon removal of the outer corner trim members of the frame, the window panels may be slid into and out of the frame for luminaire maintenance service.

1 Claim, 8 Drawing Figures

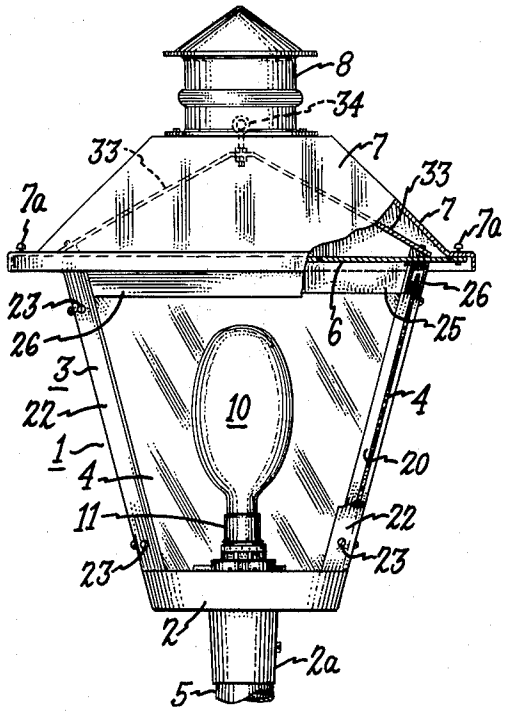

Fig. 1.

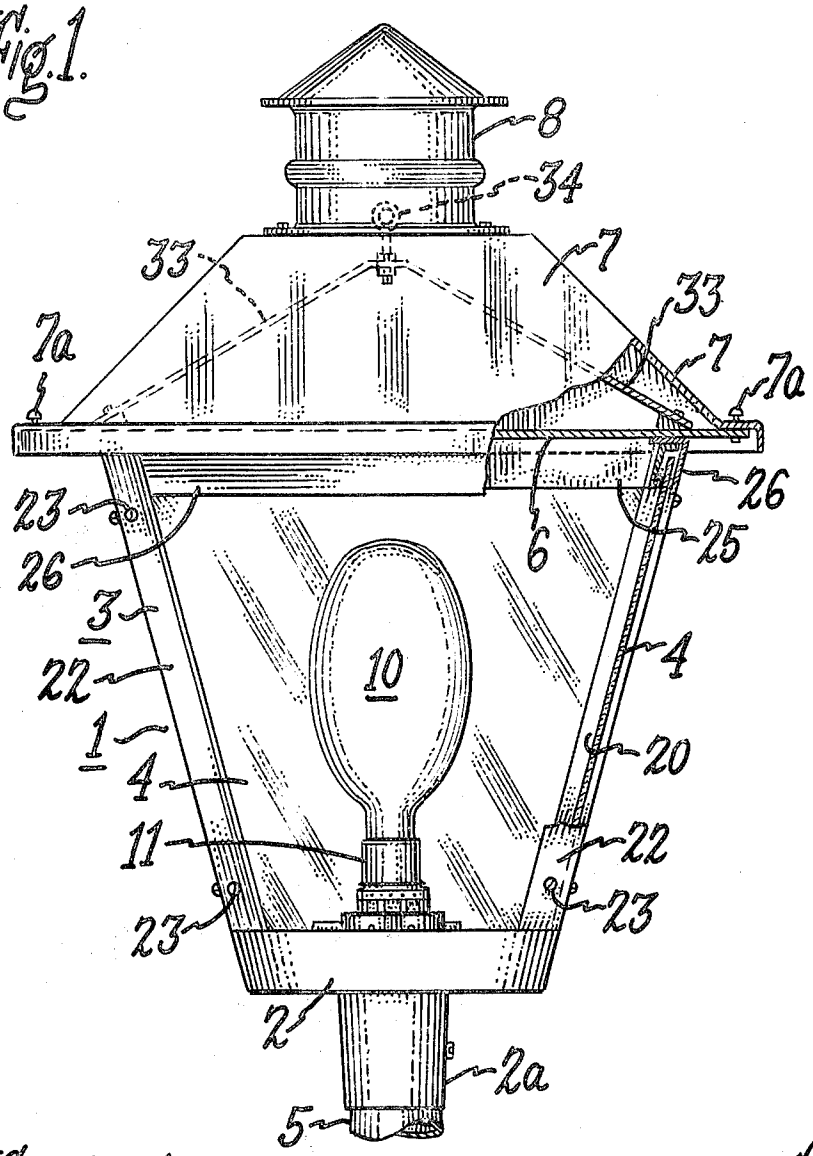
8
34
33
7
33
7a
7
7a
23
26
6
25
26
3
22
10
4
1
20
4
11
22
23
23
2
2a
5

Fig. 4.

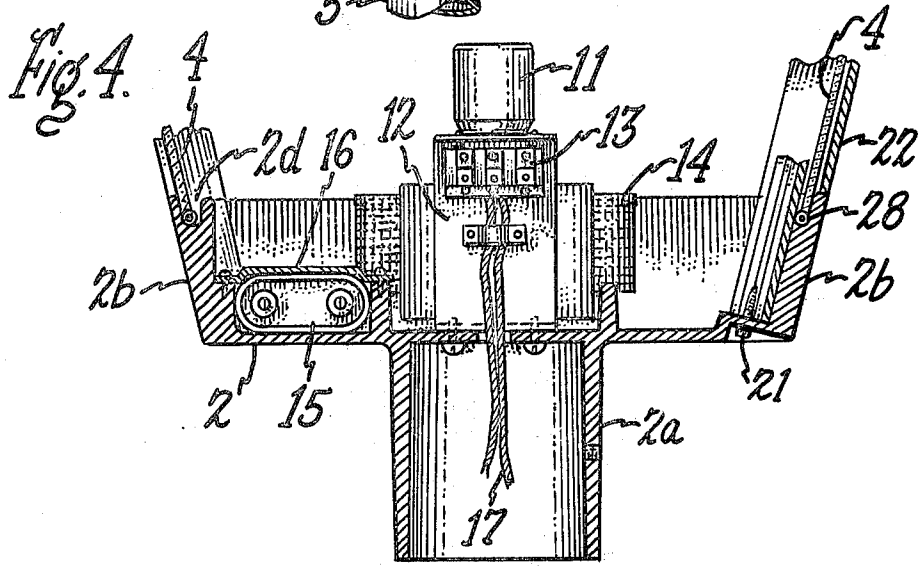
4
11
4
2d
16
12
13
14
22
28
2b
2b
2
15
21
2a
17

Fig. 2.

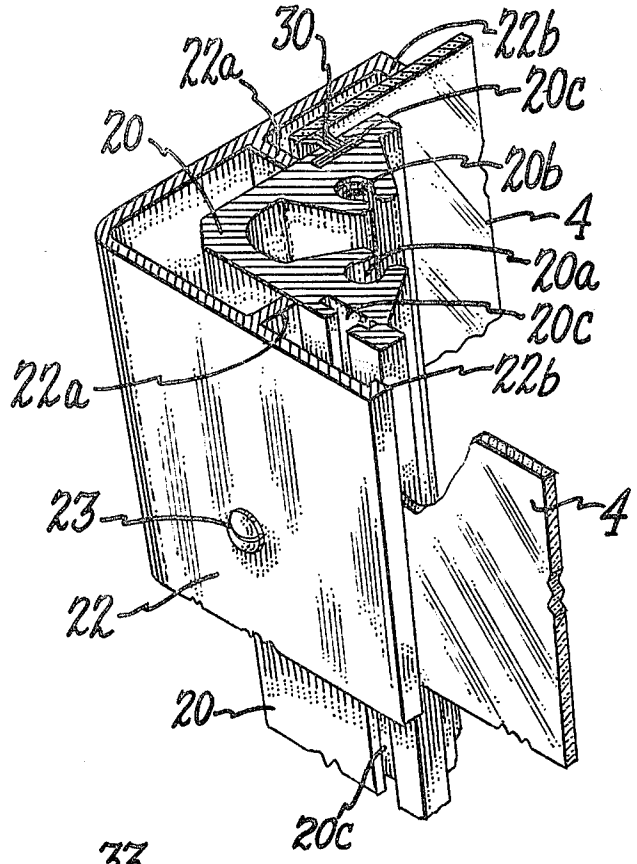
30
22b
22a
20c
20
20b
4
20a
20c
22b
22a
4
23
22
20
20c

Fig. 8.

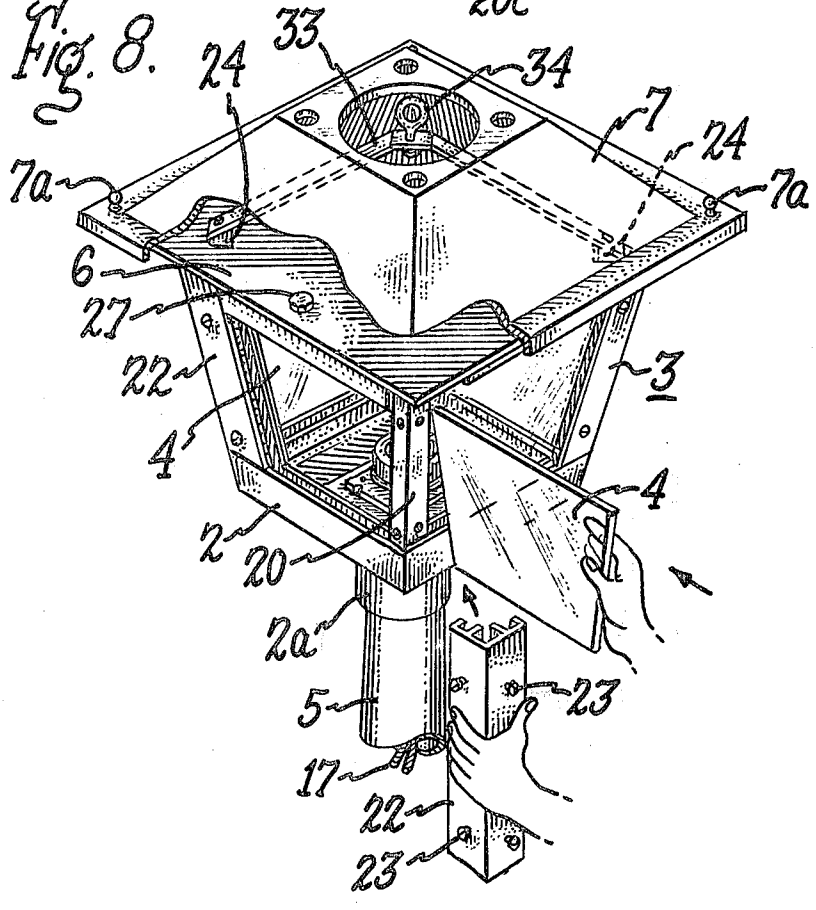
33
34
24
7
24
7a
7a
6
27
22
3
4
4
2
20
2a
5
23
17
22
23

Fig. 3.

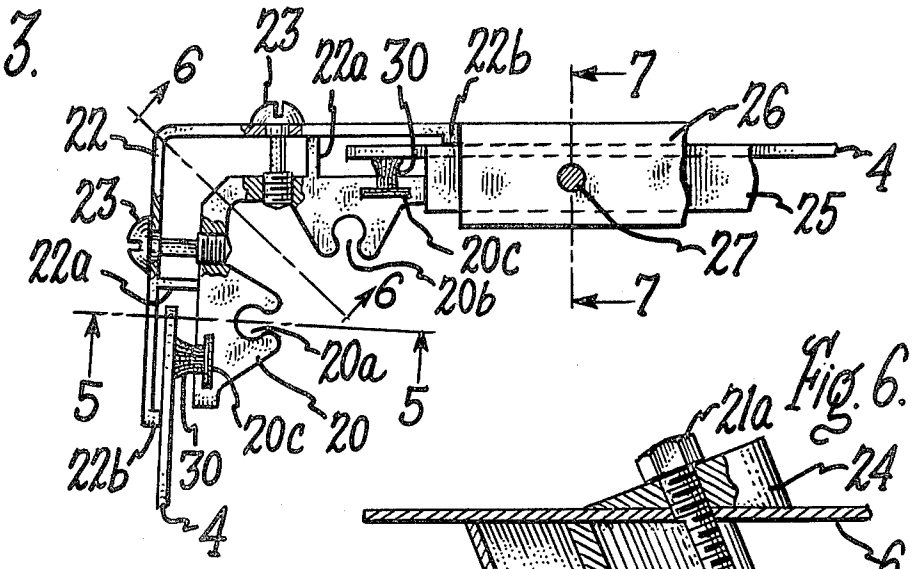

Fig. 6.

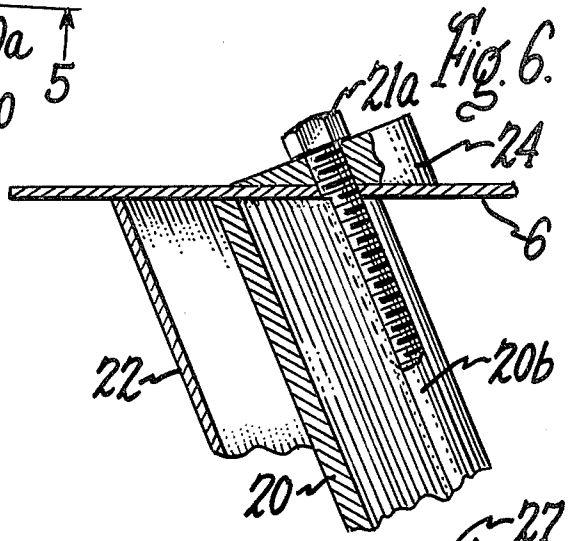

Fig. 5.

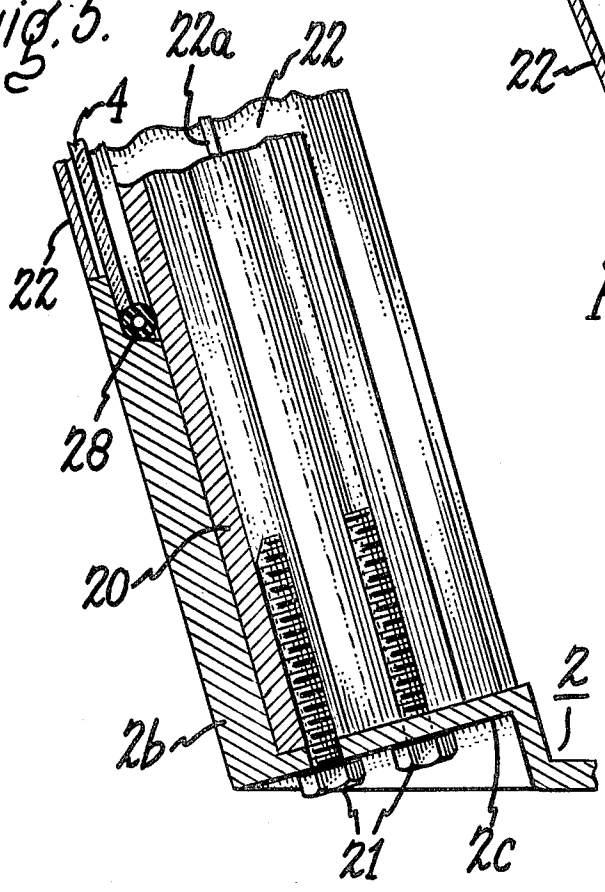

Fig. 7.

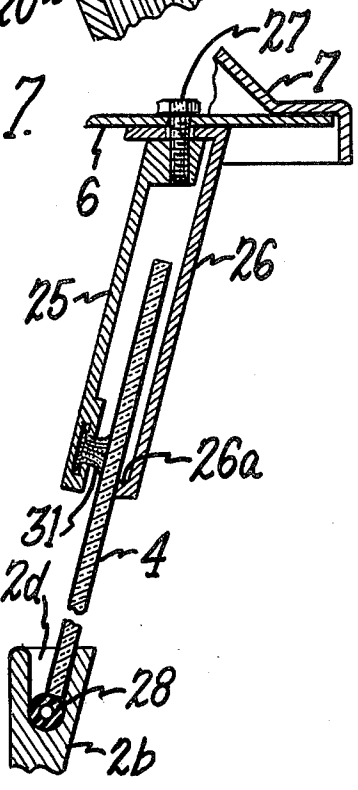

LUMINAIRE

The present invention relates to luminaires, and more particularly to post top luminaires of residential and area lighting type.

It is an object of the invention to provide a luminaire of the above type which is readily manufactured and assembled, has good aesthetic appearance, provides ready access to the interior for maintenance services, and is weather and insect proof.

It is a particular object of the invention to provide a luminaire of the above type having a housing frame constructed for removably holding window panels to permit ready disassembly of the panels from the frame and replacement thereof.

Other objects and advantages will become apparent from the following description and the appended claims.

With the above objects in view, the present invention relates to a luminaire comprising, in combination, a base member having mounting means for attaching the luminaire to a support, lampholder means on the base member adapted to hold a lamp, housing means on the base member defining an enclosure for the lampholder means and lamp, the housing means comprising frame means defining window openings on a plurality of sides and light transmitting panels closing the openings, the frame means comprising pairs of juxtaposed inner corner members and outer corner members, the inner corner members being secured to the base member and the outer corner members being removably attached to the respective inner corner members in spaced relation thereto, the light transmitting panels being arranged in the openings with their edges slidably held between the juxtaposed inner and outer corner members.

The invention will be better understood from the following description taken in conjunction with the accompanying drawings, in which:

FIG. 1 is a view in elevation, partly broken away, of a luminaire embodying the invention;

FIG. 2 is an enlarged detail view in perspective showing the assembly of frame members and window panels at the corners of the luminaire;

FIG. 3 is a top view, partly in section, of the frame corner assembly;

FIG. 4 is a view in cross section of the base member of the luminaire and associated parts;

FIG. 5 is a cross-sectional view of the bottom corner assembly of the luminaire housing taken along the line 5—5 of FIG. 3;

FIG. 6 is a cross-sectional view of the upper corner assembly taken along the line 6—6 of FIG. 3;

FIG. 7 is a cross-sectional view of the upper side portion of the housing assembly taken along the line 7—7 of FIG. 3; and

FIG. 8 is a perspective view of the luminaire showing the manner of replacing the window panel and outer corner member of the frame after removal thereof.

Referring now to the drawings, and particularly to FIG. 1, there is shown a luminaire comprising a housing 1 including a base 2, a four-sided frame 3 forming a window opening on each side, and light transmitting panels 4 covering each window opening. Base 2 has a slipfitter portion 2*a* on its bottom which fits over and is secured to the top of hollow supporting post 5 for mounting the luminaire and has a peripheral upstanding side wall 2*b* (see FIG. 4). Frame 3, which has a construction more specifically described hereinafter, is generally square in horizontal cross-section and tapers downwardly from its upper open end to base 2. A plate 6 (see FIG. 8) secured to the top of frame 3 covers the top opening thereof, and canopy or hood 7 overlying the thus covered frame 3 is secured to plate 6 at its corners by threaded knobs 7*a*. Hood 7 is surmounted by a cupola 8 which encloses a photoelectric control unit (not shown) for controlling the operation of the luminaire, in accordance with conventional practice.

Lamp 10, such as a mercury or sodium vapor gaseous discharge lamp, is removably mounted within frame 3 by means of socket 11 which is secured by bracket 12 to base 2 (see FIG. 4). Also secured to support bracket 12 is terminal board 13. Ballast transformer 14 is mounted on base 2 by suitable means, and ballast capacitor 15 is secured to base 2 by bracket 16. As seen in FIG. 4, transformer 14 and capacitor 15 are mounted in contact with the inner surface of base 2 (or bosses thereof) which thus acts as a heat sink for cooling these electrical operating components. Conducting leads 17 from a source of electrical supply pass upwardly through slipfitter portion 2*a* to the inside of base 2 and are connected to terminal board 13 for electrical connection to the electrical operating components.

In accordance with the invention, frame 3 comprises a plurality of detachable components constructed and arranged to enable the window panels 4 to be readily removed for replacement or to provide access to the interior of the luminaire for relamping and other maintenance services. Such ready access is made possible without substantial disassembly of the frame parts or the necessity for removal of the hood, which in luminaires of this type is often large, heavy and cumbersome. The frame components at each corner, as seen in FIG. 2, include inner corner member 20 and outer corner member 22 juxtaposed in generally parallel, somewhat nested arrangement spaced from each other. These and other frame components described below are typically formed of aluminum extrusions, but they may, of course, be made of other suitable materials. Outer corner member 22 is formed inwardly of its lateral edges with ribs 22*a* for spacing the corner members apart, and the corner members are detachably secured in assembled position by screws 23, which preferably are captive in the outer corner member 22. The latter member is also formed at its lateral edges with inwardly directed ledges 22*b* serving as positioning guides for panel 4 inserted between the corner members. Inner corner member 20, which serves as a structural support in the luminaire assembly, has substantially greater thickness than outer corner member 22 and on its inner side is formed along its length with elongated recess or channel portions 20*a*, 20*b* for receiving fastening screws at its top and bottom ends. On its outer side adjacent its lateral edges, corner member 20 is formed with slots 20*c* which hold sealing material 30 of yieldable weatherstripping type which projects against the adjacent surface of panel 4. At its bottom end (see FIG. 5), corner member 20 rests on an angled indent 2*c* formed in the bottom corners of base 2 and is fastened thereto by a pair of screws 21. At its top end (see FIG. 6), corner member is fastened to cover plate 6 by similar screws 21*a* (only one shown) received in the top ends of recesses 20*a*, 20*b*, with a wedge block 24 being arranged between the screw heads and plate

6 to compensate for the angle between plate 6 and corner member 20.

The bottom end of outer corner member 22 abuts the top edge of base wall 2*b* (see FIGS. 1 and 5) and its top end abuts the underside of plate 6.

The frame assembly further includes (see FIG. 7) along each side at the top an inner side strip 25 and an outer side strip 26 arranged substantially co-extensive with each other on opposite sides of the upper portion of panel 4. Both side strips 25, 26 have flanges along their upper edges which overlap one another as shown and by means of which they are secured to plate 6 by screws 27 suitably spaced along their upper edges.

As will be evident from FIG. 3, the sides of outer corner member 22 are wider than, and extend somewhat beyond, the sides of inner corner member 20. In the assembly, the end of inner side strip 25 abuts the lateral edge of inner corner member 20, whereas the end of outer side strip 26 abuts the lateral edge of outer corner member 22. Accordingly, the joints thus formed are laterally displaced from one another so as to largely prevent leakage of light outwardly therethrough thereby providing improved night time appearance and avoiding attraction and entry of insects into the luminaire.

Near its bottom edge, inner side strip 25 is formed with an elongated slot for holding weatherstripping seal material 31 in contact with panel 4, similarly to seal material 30 previously described. Outer side strip 26 is formed along its bottom edge with a ledge 26*a* serving as a positioning guide for panel 4 similarly to ledge 22*b* of member 22 as previously described.

As seen in FIGS. 4 and 7, the top edge of wall 2*b* of base 2 is formed with groove 2*d* extending around wall 2*b*, except at the corners (see FIG. 5), in which is received an O-ring gasket 28 for sealing the joint at the bottom edge of panel 4 which rests in groove 2*d*. The inner wall portion defining groove 2*d* is omitted in the corner regions of the frame to accommodate inner corner member 20 which lies along the inner surface of base wall 2*b*.

The parts of frame 3 are preferably constructed and arranged such that the outer surfaces of corner members 22, side strips 26, and base wall 2*b* are flush with one another, so that the assembly affords the aesthetically pleasing appearance of a unitary frame.

Spacing ribs 22*a* on corner member 22 serve to properly position the latter member so that its outer surfaces are flush with those of base wall 2*b* and outer side strip 26, and also to provide for adequate space between the nested corner members to accommodate panel 4 and seal 30 and to receive the threaded portion of screws 23 when the latter are retracted.

The weatherstrip seal 30, in addition to having the sealing function described, serves to hold panel 4 against outer corner member 22 for providing good appearance and fit of the panels in the assembly. The seal also allows panel 4 to slide during thermal expansion and contraction and permits the panels (which may be of plastic material) to be slid into and out of position as described below without undue risk of scratching during assembly, relamping and panel replacement operations.

As illustrated in FIG. 8, to remove panel 4, it is necessary merely to retract the four captive screws 23 holding the adjacent outer corner member 22 to its associated inner corner member 20 and remove corner member 22, and then after lifting panel 4 out of groove 2*d* to slide the panel out of the frame assembly. To replace panel 4, the reverse procedure is used.

Luminaires of the described type may be of large bulk and heavy weight, and in view of this a lifting truss is preferably incorporated in the luminaire to facilitate handling during assembly, packing and installation. In the illustrated embodiment (see FIGS. 1 and 8), the lifting truss comprises angle member 33 arranged under hood 7 with its opposite ends secured to wedge blocks 24 and having at its apex an eye bolt 34 extending upwardly through the central aperture of hood 7 in which cupola 8 is mounted. The truss being thus connected to the structural support members of the luminaire, damage to the relatively weaker parts of the unit as a result of attachment of the eye bolt to the lifting or packing supports is thereby largely avoided.

While the present invention has been described with reference to particular embodiments thereof, it will be understood that numerous modifications may be made by those skilled in the art without actually departing from the scope of the invention. Therefore, the appended claims are intended to cover all such equivalent variations as come within the true spirit and scope of the invention.

What we claim as new and desire to secure by Letters Patent of the United States is:

1. A luminaire comprising, in combination, a base member having mounting means for attaching the luminaire to a support, lampholder means on said base member adapted to hold a lamp, housing means on said base member defining an enclosure for said lampholder means and lamp, said housing means comprising frame means defining window openings on a plurality of sides and light transmitting panels closing said openings, said frame means comprising pairs of juxtaposed inner corner members and outer corner members, said inner corner members being secured to said base member, said light transmitting panels being arranged in said openings with their edges slidably held between said juxtaposed inner and outer corner members, and means removably securing said outer corner members to said respective inner corner members in spaced relation thereto for holding said light transmitting panels in assembly therebetween, said frame means being open at its top, and cover means secured to said frame means covering the open top thereof, each said panel being laterally slidable out of said frame means upon removal of an adjacent outer corner member without removal of said cover means, said cover means comprising a canopy having an opening at its top, and lifting means in said canopy secured to said inner corner members and accessible through said canopy opening for lifting the luminaire.

* * * * *