(No Model.) 5 Sheets—Sheet 1.

W. A. HOLMES.

WIRE FENCE WEAVING MACHINE.

No. 590,484. Patented Sept. 21, 1897.

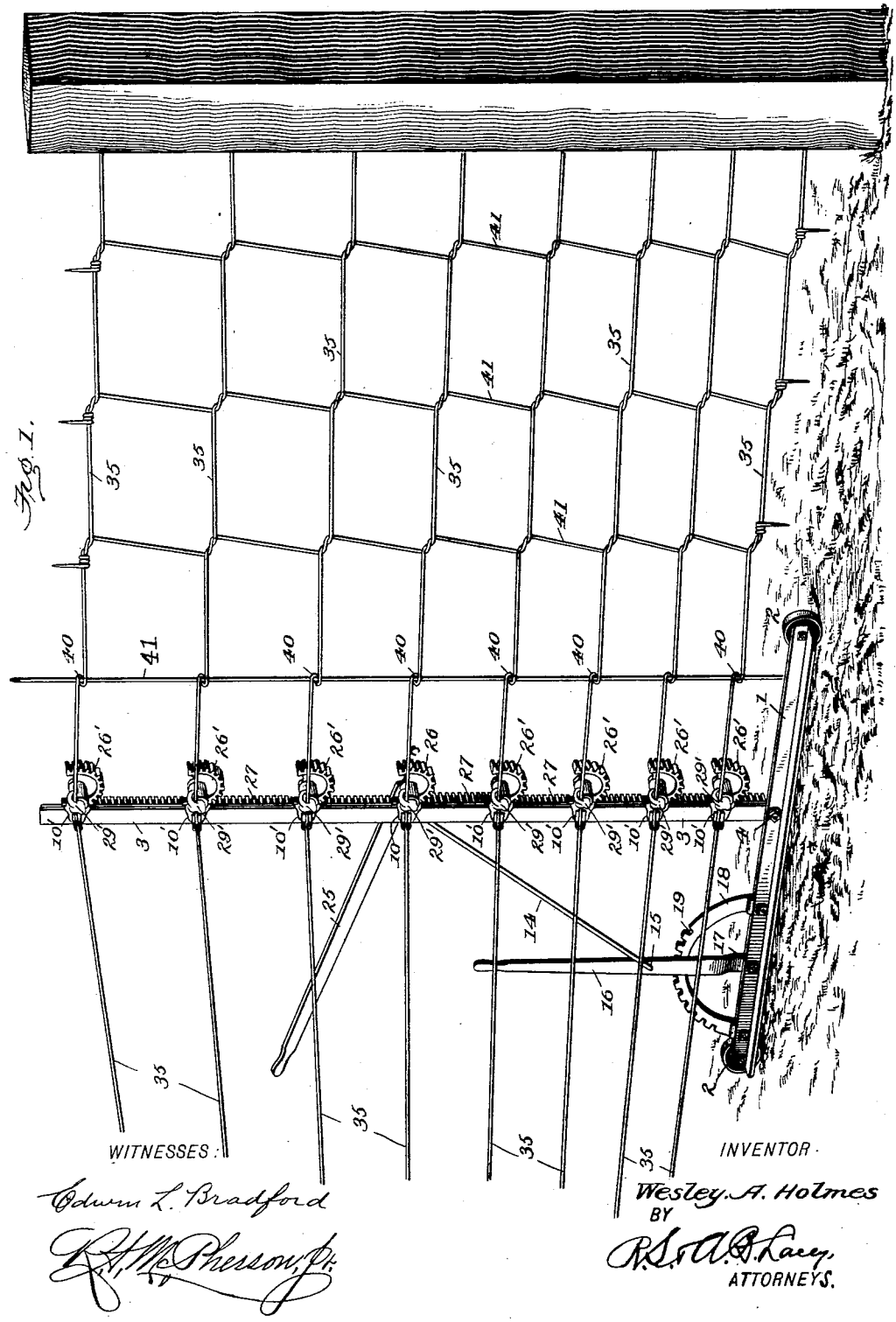

THE NORRIS PETERS CO., PHOTO-LITHO., WASHINGTON, D. C.

(No Model.) 5 Sheets—Sheet 2.

W. A. HOLMES.

WIRE FENCE WEAVING MACHINE.

No. 590,484. Patented Sept. 21, 1897.

Fig. 2.

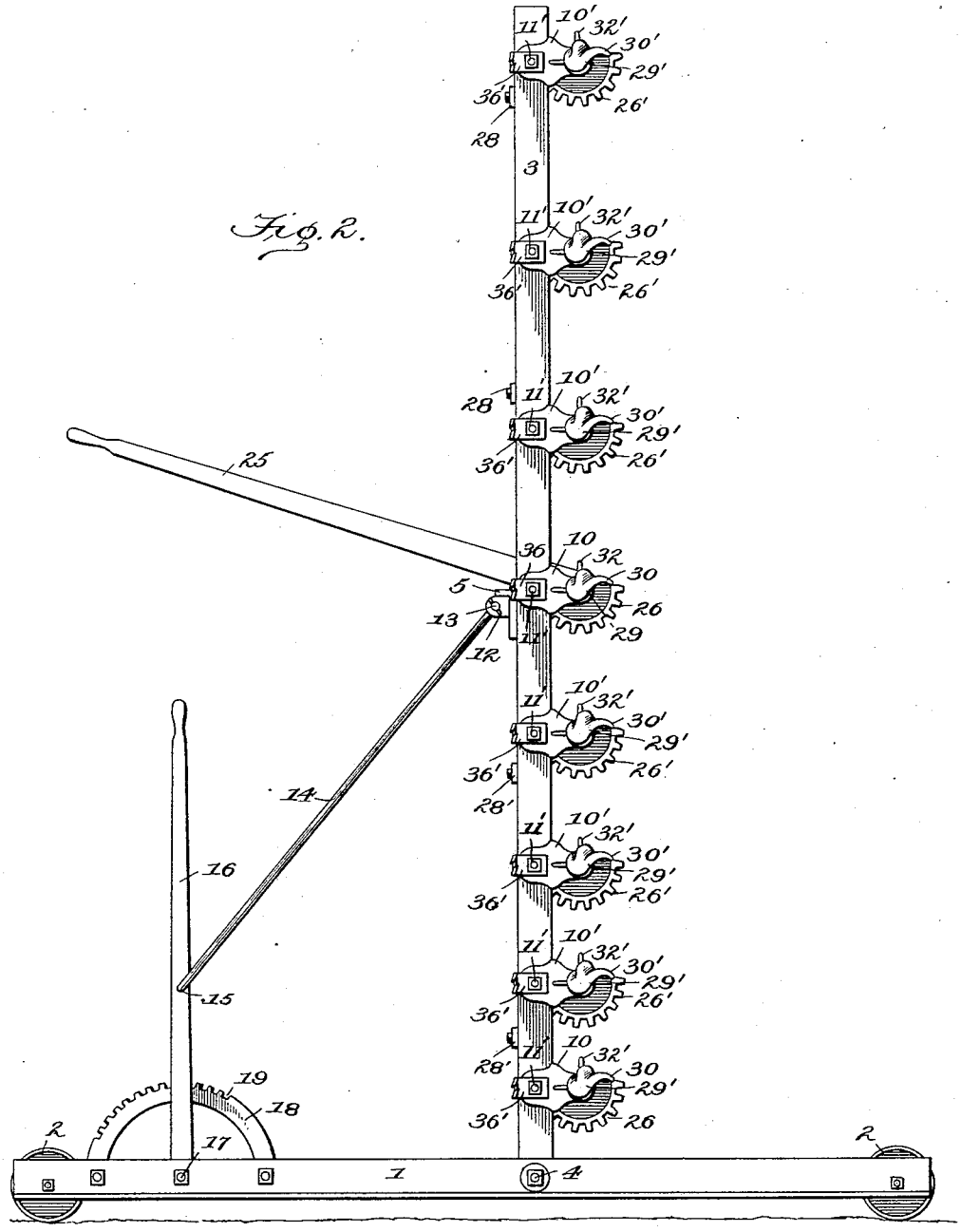

WITNESSES:

Edwin L. Bradford

R. F. McPherson Jr.

INVENTOR

Wesley A. Holmes

BY

R. S. & A. B. Lacey,

ATTORNEYS.

THE NORRIS PETERS CO., PHOTO-LITHO., WASHINGTON, D. C.

(No Model.) 5 Sheets—Sheet 3.

W. A. HOLMES.

WIRE FENCE WEAVING MACHINE.

No. 590,484. Patented Sept. 21, 1897.

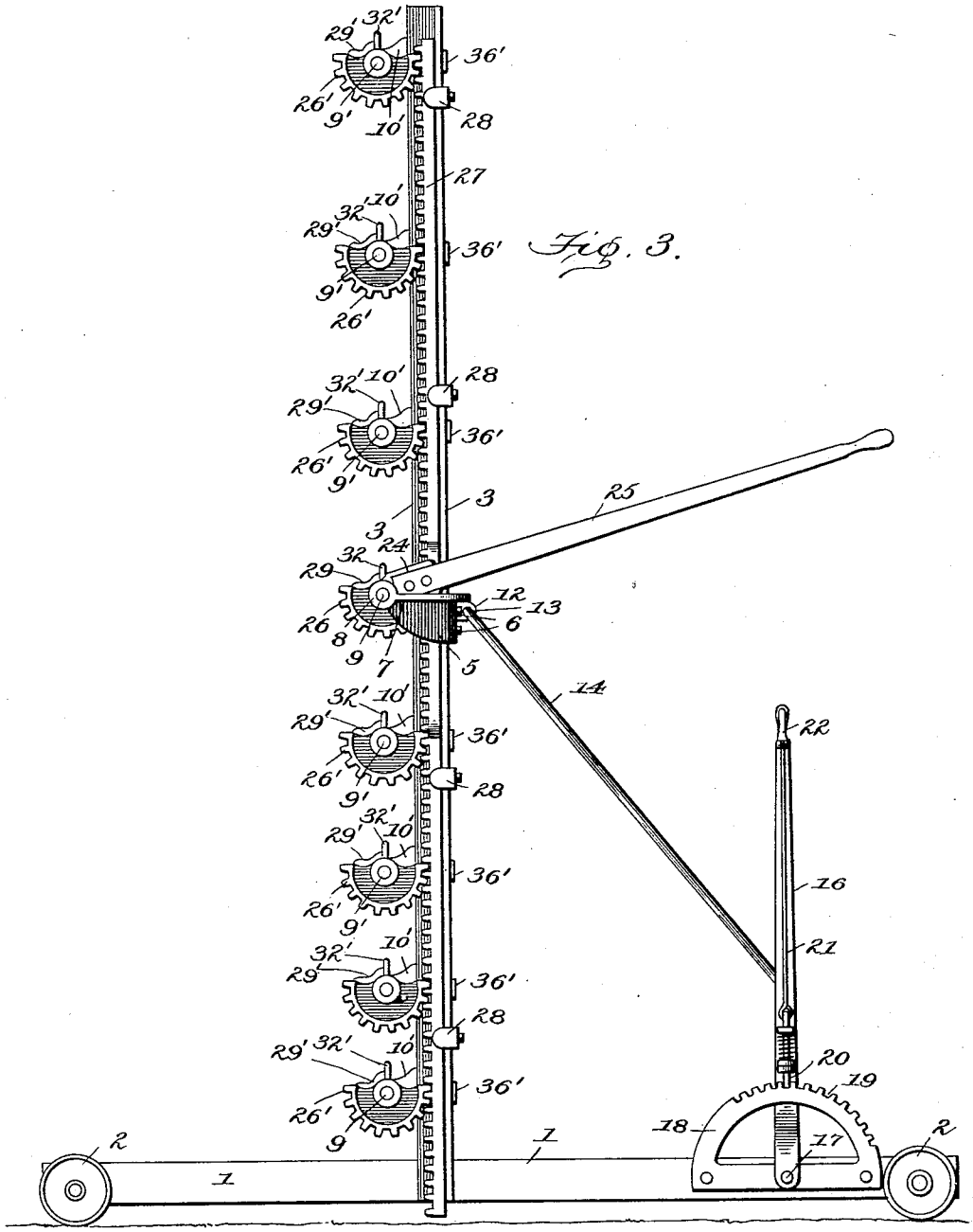

Fig. 3.

WITNESSES:

Edwin L. Bradford

INVENTOR

Wesley A. Holmes

BY

R. S. & A. B. Lacey,

ATTORNEYS.

THE NORRIS PETERS CO., PHOTO-LITHO., WASHINGTON, D. C.

(No Model.) 5 Sheets—Sheet 4.

W. A. HOLMES.

WIRE FENCE WEAVING MACHINE.

No. 590,484. Patented Sept. 21, 1897.

Fig. 4.

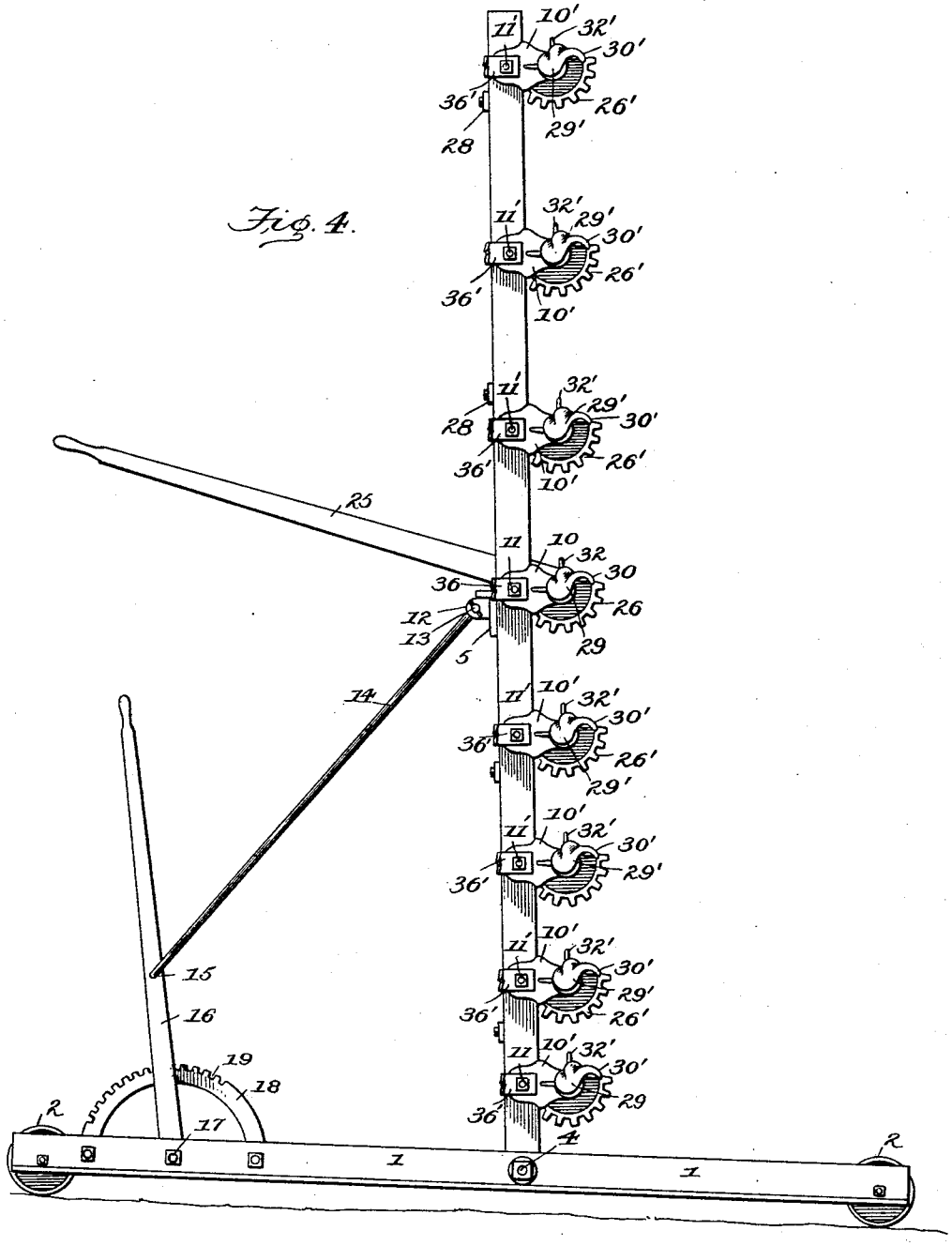

WITNESSES:

Edwin L. Bradford

R. H. McPherson, Jr.

INVENTOR

Wesley A. Holmes

BY

R. A. P. Lacey,

ATTORNEYS.

THE NORRIS PETERS CO., PHOTO-LITHO., WASHINGTON, D. C.

(No Model.) 5 Sheets—Sheet 5.

W. A. HOLMES.

WIRE FENCE WEAVING MACHINE.

No. 590,484. Patented Sept. 21, 1897.

Fig. 5.

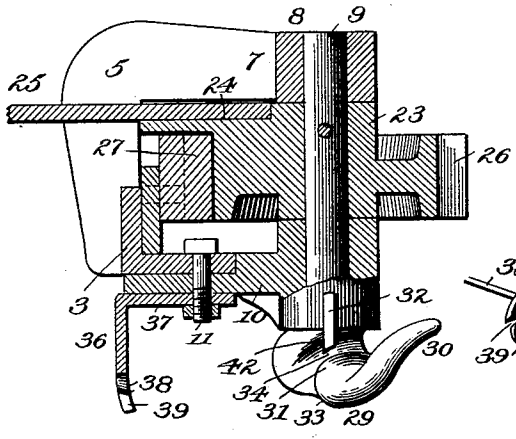

Fig. 6.

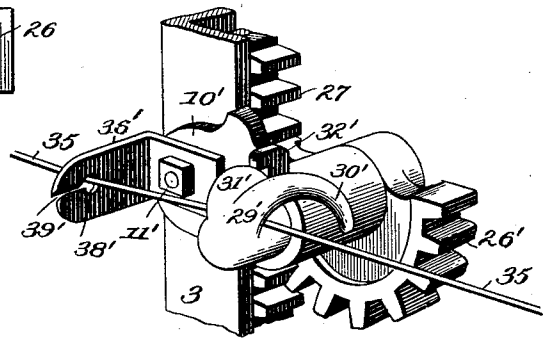

Fig. 7.

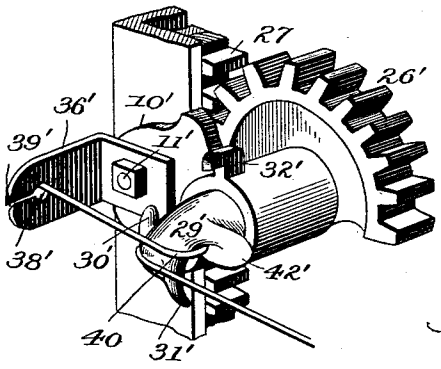

Fig. 8.

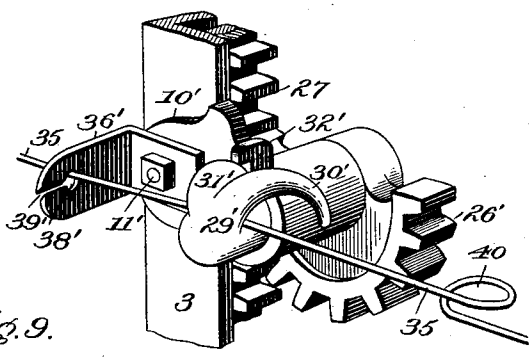

Fig. 9.

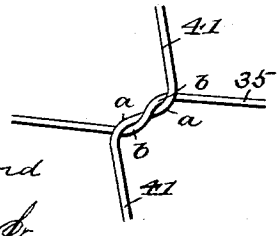

WITNESSES:

Edwin L. Bradford

R. A. McPherson Jr.

INVENTOR

Wesley. A. Holmes

BY

R. D. & A. R. Lacey.

ATTORNEYS.

THE NORRIS PETERS CO., PHOTO-LITHO., WASHINGTON, D. C.

UNITED STATES PATENT OFFICE.

WESLEY A. HOLMES, OF CADIZ, OHIO.

WIRE-FENCE-WEAVING MACHINE.

SPECIFICATION forming part of Letters Patent No. 590,484, dated September 21, 1897.

Application filed February 12, 1897. Serial No. 623,171. (No model.)

To all whom it may concern:

Be it known that I, WESLEY A. HOLMES, a citizen of the United States, residing at Cadiz, in the county of Harrison and State of Ohio, have invented certain new and useful Improvements in Portable Wire-Fence-Weaving Machines; and I do hereby declare the following to be a full, clear, and exact description of the invention, such as will enable others skilled in the art to which it appertains to make and use the same.

My invention relates to improvements in portable wire-fence-weaving machines; and the object is to provide a simple, convenient, and effective machine for rapidly and economically weaving wire fences.

To this end the novelty consists in the construction, combination, and arrangement of the same, as will be hereinafter more fully described, and particularly pointed out in the claims.

In the accompanying drawings the same reference-characters indicate the same parts of the invention.

Figure 1 is a perspective view of my improved wire-fence-weaving machine as it appears in operation. Fig. 2 is a front elevation of the same. Fig. 3 is a rear view of the machine. Fig. 4 shows the machine adjusted to weave uphill. Fig. 5 is a transverse horizontal section through the main operating-shaft. Fig. 6 is a detached perspective view of one of the rotary loop-forming hooks, showing the first position of one of the horizontal fence-wires in the hooks. Fig. 7 is a similar view showing the loop formed on the hook. Fig. 8 is a similar view showing the formed loop released from the hook and in position to receive the vertical stay-wire, and Fig. 9 is an enlarged plan view of a section of fence as woven by my machine.

1 represents a horizontal bar of angle-iron, to the outer ends of the vertical flange of which are secured the carrying-wheels 2, which support the machine.

3 represents a vertical angle-iron standard, pivoted at its lower end by the bolt 4 to the horizontal bar 1.

5 represents a fixed bracket, secured by bolts 6 about midway of the standard, and the outer end of its arm 7 forms a bearing 8 for one end of the main shaft 9, the opposite end of which is journaled in a bracket 10, secured to the opposite side of the standard by a bolt 11.

12 represents an integral lug on the bracket 5, in which is pivoted the upper angular end 13 of diagonal brace-rod 14, the lower angular end 15 of which is pivoted in the hand-lever 16, fulcrumed on the bolt 17, secured in the vertical flange of the bar 1. This same bolt also secures the bracket in place.

The upper semicircular edge of the bracket 18 is formed with a series of rectangular notches 19, which engage in the lower end of the sliding pawl 20, the upper end of which is connected to a rod 21, extending upwardly and somewhat parallel with the lever 14 and terminating in an angular handle 22. By this construction it will be seen that the standard can be adjusted forward or backward at an inclination to the bar to correspond to the rise or fall of the ground over which the fence is being built, the purpose of which is to form the loops in the fence-wires in a vertical plane to secure the stay-wires in a perpendicular parallel position. One of these adjusted positions is shown in Fig. 4.

23 represents a hub fixed on the shaft 9, and it is provided with an integral radial socket 24, in which is secured the operating-lever 25. This hub is also provided with an integral segmental gear 26, which meshes with a vertical rack-bar 27, having a bearing in the angle of the standard, and is held in place by the guide-arms 28, so as to allow a free vertical movement of said rack-bar.

The forward end of the shaft 9 is formed with a rotary hook 29, having an inwardly spirally curved finger 30, the heel 33 of which is formed with a radial spiral flange 31. A short integral spiral flange 42 is formed on the contiguous end of the shaft 9 concentric therewith and parallel with the flange 31 on the heel 33 of the finger 30.

32 represents an integral arm on the bracket 10, which extends diagonally across the heel 33 of the hook 29 and to within a sufficient distance of the flange 31 to leave a guideway 34 for the passage of the horizontal fence-wire 35, which extends through said guideway under the arm 34 and also under the outer curved end of the finger 30.

36 represents a horizontal guide-arm, the

angular base-flange 37 of which is secured by the head of the bolt 11 to the bracket 10, and the outer end of this arm is formed with a guide-orifice 38 and an oblique slot 39, through which the wire 35 is inserted in the guide-orifice. It will be seen that by slacking up the bolt 11 the guide-bracket can be adjusted to conform to the proper alinement of the fence-wire with reference to the rotary hook.

A series of brackets 10′, identical in construction with the bracket 10, are secured at suitable intervals to the standard by bolts 11′, and each bracket forms the bearing for a shaft 9′, the rear end of which carries a fixed segmental gear 26′, which meshes with the vertically-reciprocating rack-bar 27 and is operated thereby when the said rack-bar is reciprocated by the segmental gear on the main shaft.

Each one of the brackets 10′ is provided with an integral arm 32′, and each shaft 9′ terminates in a rotary hook 29′, having a spirally-curved finger 30′ and a radial flange 31′, and a guide-arm 36′ is secured in each bracket 10′ and is provided with a guide-orifice 38′ and oblique slot 39′ for the insertion of the fence-wire.

I will now proceed to describe the operation of one of the rotary hooks in forming the loops in the horizontal fence-wire for the reception of the stay-wire, and as all the hooks operate simultaneously and in exactly the same manner the description of the operation of one will answer for all.

By referring generally to Fig. 1 and more particularly to Figs. 6, 7, and 8 it will be seen that the horizontal fence-wire 35 is first inserted in the guide-orifice 38, through the slot 39 in the guide-arm 36, and then passed through the guideway 34 and under the spiral finger 30 of the rotary hook 29 and the end secured to a suitable post, the coil or reel from which this wire is fed being suitably anchored or conveniently fixed in the line of the proposed fence and sufficient tension applied to the coil or wire to hold it while the loops are being formed. The hand-lever 25 is then thrown over into the position shown in Fig. 7, which gives a half-rotation to the hook 29, the finger of which presses the wire down and draws it backward and around the heel to form the open loop 40. At the same time the finger 30 is forming the rear end of the loop the spiral flange 42 is forcing the rear end of the wire outwardly toward the heel of the finger, the combined action of the finger and flange being to form the loop and form it in a horizontal plane, as shown. The lever 25 is then thrown back to its first position. (Shown in Fig. 6.) This operation causes the spiral flange 31 on the heel of the hook to engage the loop and hold it in place on the hook between the parallel spiral flanges 31 and 42 until the lever has been thrown forward to its full limit, which position brings the heel of the hook in alinement with the opening of the loop, which allows the machine to be moved forward to its next looping-point and leaves the already-formed loop in a horizontal plane ready for the reception of the stay-wire. The machine is then moved forward on its rollers to the position where the next stay-wire is to be placed, leaving a vertical series of horizontal loops 40 formed in the horizontal fence-wires, as shown in Fig. 1, and a vertical stay-wire 41 is then dropped down through the series of vertical loops 40 and its upper end is twisted around the top fence-wire to secure it, leaving the immediate end of the stay-wire projecting, as shown, to form a barb. The lower end of the stay-wire 41 is then twisted around the lower or bottom fence-wire and secured by twisting, the immediate end of the stay-wire being left projecting to form a barb, as in the first instance. The stay-wire is now secured to the top and bottom fence-wire, loosely encompassed by the loops in all the fence-wires, and when the hand-lever 25 is again operated to form a new series of loops in the fence-wires the fingers 30, in engaging the horizontal fence-wire to form a new open loop, draws the already-formed open loop encompassing the stay-wire longitudinally into a shape resembling an extended spiral, and in so doing twists the stay-wire out of the vertical line and into an approximately horizontal line in order to form a lock-joint at the point of junction of the stay-wire with the horizontal fence-wire. This joint when completed forms a shoulder *a* on the stay-wire above and below the fence-wire and a shoulder *b* on the fence-wire on each side of the stay-wire, thus preventing the horizontal fence-wires from moving up or down on the vertical stay-wires and the vertical stay-wires from any horizontal movement in either direction on the horizontal fence-wires.

In weaving my fence I prefer to form the picket or stay wires of a low grade of steel wire possessing a certain degree of resiliency, so that the tendency at all times of the stay-wire to resume its normal position will have the effect of contracting the longitudinal wires at the joints to take up the expansion due to natural causes, and should an unusual accidental strain be imparted to said longitudinal wires—as, for instance, a tree fall across the line of fencing—the fence wires will elongate at the joints, drawing on the stay-wires in doing so, so as to expand or elongate sufficiently to compensate for the temporary strain, and when the obstructing cause is removed the resiliency of the stay-wires will again take up the expansion of the fence-wires and restore them to their normal position.

Having thus fully described my improved wire-fence-weaving machine, what I claim as new and useful, and desire to secure by Letters Patent of the United States, is—

1. A fence-weaving machine, comprising a vertical standard, brackets fixed to said standard, a transverse horizontal shaft journaled in said brackets and formed with an integral

oscillating hook having a spirally and inwardly curved finger extending diagonally across the rotary path of said hook, and means substantially as described for imparting an oscillating motion to said shaft, as and for the purpose set forth.

2. A fence-weaving machine, comprising a vertical standard, brackets secured in said standard, a transverse horizontal shaft journaled in said brackets and having a projecting end formed with an integral oscillating hook arranged approximately at a right angle to said shaft and terminating in a spirally and inwardly curved finger extending diagonally across the rotary path of said hook, and having its heel provided with an integral spiral flange, and a short integral spiral flange arranged parallel therewith on the contiguous end of said horizontal shaft, substantially as and for the purpose set forth.

3. A wire-fence-weaving machine, comprising the vertical standard 3, the brackets 5 and 10, the latter formed with an integral diagonal arm 32, in combination with the horizontal shaft 9 journaled in said brackets, one end of which projects through said bracket 10 and is provided with an integral oscillating hook 29, arranged approximately at a right angle to said shaft, and terminating in a spirally and inwardly curved finger 30 extending diagonally across the path of said hook, and having its heel formed with an integral spiral flange 31, and a similar flange formed on the contiguous end of the shaft 9, substantially as and for the purpose set forth.

4. In a wire-fence-weaving machine, a rotary hook adapted to engage the horizontal fence-wire and form an open loop, and simultaneously close a previously-formed loop, substantially as and for the purpose set forth.

5. A wire-fence-weaving machine, comprising a rotary hook adapted to engage a horizontal fence-wire and form a consecutive series of open loops in said fence-wire, for the reception of a series of vertical stay-wires, and means substantially as described for simultaneously closing the last previously-formed loop, to secure the stay-wire in place therein, in the act of forming a new loop, substantially as and for the purpose set forth.

In testimony whereof I affix my signature in presence of two witnesses.

WESLEY A. HOLMES.

Witnesses:
H. J. ENNIS,
D. C. FINNEY.