(12) INTERNATIONAL APPLICATION PUBLISHED UNDER THE PATENT COOPERATION TREATY (PCT)

(19) World Intellectual Property Organization
International Bureau

(43) International Publication Date
27 June 2019 (27.06.2019)

WIPO | PCT

(10) International Publication Number
WO 2019/119058 A1

(51) International Patent Classification:
A61M 16/06 (2006.01) *A61M 16/20* (2006.01)

(21) International Application Number:
PCT/AU2018/051382

(22) International Filing Date:
21 December 2018 (21.12.2018)

(25) Filing Language: English

(26) Publication Language: English

(30) Priority Data:
62/609,909 22 December 2017 (22.12.2017) US

(71) Applicant: **RESMED PTY LTD** [AU/AU]; 1 Elizabeth Macarthur Drive, Bella Vista, New South Wales 2153 (AU).

(72) Inventors: **BALUCHAGI, Ravikumar**; c/- ResMed Pty Ltd, 1 Elizabeth Macarthur Drive, Bella Vista, New South Wales 2153 (AU). **GOLDSPINK, Lachlan Richard**; c/- ResMed Pty Ltd, 1 Elizabeth Macarthur Drive, Bella Vista, New South Wales 2153 (AU). **SANGADI, Nookarajesh Varma**; c/- ResMed Pty Ltd, 1 Elizabeth Macarthur Drive, Bella Vista, New South Wales 2153 (AU). **EVES, Matthew**; c/- ResMed Pty Ltd, 1 Elizabeth Macarthur Drive, Bella Vista, New South Wales 2153 (AU).

(74) Agent: **DAVIDSON, Geoff** et al.; Halfords IP, Level 7, 1 Market Street, Sydney, New South Wales 2000 (AU).

(81) Designated States *(unless otherwise indicated, for every kind of national protection available)*: AE, AG, AL, AM, AO, AT, AU, AZ, BA, BB, BG, BH, BN, BR, BW, BY, BZ, CA, CH, CL, CN, CO, CR, CU, CZ, DE, DJ, DK, DM, DO, DZ, EC, EE, EG, ES, FI, GB, GD, GE, GH, GM, GT, HN, HR, HU, ID, IL, IN, IR, IS, JO, JP, KE, KG, KH, KN, KP, KR, KW, KZ, LA, LC, LK, LR, LS, LU, LY, MA, MD, ME, MG, MK, MN, MW, MX, MY, MZ, NA, NG, NI, NO, NZ, OM, PA, PE, PG, PH, PL, PT, QA, RO, RS, RU, RW, SA, SC, SD, SE, SG, SK, SL, SM, ST, SV, SY, TH, TJ, TM, TN, TR, TT, TZ, UA, UG, US, UZ, VC, VN, ZA, ZM, ZW.

(84) Designated States *(unless otherwise indicated, for every kind of regional protection available)*: ARIPO (BW, GH, GM, KE, LR, LS, MW, MZ, NA, RW, SD, SL, ST, SZ, TZ, UG, ZM, ZW), Eurasian (AM, AZ, BY, KG, KZ, RU, TJ,

(54) Title: CONDUIT HEADGEAR CONNECTOR FOR PATIENT INTERFACE

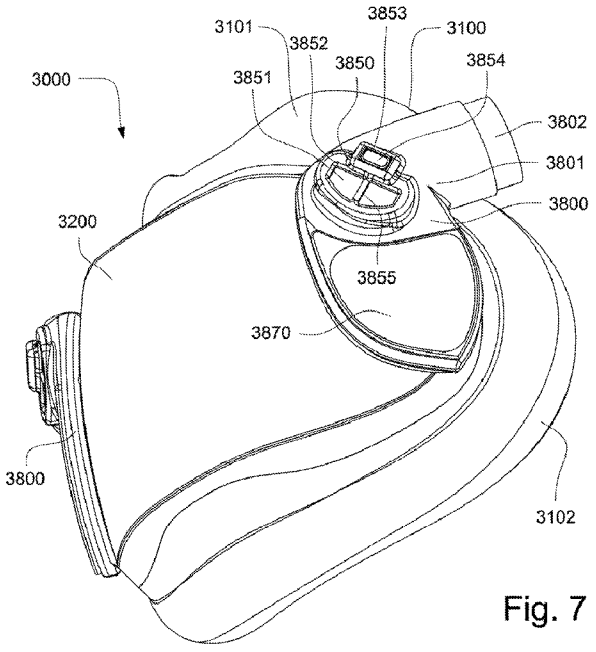

Fig. 7

(57) Abstract: A patient interface may include: a plenum chamber at least partly defining a patient interface chamber, a seal-forming structure constructed and arranged to form a seal with a region of the patient's face, at least one conduit, at least one conduit connector configured to pneumatically connect the at least one conduit to the plenum chamber to provide a flow of air at a therapeutic pressure to the patient interface chamber for breathing by the patient, and a positioning and stabilising structure to provide a force to hold the seal-forming structure on the patient's head, the positioning and stabilising structure comprising at least one tie, wherein the at least one conduit connector includes an anti-asphyxia valve configured to allow the patient to breath from ambient through their mouth in the absence of a flow of pressurised air.

WO 2019/119058 A1

[Continued on next page]

TM), European (AL, AT, BE, BG, CH, CY, CZ, DE, DK, EE, ES, FI, FR, GB, GR, HR, HU, IE, IS, IT, LT, LU, LV, MC, MK, MT, NL, NO, PL, PT, RO, RS, SE, SI, SK, SM, TR), OAPI (BF, BJ, CF, CG, CI, CM, GA, GN, GQ, GW, KM, ML, MR, NE, SN, TD, TG).

Declarations under Rule 4.17:

— *of inventorship (Rule 4.17(iv))*

Published:

— *with international search report (Art. 21(3))*

— *before the expiration of the time limit for amending the claims and to be republished in the event of receipt of amendments (Rule 48.2(h))*

CONDUIT HEADGEAR CONNECTOR FOR PATIENT INTERFACE

[0001] A portion of the disclosure of this patent document contains material which is subject to copyright protection. The copyright owner has no objection to the facsimile reproduction by anyone of the patent document or the patent disclosure, as it appears in Patent Office patent files or records, but otherwise reserves all copyright rights whatsoever.

1 CROSS-REFERENCE TO RELATED APPLICATIONS

[0002] This application claims the benefit of U.S. Provisional Application No. 62/609,909, filed December 22, 2017, the entire contents of which are incorporated herein by reference.

2 BACKGROUND OF THE TECHNOLOGY

2.1 FIELD OF THE TECHNOLOGY

[0003] The present technology relates to one or more of the screening, diagnosis, monitoring, treatment, prevention and amelioration of respiratory-related disorders. The present technology also relates to medical devices or apparatus, and their use.

2.2 DESCRIPTION OF THE RELATED ART

2.2.1 Human Respiratory System and its Disorders

[0004] The respiratory system of the body facilitates gas exchange. The nose and mouth form the entrance to the airways of a patient.

[0005] The airways include a series of branching tubes, which become narrower, shorter and more numerous as they penetrate deeper into the lung. The prime function of the lung is gas exchange, allowing oxygen to move from the inhaled air into the venous blood and carbon dioxide to move in the opposite direction. The trachea divides into right and left main bronchi, which further divide eventually into terminal bronchioles. The bronchi make up the conducting airways, and do not take part in gas exchange. Further divisions of the airways lead to the respiratory bronchioles, and eventually to the alveoli. The alveolated region of the lung is where the gas exchange takes place, and is referred to as the respiratory zone. See "*Respiratory Physiology*", by John B. West, Lippincott Williams & Wilkins, 9th edition published 2012.

[0006] A range of respiratory disorders exist. Certain disorders may be characterised by particular events, e.g. apneas, hypopneas, and hyperpneas.

[0007] Examples of respiratory disorders include Obstructive Sleep Apnea (OSA), Cheyne-Stokes Respiration (CSR), respiratory insufficiency, Obesity Hyperventilation Syndrome (OHS), Chronic Obstructive Pulmonary Disease (COPD), Neuromuscular Disease (NMD) and Chest wall disorders.

[0008] Obstructive Sleep Apnea (OSA), a form of Sleep Disordered Breathing (SDB), is characterised by events including occlusion or obstruction of the upper air passage during sleep. It results from a combination of an abnormally small upper airway and the normal loss of muscle tone in the region of the tongue, soft palate and posterior oropharyngeal wall during sleep. The condition causes the affected patient to stop breathing for periods typically of 30 to 120 seconds in duration, sometimes 200 to 300 times per night. It often causes excessive daytime somnolence, and it may cause cardiovascular disease and brain damage. The syndrome is a common disorder, particularly in middle aged overweight males, although a person affected may have no awareness of the problem. See US Patent No. 4,944,310 (Sullivan).

[0009] Cheyne-Stokes Respiration (CSR) is another form of sleep disordered breathing. CSR is a disorder of a patient's respiratory controller in which there are rhythmic alternating periods of waxing and waning ventilation known as CSR cycles. CSR is characterised by repetitive de-oxygenation and re-oxygenation of the arterial blood. It is possible that CSR is harmful because of the repetitive hypoxia. In some patients CSR is associated with repetitive arousal from sleep, which causes severe sleep disruption, increased sympathetic activity, and increased afterload. See US Patent No. 6,532,959 (Berthon-Jones).

[0010] Respiratory failure is an umbrella term for respiratory disorders in which the lungs are unable to inspire sufficient oxygen or exhale sufficient CO_2 to meet the patient's needs. Respiratory failure may encompass some or all of the following disorders.

[0011] A patient with respiratory insufficiency (a form of respiratory failure) may experience abnormal shortness of breath on exercise.

[0012] Obesity Hyperventilation Syndrome (OHS) is defined as the combination of severe obesity and awake chronic hypercapnia, in the absence of other known causes for hypoventilation. Symptoms include dyspnea, morning headache and excessive daytime sleepiness.

[0013] Chronic Obstructive Pulmonary Disease (COPD) encompasses any of a group of lower airway diseases that have certain characteristics in common. These include increased resistance to air movement, extended expiratory phase of respiration, and loss of the normal elasticity of the lung. Examples of COPD are emphysema and chronic bronchitis. COPD is caused by chronic tobacco smoking (primary risk factor), occupational exposures, air pollution and genetic factors. Symptoms include: dyspnea on exertion, chronic cough and sputum production.

[0014] Neuromuscular Disease (NMD) is a broad term that encompasses many diseases and ailments that impair the functioning of the muscles either directly via intrinsic muscle pathology, or indirectly via nerve pathology. Some NMD patients are characterised by progressive muscular impairment leading to loss of ambulation, being wheelchair-bound, swallowing difficulties, respiratory muscle weakness and, eventually, death from respiratory failure. Neuromuscular disorders can be divided into rapidly progressive and slowly progressive: (i) Rapidly progressive disorders: Characterised by muscle impairment that worsens over months and results in death within a few years (e.g. Amyotrophic lateral sclerosis (ALS) and Duchenne muscular dystrophy (DMD) in teenagers); (ii) Variable or slowly progressive disorders: Characterised by muscle impairment that worsens over years and only mildly reduces life expectancy (e.g. Limb girdle, Facioscapulohumeral and Myotonic muscular dystrophy). Symptoms of respiratory failure in NMD include: increasing generalised weakness, dysphagia, dyspnea on exertion and at rest, fatigue, sleepiness, morning headache, and difficulties with concentration and mood changes.

[0015] Chest wall disorders are a group of thoracic deformities that result in inefficient coupling between the respiratory muscles and the thoracic cage. The disorders are usually characterised by a restrictive defect and share the potential of long term hypercapnic respiratory failure. Scoliosis and/or kyphoscoliosis may cause severe respiratory failure. Symptoms of respiratory failure include: dyspnea on

exertion, peripheral oedema, orthopnea, repeated chest infections, morning headaches, fatigue, poor sleep quality and loss of appetite.

[0016] A range of therapies have been used to treat or ameliorate such conditions. Furthermore, otherwise healthy individuals may take advantage of such therapies to prevent respiratory disorders from arising. However, these have a number of shortcomings.

2.2.2 Therapy

[0017] Various therapies, such as Continuous Positive Airway Pressure (CPAP) therapy, Non-invasive ventilation (NIV) and Invasive ventilation (IV) have been used to treat one or more of the above respiratory disorders.

[0018] Continuous Positive Airway Pressure (CPAP) therapy has been used to treat Obstructive Sleep Apnea (OSA). The mechanism of action is that continuous positive airway pressure acts as a pneumatic splint and may prevent upper airway occlusion, such as by pushing the soft palate and tongue forward and away from the posterior oropharyngeal wall. Treatment of OSA by CPAP therapy may be voluntary, and hence patients may elect not to comply with therapy if they find devices used to provide such therapy one or more of: uncomfortable, difficult to use, expensive and aesthetically unappealing.

[0019] Non-invasive ventilation (NIV) provides ventilatory support to a patient through the upper airways to assist the patient breathing and/or maintain adequate oxygen levels in the body by doing some or all of the work of breathing. The ventilatory support is provided via a non-invasive patient interface. NIV has been used to treat CSR and respiratory failure, in forms such as OHS, COPD, NMD and Chest Wall disorders. In some forms, the comfort and effectiveness of these therapies may be improved.

[0020] Invasive ventilation (IV) provides ventilatory support to patients that are no longer able to effectively breathe themselves and may be provided using a tracheostomy tube. In some forms, the comfort and effectiveness of these therapies may be improved.

2.2.3 Treatment Systems

[0021] These therapies may be provided by a treatment system or device. Such systems and devices may also be used to screen, diagnose, or monitor a condition without treating it.

[0022] A treatment system may comprise a Respiratory Pressure Therapy Device (RPT device), an air circuit, a humidifier, a patient interface, and data management.

[0023] Another form of treatment system is a mandibular repositioning device.

2.2.3.1 Patient Interface

[0024] A patient interface may be used to interface respiratory equipment to its wearer, for example by providing a flow of air to an entrance to the airways. The flow of air may be provided via a mask to the nose and/or mouth, a tube to the mouth or a tracheostomy tube to the trachea of a patient. Depending upon the therapy to be applied, the patient interface may form a seal, e.g., with a region of the patient's face, to facilitate the delivery of gas at a pressure at sufficient variance with ambient pressure to effect therapy, e.g., at a positive pressure of about 10 cmH_2O relative to ambient pressure. For other forms of therapy, such as the delivery of oxygen, the patient interface may not include a seal sufficient to facilitate delivery to the airways of a supply of gas at a positive pressure of about 10 cmH_2O.

[0025] Certain other mask systems may be functionally unsuitable for the present field. For example, purely ornamental masks may be unable to maintain a suitable pressure. Mask systems used for underwater swimming or diving may be configured to guard against ingress of water from an external higher pressure, but not to maintain air internally at a higher pressure than ambient.

[0026] Certain masks may be clinically unfavourable for the present technology e.g. if they block airflow via the nose and only allow it via the mouth.

[0027] Certain masks may be uncomfortable or impractical for the present technology if they require a patient to insert a portion of a mask structure in their mouth to create and maintain a seal via their lips.

[0028] Certain masks may be impractical for use while sleeping, e.g. for sleeping while lying on one's side in bed with a head on a pillow.

[0029] The design of a patient interface presents a number of challenges. The face has a complex three-dimensional shape. The size and shape of noses and heads varies considerably between individuals. Since the head includes bone, cartilage and soft tissue, different regions of the face respond differently to mechanical forces. The jaw or mandible may move relative to other bones of the skull. The whole head may move during the course of a period of respiratory therapy.

[0030] As a consequence of these challenges, some masks suffer from being one or more of obtrusive, aesthetically undesirable, costly, poorly fitting, difficult to use, and uncomfortable especially when worn for long periods of time or when a patient is unfamiliar with a system. Wrongly sized masks can give rise to reduced compliance, reduced comfort and poorer patient outcomes. Masks designed solely for aviators, masks designed as part of personal protection equipment (e.g. filter masks), SCUBA masks, or for the administration of anaesthetics may be tolerable for their original application, but nevertheless such masks may be undesirably uncomfortable to be worn for extended periods of time, e.g., several hours. This discomfort may lead to a reduction in patient compliance with therapy. This is even more so if the mask is to be worn during sleep.

[0031] CPAP therapy is highly effective to treat certain respiratory disorders, provided patients comply with therapy. If a mask is uncomfortable, or difficult to use a patient may not comply with therapy. Since it is often recommended that a patient regularly wash their mask, if a mask is difficult to clean (e.g., difficult to assemble or disassemble), patients may not clean their mask and this may impact on patient compliance.

[0032] While a mask for other applications (e.g. aviators) may not be suitable for use in treating sleep disordered breathing, a mask designed for use in treating sleep disordered breathing may be suitable for other applications.

[0033] For these reasons, patient interfaces for delivery of CPAP during sleep form a distinct field.

2.2.3.1.1 Seal-forming structure

[0034] Patient interfaces may include a seal-forming structure. Since it is in direct contact with the patient's face, the shape and configuration of the seal-forming structure can have a direct impact the effectiveness and comfort of the patient interface.

[0035] A patient interface may be partly characterised according to the design intent of where the seal-forming structure is to engage with the face in use. In one form of patient interface, a seal-forming structure may comprise a first sub-portion to form a seal around the left naris and a second sub-portion to form a seal around the right naris. In one form of patient interface, a seal-forming structure may comprise a single element that surrounds both nares in use. Such single element may be designed to for example overlay an upper lip region and a nasal bridge region of a face. In one form of patient interface a seal-forming structure may comprise an element that surrounds a mouth region in use, e.g. by forming a seal on a lower lip region of a face. In one form of patient interface, a seal-forming structure may comprise a single element that surrounds both nares and a mouth region in use. These different types of patient interfaces may be known by a variety of names by their manufacturer including nasal masks, full-face masks, nasal pillows, nasal puffs and oro-nasal masks.

[0036] A seal-forming structure that may be effective in one region of a patient's face may be inappropriate in another region, e.g. because of the different shape, structure, variability and sensitivity regions of the patient's face. For example, a seal on swimming goggles that overlays a patient's forehead may not be appropriate to use on a patient's nose.

[0037] Certain seal-forming structures may be designed for mass manufacture such that one design fit and be comfortable and effective for a wide range of different face shapes and sizes. To the extent to which there is a mismatch between the shape of the patient's face, and the seal-forming structure of the mass-manufactured patient interface, one or both must adapt in order for a seal to form.

[0038] One type of seal-forming structure extends around the periphery of the patient interface, and is intended to seal against the patient's face when force is

applied to the patient interface with the seal-forming structure in confronting engagement with the patient's face. The seal-forming structure may include an air or fluid filled cushion, or a moulded or formed surface of a resilient seal element made of an elastomer such as a rubber. With this type of seal-forming structure, if the fit is not adequate, there will be gaps between the seal-forming structure and the face, and additional force will be required to force the patient interface against the face in order to achieve a seal.

[0039] Another type of seal-forming structure incorporates a flap seal of thin material positioned about the periphery of the mask so as to provide a self-sealing action against the face of the patient when positive pressure is applied within the mask. Like the previous style of seal forming portion, if the match between the face and the mask is not good, additional force may be required to achieve a seal, or the mask may leak. Furthermore, if the shape of the seal-forming structure does not match that of the patient, it may crease or buckle in use, giving rise to leaks.

[0040] Another type of seal-forming structure may comprise a friction-fit element, e.g. for insertion into a naris, however some patients find these uncomfortable.

[0041] Another form of seal-forming structure may use adhesive to achieve a seal. Some patients may find it inconvenient to constantly apply and remove an adhesive to their face.

[0042] A range of patient interface seal-forming structure technologies are disclosed in the following patent applications, assigned to ResMed Limited: WO 1998/004310; WO 2006/074513; WO 2010/135785.

[0043] One form of nasal pillow is found in the Adam Circuit manufactured by Puritan Bennett. Another nasal pillow, or nasal puff is the subject of US Patent 4,782,832 (Trimble *et al.*), assigned to Puritan-Bennett Corporation.

[0044] ResMed Limited has manufactured the following products that incorporate nasal pillows: SWIFT™ nasal pillows mask, SWIFT™ II nasal pillows mask, SWIFT™ LT nasal pillows mask, SWIFT™ FX nasal pillows mask and MIRAGE LIBERTY™ full-face mask. The following patent applications, assigned to

ResMed Limited, describe examples of nasal pillows masks: International Patent Application WO2004/073778 (describing amongst other things aspects of the ResMed Limited SWIFT™ nasal pillows), US Patent Application 2009/0044808 (describing amongst other things aspects of the ResMed Limited SWIFT™ LT nasal pillows); International Patent Applications WO 2005/063328 and WO 2006/130903 (describing amongst other things aspects of the ResMed Limited MIRAGE LIBERTY™ full-face mask); International Patent Application WO 2009/052560 (describing amongst other things aspects of the ResMed Limited SWIFT™ FX nasal pillows).

2.2.3.1.2 Positioning and stabilising

[0045] A seal-forming structure of a patient interface used for positive air pressure therapy is subject to the corresponding force of the air pressure to disrupt a seal. Thus a variety of techniques have been used to position the seal-forming structure, and to maintain it in sealing relation with the appropriate portion of the face.

[0046] One technique is the use of adhesives. See for example US Patent Application Publication No. US 2010/0000534. However, the use of adhesives may be uncomfortable for some.

[0047] Another technique is the use of one or more straps and/or stabilising harnesses. Many such harnesses suffer from being one or more of ill-fitting, bulky, uncomfortable and awkward to use.

2.2.3.2 Respiratory Pressure Therapy (RPT) Device

[0048] A respiratory pressure therapy (RPT) device may be used individually or as part of a system to implement one or more of a number of therapies described above, such as by operating the device to generate a flow of air for delivery to an interface to the airways. The flow of air may be pressurised. Examples of RPT devices include a CPAP device and a ventilator.

[0049] Air pressure generators are known in a range of applications, e.g. industrial-scale ventilation systems. However, air pressure generators for medical applications have particular requirements not fulfilled by more generalised air pressure generators, such as the reliability, size and weight requirements of medical devices. In addition, even devices designed for medical treatment may suffer from

shortcomings, pertaining to one or more of: comfort, noise, ease of use, efficacy, size, weight, manufacturability, cost, and reliability.

[0050] An example of the special requirements of certain RPT devices is acoustic noise.

[0051] Table of noise output levels of prior RPT devices (one specimen only, measured using test method specified in ISO 3744 in CPAP mode at 10 cmH_2O).

[0052] RPT Device name	[0053] A-weighted sound pressure level dB(A)	[0054] Year (approx.)
[0055] C-Series Tango™	[0056] 31.9	[0057] 2007
[0058] C-Series Tango™ with Humidifier	[0059] 33.1	[0060] 2007
[0061] S8 Escape™ II	[0062] 30.5	[0063] 2005
[0064] S8 Escape™ II with H4i™ Humidifier	[0065] 31.1	[0066] 2005
[0067] S9 AutoSet™	[0068] 26.5	[0069] 2010
[0070] S9 AutoSet™ with H5i Humidifier	[0071] 28.6	[0072] 2010

[0073] One known RPT device used for treating sleep disordered breathing is the S9 Sleep Therapy System, manufactured by ResMed Limited. Another example of an RPT device is a ventilator. Ventilators such as the ResMed Stellar™ Series of Adult and Paediatric Ventilators may provide support for invasive and non-invasive non-

dependent ventilation for a range of patients for treating a number of conditions such as but not limited to NMD, OHS and COPD.

[0074] The ResMed Elisée™ 150 ventilator and ResMed VS III™ ventilator may provide support for invasive and non-invasive dependent ventilation suitable for adult or paediatric patients for treating a number of conditions. These ventilators provide volumetric and barometric ventilation modes with a single or double limb circuit. RPT devices typically comprise a pressure generator, such as a motor-driven blower or a compressed gas reservoir, and are configured to supply a flow of air to the airway of a patient. In some cases, the flow of air may be supplied to the airway of the patient at positive pressure. The outlet of the RPT device is connected via an air circuit to a patient interface such as those described above.

[0075] The designer of a device may be presented with an infinite number of choices to make. Design criteria often conflict, meaning that certain design choices are far from routine or inevitable. Furthermore, the comfort and efficacy of certain aspects may be highly sensitive to small, subtle changes in one or more parameters.

2.2.3.3 Humidifier

[0076] Delivery of a flow of air without humidification may cause drying of airways. The use of a humidifier with an RPT device and the patient interface produces humidified gas that minimizes drying of the nasal mucosa and increases patient airway comfort. In addition in cooler climates, warm air applied generally to the face area in and about the patient interface is more comfortable than cold air.

[0077] A range of artificial humidification devices and systems are known, however they may not fulfil the specialised requirements of a medical humidifier.

[0078] Medical humidifiers are used to increase humidity and/or temperature of the flow of air in relation to ambient air when required, typically where the patient may be asleep or resting (e.g. at a hospital). A medical humidifier for bedside placement may be small. A medical humidifier may be configured to only humidify and/or heat the flow of air delivered to the patient without humidifying and/or heating the patient's surroundings. Room-based systems (e.g. a sauna, an air conditioner, or an evaporative cooler), for example, may also humidify air that is breathed in by the patient, however those systems would also humidify and/or heat the entire room,

which may cause discomfort to the occupants. Furthermore medical humidifiers may have more stringent safety constraints than industrial humidifiers

[0079] While a number of medical humidifiers are known, they can suffer from one or more shortcomings. Some medical humidifiers may provide inadequate humidification, some are difficult or inconvenient to use by patients.

2.2.3.4 Data Management

[0080] There may be clinical reasons to obtain data to determine whether the patient prescribed with respiratory therapy has been "compliant", e.g. that the patient has used their RPT device according to one or more "compliance rules". One example of a compliance rule for CPAP therapy is that a patient, in order to be deemed compliant, is required to use the RPT device for at least four hours a night for at least 21 of 30 consecutive days. In order to determine a patient's compliance, a provider of the RPT device, such as a health care provider, may manually obtain data describing the patient's therapy using the RPT device, calculate the usage over a predetermined time period, and compare with the compliance rule. Once the health care provider has determined that the patient has used their RPT device according to the compliance rule, the health care provider may notify a third party that the patient is compliant.

[0081] There may be other aspects of a patient's therapy that would benefit from communication of therapy data to a third party or external system.

[0082] Existing processes to communicate and manage such data can be one or more of costly, time-consuming, and error-prone.

2.2.3.5 Mandibular repositioning

[0083] A mandibular repositioning device (MRD) or mandibular advancement device (MAD) is one of the treatment options for sleep apnea and snoring. It is an adjustable oral appliance available from a dentist or other supplier that holds the lower jaw (mandible) in a forward position during sleep. The MRD is a removable device that a patient inserts into their mouth prior to going to sleep and removes following sleep. Thus, the MRD is not designed to be worn all of the time. The MRD may be custom made or produced in a standard form and includes a bite impression portion designed to allow fitting to a patient's teeth. This mechanical

protrusion of the lower jaw expands the space behind the tongue, puts tension on the pharyngeal walls to reduce collapse of the airway and diminishes palate vibration.

[0084] In certain examples a mandibular advancement device may comprise an upper splint that is intended to engage with or fit over teeth on the upper jaw or maxilla and a lower splint that is intended to engage with or fit over teeth on the upper jaw or mandible. The upper and lower splints are connected together laterally via a pair of connecting rods. The pair of connecting rods are fixed symmetrically on the upper splint and on the lower splint.

[0085] In such a design the length of the connecting rods is selected such that when the MRD is placed in a patient's mouth the mandible is held in an advanced position. The length of the connecting rods may be adjusted to change the level of protrusion of the mandible. A dentist may determine a level of protrusion for the mandible that will determine the length of the connecting rods.

[0086] Some MRDs are structured to push the mandible forward relative to the maxilla while other MADs, such as the ResMed Narval CC™ MRD are designed to retain the mandible in a forward position. This device also reduces or minimises dental and temporo-mandibular joint (TMJ) side effects. Thus, it is configured to minimises or prevent any movement of one or more of the teeth.

2.2.3.6 Vent technologies

[0087] Some forms of treatment systems may include a vent to allow the washout of exhaled carbon dioxide. The vent may allow a flow of gas from an interior space of a patient interface, e.g., the plenum chamber, to an exterior of the patient interface, e.g., to ambient.

[0088] The vent may comprise an orifice and gas may flow through the orifice in use of the mask. Many such vents are noisy. Others may become blocked in use and thus provide insufficient washout. Some vents may be disruptive of the sleep of a bed partner 1100 of the patient 1000, e.g. through noise or focussed airflow.

[0089] ResMed Limited has developed a number of improved mask vent technologies. See International Patent Application Publication No. WO 1998/034665; International Patent Application Publication No. WO 2000/078381; US Patent No.

6,581,594; US Patent Application Publication No. US 2009/0050156; US Patent Application Publication No. 2009/0044808.

[0090] Table of noise of prior masks (ISO 17510-2:2007, 10 cmH_2O pressure at 1m)

[0091] Mask name	[0092] Mask type	[0093] A-weighted sound power level dB(A) (uncertainty)	[0094] A-weighted sound pressure dB(A) (uncertainty)	[0095] Year (approx.)
[0096] Glue-on (*)	[0097] nasal	[0098] 50.9	[0099] 42.9	[0100] 1981
[0101] ResCare standard (*)	[0102] nasal	[0103] 31.5	[0104] 23.5	[0105] 1993
[0106] ResMed Mirage™ (*)	[0107] nasal	[0108] 29.5	[0109] 21.5	[0110] 1998
[0111] ResMed UltraMirage™	[0112] nasal	[0113] 36 (3)	[0114] 28 (3)	[0115] 2000
[0116] ResMed Mirage Activa™	[0117] nasal	[0118] 32 (3)	[0119] 24 (3)	[0120] 2002
[0121] ResMed Mirage Micro™	[0122] nasal	[0123] 30 (3)	[0124] 22 (3)	[0125] 2008

[0126] Res Med Mirage™ SoftGel	[0127] nasal	[0128] 29 (3)	[0129] 22 (3)	[0130] 2008
[0131] Res Med Mirage™ FX	[0132] nasal	[0133] 26 (3)	[0134] 18 (3)	[0135] 2010
[0136] Res Med Mirage Swift™ (*)	[0137] nasal pillows	[0138] 37	[0139] 29	[0140] 2004
[0141] Res Med Mirage Swift™ II	[0142] nasal pillows	[0143] 28 (3)	[0144] 20 (3)	[0145] 2005
[0146] Res Med Mirage Swift™ LT	[0147] nasal pillows	[0148] 25 (3)	[0149] 17 (3)	[0150] 2008
[0151] Res Med AirFit P10	[0152] nasal pillows	[0153] 21 (3)	[0154] 13 (3)	[0155] 2014

[0156]

[0157] (* one specimen only, measured using test method specified in ISO 3744 in CPAP mode at 10 cmH_2O)

[0158] Sound pressure values of a variety of objects are listed below

[0159] Object	[0160] A-weighted sound pressure dB(A)	[0161] Notes
[0162] Vacuum cleaner: Nilfisk Walter Broadly Litter Hog: B+ Grade	[0163] 68	[0164] ISO 3744 at 1m distance

[0165] Conversational speech	[0166] 60	[0167] 1m distance
[0168] Average home	[0169] 50	[0170]
[0171] Quiet library	[0172] 40	[0173]
[0174] Quiet bedroom at night	[0175] 30	[0176]
[0177] Background in TV studio	[0178] 20	[0179]

2.2.4 Screening, Diagnosis, and Monitoring Systems

[0180] Polysomnography (PSG) is a conventional system for diagnosis and monitoring of cardio-pulmonary disorders, and typically involves expert clinical staff to apply the system. PSG typically involves the placement of 15 to 20 contact sensors on a patient in order to record various bodily signals such as electroencephalography (EEG), electrocardiography (ECG), electrooculograpy (EOG), electromyography (EMG), etc. PSG for sleep disordered breathing has involved two nights of observation of a patient in a clinic, one night of pure diagnosis and a second night of titration of treatment parameters by a clinician. PSG is therefore expensive and inconvenient. In particular it is unsuitable for home screening / diagnosis / monitoring of sleep disordered breathing.

[0181] Screening and diagnosis generally describe the identification of a condition from its signs and symptoms. Screening typically gives a true / false result indicating whether or not a patient's SDB is severe enough to warrant further investigation, while diagnosis may result in clinically actionable information. Screening and diagnosis tend to be one-off processes, whereas monitoring the progress of a condition can continue indefinitely. Some screening / diagnosis systems are suitable only for screening / diagnosis, whereas some may also be used for monitoring.

[0182] Clinical experts may be able to screen, diagnose, or monitor patients adequately based on visual observation of PSG signals. However, there are circumstances where a clinical expert may not be available, or a clinical expert may not be affordable. Different clinical experts may disagree on a patient's condition. In addition, a given clinical expert may apply a different standard at different times.

3 BRIEF SUMMARY OF THE TECHNOLOGY

[0183] The present technology is directed towards providing medical devices used in the screening, diagnosis, monitoring, amelioration, treatment, or prevention of respiratory disorders having one or more of improved comfort, cost, efficacy, ease of use and manufacturability.

[0184] A first aspect of the present technology relates to apparatus used in the screening, diagnosis, monitoring, amelioration, treatment or prevention of a respiratory disorder.

[0185] Another aspect of the present technology relates to methods used in the screening, diagnosis, monitoring, amelioration, treatment or prevention of a respiratory disorder.

[0186] An aspect of certain forms of the present technology is to provide methods and/or apparatus that improve the compliance of patients with respiratory therapy.

[0187] An aspect of the present technology is directed to a patient interface that includes: a plenum chamber at least partly forming a patient interface chamber that is pressurisable to a therapeutic pressure of at least 6 cmH_2O above ambient air pressure, a seal-forming structure constructed and arranged to form a seal with a region of the patient's face surrounding an entrance to the patient's airways, a first conduit and a second conduit each being sized and structured to receive the flow of air at the therapeutic pressure for breathing by the patient, a first conduit connector configured to pneumatically connect the first conduit to the plenum chamber to provide the flow of air at the therapeutic pressure to the patient interface chamber for breathing by the patient and a second conduit connector configured to pneumatically connect the second conduit to the plenum chamber to provide the flow of air at the therapeutic pressure to the patient interface chamber for breathing by the patient, a positioning

and stabilising structure to provide a force to hold the seal-forming structure in a therapeutically effective position on the patient's head, the positioning and stabilising structure comprising at least one tie, and at least one anti-asphyxia valve that is configured to allow the patient to breath from ambient through their mouth in the absence of a flow of pressurised air. In a further example, at least one of the first conduit connector and the second conduit connector may include an anti-asphyxia valve.

[0188] An aspect of the present technology is directed to a patient interface that includes: a plenum chamber at least partly forming a patient interface chamber that is pressurisable to a therapeutic pressure of at least 6 cmH_2O above ambient air pressure, the plenum chamber including a first plenum chamber hole and a second plenum chamber hole, the first plenum chamber hole and the second plenum chamber hole each being sized and structured to receive a flow of air at the therapeutic pressure for breathing by a patient, a seal-forming structure constructed and arranged to form a seal with a region of the patient's face surrounding an entrance to the patient's airways, said seal-forming structure having at least one hole therein such that the flow of air at the therapeutic pressure is delivered to at least an entrance to the patient's nares, the seal-forming structure constructed and arranged to maintain the therapeutic pressure in the patient interface chamber throughout the patient's respiratory cycle in use; a first conduit and a second conduit each being sized and structured to receive the flow of air at the therapeutic pressure for breathing by the patient; a first conduit connector configured to pneumatically connect the first conduit to the first plenum chamber hole to provide the flow of air at the therapeutic pressure to the patient interface chamber for breathing by the patient and a second conduit connector configured to pneumatically connect the second conduit to the second plenum chamber hole to provide the flow of air at the therapeutic pressure to the patient interface chamber for breathing by the patient; and a positioning and stabilising structure to provide a force to hold the seal-forming structure in a therapeutically effective position on the patient's head, the positioning and stabilising structure comprising at least one tie, wherein the first conduit connector and the second conduit connector each includes an anti-asphyxia valve that is configured to allow the patient to breath from ambient through their mouth in the absence of a flow of pressurised air through the first plenum chamber hole and the second plenum chamber hole.

[0189] In examples, (a) the anti-asphyxia valve in each of the first conduit connector and the second conduit connector may include an anti-asphyxia valve hole, (b) each anti-asphyxia valve hole may be shaped and dimensioned to allow the patient to breathe therethrough if the other anti-asphyxia valve hole is occluded, (c) the anti-asphyxia valve in each of the first conduit connector and the second conduit connector further may comprise an anti-asphyxia valve flap, (d) the anti-asphyxia valve flap of each of the first conduit connector and the second conduit connector may be configured to occlude the anti-asphyxia valve hole of a corresponding one of the first conduit connector and the second conduit connector in a closed position such that the flow of air at the therapeutic pressure traveling through a corresponding one of the first conduit connector and the second conduit connector is directed to the patient interface chamber and prevented from escaping to atmosphere via the anti-asphyxia valve hole, (e) in an open position, the anti-asphyxia valve flap of each of the first conduit connector and the second conduit connector may be configured to allow the patient to breath from ambient through their mouth via the anti-asphyxia valve hole of a corresponding one of the first conduit connector and the second conduit connector in the absence of a flow of pressurised air through the first plenum chamber hole and the second plenum chamber hole, (f) the anti-asphyxia valve hole of each of the first conduit connector and the second conduit connector may be divided by an anti-asphyxia valve hole divider that prevents the corresponding anti-asphyxia valve flap from passing through the anti-asphyxia valve hole, (g) each anti-asphyxia valve flap may comprise at least one vent hole to allow a portion of the flow of air at the therapeutic pressure to escape to atmosphere therethrough, (h) the anti-asphyxia valve of each of the first conduit connector and the second conduit connector may comprise an anti-asphyxia valve flap connector hole, and the anti-asphyxia valve flap of each of the first conduit connector and the second conduit connector may comprise an anti-asphyxia valve flap connector to connect the anti-asphyxia valve flap to the anti-asphyxia valve flap connector hole the anti-asphyxia valve of a corresponding one of the first conduit connector and the second conduit connector, (i) the anti-asphyxia valve of each of the first conduit connector and the second conduit connector may be configured to operate independently of the other, (j) each of the first conduit connector and the second conduit connector may comprise at least one conduit connector vent hole that is configured to allow a continuous flow of gases exhaled by the patient from an interior of the patient interface chamber to ambient, the at least

one conduit connector vent hole being sized and shaped to maintain the therapeutic pressure in the patient interface chamber in use, (k) each of the first conduit connector and the second conduit connector may comprise a conduit connector vent inlet that is configured to direct the continuous flow of gases exhaled by the patient from the interior of the patient interface chamber to the at least one conduit connector vent hole, (l) each of the first conduit connector and the second conduit connector may comprise a conduit connector vent outlet that is configured to direct the continuous flow of gases exhaled by the patient from the at least one conduit connector vent hole to atmosphere, (m) each of the first conduit connector and the second conduit connector may comprise a baffle to prevent the flow of air at the therapeutic pressure passing through each of the first conduit connector and the second conduit connector from passing directly to atmosphere via the at least one conduit connector vent hole, (n) each of the first conduit connector and the second conduit connector may comprise a diffuser cavity containing a diffuser material, (o) the diffuser cavity and the diffuser material may be positioned downstream of the at least one conduit connector vent hole relative to the continuous flow of gases to diffuse the continuous flow of gases before escaping to atmosphere, (p) each of the first conduit connector and the second conduit connector may comprise a diffuser cover that encloses the diffuser material within the diffuser cavity, (q) the diffuser cover may be removable to allow removal and replacement of the diffuser material, (r) each of the first conduit connector and the second conduit connector may comprise a conduit connector vent outlet that is positioned such that at least a portion of the continuous flow of gases passes through the diffuser material before escaping to atmosphere via the conduit connector vent outlet, (s) each of the first conduit connector and the second conduit connector may comprise a conduit connector spacer to maintain a gap between a portion of each of the first conduit connector and the second conduit connector and the plenum chamber to allow the continuous flow of gases to escape from each of the first conduit connector and the second conduit connector to atmosphere, (t) the plenum chamber may comprise at least one plenum chamber vent hole, (u) the plenum chamber may comprise a plurality of plenum chamber vent holes, (v) each of the first conduit connector and the second conduit connector may comprise a conduit connection end that is configured to be connected to a corresponding one of the first conduit and the second conduit, (w) each of the first conduit connector and the second conduit connector may comprise a conduit connector end that defines a conduit

connector inlet hole that is configured to receive the flow of air at the therapeutic pressure from a corresponding one of the first conduit and the second conduit, (x) each of the first conduit connector and the second conduit connector may comprise a conduit connector outlet that defines a conduit connector outlet hole that is configured to direct the flow of air at the therapeutic pressure into the patient interface chamber, (y) each conduit connector end may be oriented substantially orthogonally to a corresponding conduit connector outlet, (z) the plenum chamber may comprise a connection rim at a corresponding one of the first plenum chamber hole and the second plenum chamber hole, and each of the first conduit connector and the second conduit connector may comprise at least one conduit connector attachment structure that is configured to connect to the connection rim at a corresponding one of the first plenum chamber hole and the second plenum chamber hole, (aa) each of the first conduit connector and the second conduit connector may be removable from the plenum chamber, (bb) each of the first conduit connector and the second conduit connector may be permanently connected to the plenum chamber, (cc) each of the first conduit connector and the second conduit connector is configured to remain stationary when connected to the plenum chamber, (dd) the patient interface may further comprise a seal between each of the first conduit connector and the second conduit connector and a corresponding one of the first plenum chamber hole and the second plenum chamber hole, (ee) the seal may be formed on each of the first conduit connector and the second conduit connector, the seal being configured to engage the plenum chamber at a corresponding one of the first plenum chamber hole and the second plenum chamber hole, (ff) the seal may be permanently joined to a corresponding one of the first conduit connector and the second conduit connector, (gg) the seal may be constructed of silicone, (hh) the positioning and stabilising structure may comprise a pair of superior ties, each of the superior ties being constructed and arranged so that at least a portion of the superior tie overlies a corresponding lateral region of the patient's head superior to an otobasion superior of the patient's head in use, and the positioning and stabilising structure may comprises a pair of inferior ties, each of the inferior ties being constructed and arranged so that at least a portion of the inferior tie overlies a corresponding lateral region of the patient's head inferior to an otobasion inferior of the patient's head in use, (ii) each of the first conduit connector and the second conduit connector may comprise an inferior tie connector that is configured to be connected to a corresponding one of the inferior

ties, (jj) a clip may releasably connect each of the inferior ties to a corresponding one of the inferior tie connectors, (kk) the clip may comprise a magnet, (ll) the patient interface may further comprise a pair of inferior tie tabs each configured to be connected to a corresponding one of the inferior ties, and each of the first conduit connector and the second conduit connector may further comprise a flange configured to be connected a corresponding one of the inferior tie tabs, (mm) each of the flanges may further comprise a flange opening and a recess, each of the inferior tie tabs may further comprise a tab connector configured to join each of the inferior tie tabs to a corresponding one of the flanges by passing through the corresponding flange opening and engaging the corresponding recess, (nn) the patient interface may further comprise a clip configured to be connected to each of the inferior ties, each of the inferior tie tabs may further comprise a clip receiver configured to be removably connected to a corresponding one of the clips to connect the inferior ties, (oo) each of the clips and each of the clip receivers may comprise a magnet oriented and charged to facilitate a removable connection, (pp) each of the clip receivers may comprise a notch and each of the clips comprise a protrusion, each protrusion being configured to engage a corresponding notch to limit rotation of the clip relative to the corresponding clip receiver, (qq) each of the first conduit connector and the second conduit connector may further comprise a first tab and a second tab to releasably connect the first conduit connector and the second conduit connector to the plenum chamber at the first plenum chamber hole and the second plenum chamber hole, respectively, (rr) the first tab and the second tab may be configured such that the first conduit connector and the second conduit connector are only connectable to the plenum chamber by engaging the first tab with the plenum chamber followed by engaging the second tab with the plenum chamber, (ss) the first tab and the second tab may be configured such that the first conduit connector and the second conduit connector are only disconnectable from the plenum chamber by disengaging the second tab from the plenum chamber followed by disengaging the first tab from the plenum chamber, (tt) the plenum chamber may further comprises a slot proximal to each of the first plenum chamber hole and the second plenum chamber hole, the first tab of each of the first conduit connector and the second conduit connector may be configured to engage the slot associated with a corresponding one of the first plenum chamber hole and the second plenum chamber hole, and each of the first conduit connector and the second conduit connector may be rotatable about the corresponding slot when the first tab of

each of the first conduit connector and the second conduit connector is engaged with the corresponding slot, (uu) the plenum chamber may further comprises a detent proximal to each of the first plenum chamber hole and the second plenum chamber hole, and the second tab of each of the first conduit connector and the second conduit connector may further comprise a catch, the catch being configured to engage the detent associated with a corresponding one of the first plenum chamber hole and the second plenum chamber hole with a snap-fit, (vv) the second tab of each of the first conduit connector and the second conduit connector may be flexible, (ww) each of the first conduit connector and the second conduit connector may further comprise a gap on each side of the corresponding second tab such that the second tab is cantilevered from each of the first conduit connector and the second conduit connector (xx) the seal-forming structure may comprise a nasal portion configured to seal around the patient's nares and an oral portion configured to seal around the patient's mouth, (yy) the seal-forming structure may comprise a nasal portion hole configured to provide pneumatic communication between the patient's nares and the patient interface chamber, and the seal-forming structure may comprise an oral portion hole configured to provide pneumatic communication between the patient's mouth and the patient interface chamber, (zz) the patient interface may comprise a connection port housing, each of the first conduit and the second conduit in pneumatic communication with the connection port housing, and a connection port connected to the connection port housing, the connection port configured to be connected to an air circuit to receive the flow of air at the therapeutic pressure, (aaa) the connection port may comprise an elbow, (bbb) the connection port may comprise at least one vent hole, (ccc) the connection port may be swivelably connected to the connection port housing, and/or (ddd) the connection port and the connection port housing may be configured to be positioned superior to the patient's head in use.

[0190] Another aspect of the present technology is directed to a respiratory therapy system that may comprise: the patient interface according to any of the examples of the three preceding paragraphs; a respiratory pressure therapy device configured to generate the flow of air at the therapeutic pressure; and an air circuit configured to direct the flow of air at the therapeutic pressure from the respiratory pressure therapy device to the patient interface.

[0191] Another aspect of one form of the present technology is a patient interface that is moulded or otherwise constructed with a perimeter shape which is complementary to that of an intended wearer.

[0192] An aspect of one form of the present technology is a method of manufacturing apparatus.

[0193] An aspect of certain forms of the present technology is a medical device that is easy to use, e.g. by a person who does not have medical training, by a person who has limited dexterity, vision or by a person with limited experience in using this type of medical device.

[0194] An aspect of one form of the present technology is a portable RPT device that may be carried by a person, e.g., around the home of the person.

[0195] An aspect of one form of the present technology is a patient interface that may be washed in a home of a patient, e.g., in soapy water, without requiring specialised cleaning equipment. An aspect of one form of the present technology is a humidifier tank that may be washed in a home of a patient, e.g., in soapy water, without requiring specialised cleaning equipment.

[0196] The methods, systems, devices and apparatus described may be implemented so as to improve the functionality of a processor, such as a processor of a specific purpose computer, respiratory monitor and/or a respiratory therapy apparatus. Moreover, the described methods, systems, devices and apparatus can provide improvements in the technological field of automated management, monitoring and/or treatment of respiratory conditions, including, for example, sleep disordered breathing.

[0197] Of course, portions of the aspects may form sub-aspects of the present technology. Also, various ones of the sub-aspects and/or aspects may be combined in various manners and also constitute additional aspects or sub-aspects of the present technology.

[0198] Other features of the technology will be apparent from consideration of the information contained in the following detailed description, abstract, drawings and claims.

4 BRIEF DESCRIPTION OF THE DRAWINGS

[0199] The present technology is illustrated by way of example, and not by way of limitation, in the figures of the accompanying drawings, in which like reference numerals refer to similar elements including:

4.1 TREATMENT SYSTEMS

[0200] Fig. 1A shows a system including a patient 1000 wearing a patient interface 3000, in the form of nasal pillows, receiving a supply of air at positive pressure from an RPT device 4000. Air from the RPT device 4000 is humidified in a humidifier 5000, and passes along an air circuit 4170 to the patient 1000. A bed partner 1100 is also shown. The patient is sleeping in a supine sleeping position.

[0201] Fig. 1B shows a system including a patient 1000 wearing a patient interface 3000, in the form of a nasal mask, receiving a supply of air at positive pressure from an RPT device 4000. Air from the RPT device is humidified in a humidifier 5000, and passes along an air circuit 4170 to the patient 1000.

[0202] Fig. 1C shows a system including a patient 1000 wearing a patient interface 3000, in the form of a full-face mask, receiving a supply of air at positive pressure from an RPT device 4000. Air from the RPT device is humidified in a humidifier 5000, and passes along an air circuit 4170 to the patient 1000. The patient is sleeping in a side sleeping position.

4.2 RESPIRATORY SYSTEM AND FACIAL ANATOMY

[0203] Fig. 2A shows an overview of a human respiratory system including the nasal and oral cavities, the larynx, vocal folds, oesophagus, trachea, bronchus, lung, alveolar sacs, heart and diaphragm.

[0204] Fig. 2B shows a view of a human upper airway including the nasal cavity, nasal bone, lateral nasal cartilage, greater alar cartilage, nostril, lip superior, lip

inferior, larynx, hard palate, soft palate, oropharynx, tongue, epiglottis, vocal folds, oesophagus and trachea.

[0205] Fig. 2C is a front view of a face with several features of surface anatomy identified including the lip superior, upper vermilion, lower vermilion, lip inferior, mouth width, endocanthion, a nasal ala, nasolabial sulcus and cheilion. Also indicated are the directions superior, inferior, radially inward and radially outward.

[0206] Fig. 2D is a side view of a head with several features of surface anatomy identified including glabella, sellion, pronasale, subnasale, lip superior, lip inferior, supramenton, nasal ridge, alar crest point, otobasion superior and otobasion inferior. Also indicated are the directions superior & inferior, and anterior & posterior.

[0207] Fig. 2E is a further side view of a head. The approximate locations of the Frankfort horizontal and nasolabial angle are indicated. The coronal plane is also indicated.

[0208] Fig. 2F shows a base view of a nose with several features identified including naso-labial sulcus, lip inferior, upper Vermilion, naris, subnasale, columella, pronasale, the major axis of a naris and the midsagittal plane.

[0209] Fig. 2G shows a side view of the superficial features of a nose.

[0210] Fig. 2H shows subcutaneal structures of the nose, including lateral cartilage, septum cartilage, greater alar cartilage, lesser alar cartilage, sesamoid cartilage, nasal bone, epidermis, adipose tissue, frontal process of the maxilla and fibrofatty tissue.

[0211] Fig. 2I shows a medial dissection of a nose, approximately several millimeters from the midsagittal plane, amongst other things showing the septum cartilage and medial crus of greater alar cartilage.

[0212] Fig. 2J shows a front view of the bones of a skull including the frontal, nasal and zygomatic bones. Nasal concha are indicated, as are the maxilla, and mandible.

[0213] Fig. 2K shows a lateral view of a skull with the outline of the surface of a head, as well as several muscles. The following bones are shown: frontal, sphenoid, nasal, zygomatic, maxilla, mandible, parietal, temporal and occipital. The mental protuberance is indicated. The following muscles are shown: digastricus, masseter, sternocleidomastoid and trapezius.

[0214] Fig. 2L shows an anterolateral view of a nose.

4.3 PATIENT INTERFACE

[0215] Fig. 3A shows a patient interface in the form of a nasal mask in accordance with one form of the present technology.

[0216] Fig. 3B shows a schematic of a cross-section through a structure at a point. An outward normal at the point is indicated. The curvature at the point has a positive sign, and a relatively large magnitude when compared to the magnitude of the curvature shown in Fig. 3C.

[0217] Fig. 3C shows a schematic of a cross-section through a structure at a point. An outward normal at the point is indicated. The curvature at the point has a positive sign, and a relatively small magnitude when compared to the magnitude of the curvature shown in Fig. 3B.

[0218] Fig. 3D shows a schematic of a cross-section through a structure at a point. An outward normal at the point is indicated. The curvature at the point has a value of zero.

[0219] Fig. 3E shows a schematic of a cross-section through a structure at a point. An outward normal at the point is indicated. The curvature at the point has a negative sign, and a relatively small magnitude when compared to the magnitude of the curvature shown in Fig. 3F.

[0220] Fig. 3F shows a schematic of a cross-section through a structure at a point. An outward normal at the point is indicated. The curvature at the point has a negative sign, and a relatively large magnitude when compared to the magnitude of the curvature shown in Fig. 3E.

[0221] Fig. 3G shows a cushion for a mask that includes two pillows. An exterior surface of the cushion is indicated. An edge of the surface is indicated. Dome and saddle regions are indicated.

[0222] Fig. 3H shows a cushion for a mask. An exterior surface of the cushion is indicated. An edge of the surface is indicated. A path on the surface between points A and B is indicated. A straight line distance between A and B is indicated. Two saddle regions and a dome region are indicated.

[0223] Fig. 3I shows the surface of a structure, with a one dimensional hole in the surface. The illustrated plane curve forms the boundary of a one dimensional hole.

[0224] Fig. 3J shows a cross-section through the structure of Fig.3I. The illustrated surface bounds a two dimensional hole in the structure of Fig. 3I.

[0225] Fig. 3K shows a perspective view of the structure of Fig. 3I, including the two dimensional hole and the one dimensional hole. Also shown is the surface that bounds a two dimensional hole in the structure of Fig. 3I.

[0226] Fig. 3L shows a mask having an inflatable bladder as a cushion.

[0227] Fig. 3M shows a cross-section through the mask of Fig. 3L, and shows the interior surface of the bladder. The interior surface bounds the two dimensional hole in the mask.

[0228] Fig. 3N shows a further cross-section through the mask of Fig. 3L. The interior surface is also indicated.

[0229] Fig. 3O illustrates a left-hand rule.

[0230] Fig. 3P illustrates a right-hand rule.

[0231] Fig. 3Q shows a left ear, including the left ear helix.

[0232] Fig. 3R shows a right ear, including the right ear helix.

[0233] Fig. 3S shows a right-hand helix.

[0234] Fig. 3T shows a view of a mask, including the sign of the torsion of the space curve defined by the edge of the sealing membrane in different regions of the mask.

[0235] Fig. 3U shows a view of a plenum chamber 3200 showing a sagittal plane and a mid-contact plane.

[0236] Fig. 3V shows a view of a posterior of the plenum chamber of Fig. 3U. The direction of the view is normal to the mid-contact plane. The sagittal plane in Fig. 3V bisects the plenum chamber into left-hand and right-hand sides.

[0237] Fig. 3W shows a cross-section through the plenum chamber of Fig. 3V, the cross-section being taken at the sagittal plane shown in Fig. 3V. A 'mid-contact' plane is shown. The mid-contact plane is perpendicular to the sagittal plane. The orientation of the mid-contact plane corresponds to the orientation of a chord 3210 which lies on the sagittal plane and just touches the cushion of the plenum chamber at two points on the sagittal plane: a superior point 3220 and an inferior point 3230. Depending on the geometry of the cushion in this region, the mid-contact plane may be a tangent at both the superior and inferior points.

[0238] Fig. 3X shows the plenum chamber 3200 of Fig. 3U in position for use on a face. The sagittal plane of the plenum chamber 3200 generally coincides with the midsagittal plane of the face when the plenum chamber is in position for use. The mid-contact plane corresponds generally to the 'plane of the face' when the plenum chamber is in position for use. In Fig. 3X the plenum chamber 3200 is that of a nasal mask, and the superior point 3220 sits approximately on the sellion, while the inferior point 3230 sits on the lip superior.

4.4 RPT DEVICE

[0239] Fig. 4A shows an RPT device in accordance with one form of the present technology.

[0240] Fig. 4B is a schematic diagram of the pneumatic path of an RPT device in accordance with one form of the present technology. The directions of upstream and downstream are indicated with reference to the blower and the patient interface. The blower is defined to be upstream of the patient interface and the patient interface is

defined to be downstream of the blower, regardless of the actual flow direction at any particular moment. Items which are located within the pneumatic path between the blower and the patient interface are downstream of the blower and upstream of the patient interface.

[0241] Fig. 4C is a schematic diagram of the electrical components of an RPT device in accordance with one form of the present technology.

4.5 HUMIDIFIER

[0242] Fig. 5A shows an isometric view of a humidifier in accordance with one form of the present technology.

[0243] Fig. 5B shows an isometric view of a humidifier in accordance with one form of the present technology, showing a humidifier reservoir 5110 removed from the humidifier reservoir dock 5130.

[0244] Fig. 5C shows a schematic of a humidifier in accordance with one form of the present technology.

4.6 BREATHING WAVEFORMS

[0245] Fig. 6 shows a model typical breath waveform of a person while sleeping.

4.7 EXAMPLES OF THE PRESENT TECHNOLOGY

[0246] FIG. 7 depicts an anterior perspective view of a patient interface according to an example of the present technology.

[0247] FIG. 8 depicts a posterior perspective view of a patient interface according to an example of the present technology.

[0248] FIG. 9 depicts an inferior view of a patient interface according to an example of the present technology.

[0249] FIG. 10 depicts an anterior view of a patient interface according to an example of the present technology.

[0250] FIG. 11 depicts a posterior view of a patient interface according to an example of the present technology.

[0251] FIG. 12 depicts a cross-sectional view of a patient interface according to an example of the present technology taken through line 12-12 of FIG. 11.

[0252] FIG. 13 depicts a lateral view of a patient interface according to an example of the present technology.

[0253] FIG. 14 depicts a cross-sectional view of a patient interface according to an example of the present technology taken through line 14, 15-14, 15 of FIG. 13.

[0254] FIG. 15 depicts a cross-sectional view of a patient interface according to an example of the present technology taken through line 14, 15-14, 15 of FIG. 13.

[0255] FIG. 16 depicts an anterior perspective view of a patient interface according to an example of the present technology.

[0256] FIG. 17 depicts a posterior perspective view of a patient interface according to an example of the present technology.

[0257] FIG. 18 depicts a superior view of a patient interface according to an example of the present technology.

[0258] FIG. 19 depicts an anterior perspective view of a sub-assembly of a patient interface according to an example of the present technology.

[0259] FIG. 20 depicts an anterior view of a sub-assembly of a patient interface according to an example of the present technology.

[0260] FIG. 21 depicts a posterior perspective view of a sub-assembly of a patient interface according to an example of the present technology.

[0261] FIG. 22 depicts a posterior view of a sub-assembly of a patient interface according to an example of the present technology.

[0262] FIG. 23 depicts a cross-sectional view of a sub-assembly of a patient interface according to an example of the present technology taken through line 23-23 of FIG. 22.

[0263] FIG. 24 depicts a lateral view of a sub-assembly of a patient interface according to an example of the present technology.

[0264] FIG. 25 depicts an anterior perspective view of a conduit connector for a patient interface according to an example of the present technology.

[0265] FIG. 26 depicts a posterior perspective view of a conduit connector for a patient interface according to an example of the present technology.

[0266] FIG. 27 depicts a lateral perspective view of a conduit connector for a patient interface according to an example of the present technology.

[0267] FIG. 28 depicts a superior view of a conduit connector for a patient interface according to an example of the present technology.

[0268] FIG. 29 depicts a cross-sectional view of a conduit connector for a patient interface according to an example of the present technology taken through line 29, 30 – 29, 30 of FIG. 28.

[0269] FIG. 30 depicts a cross-sectional view of a conduit connector for a patient interface according to an example of the present technology taken through line 29, 30 – 29, 30 of FIG. 28.

[0270] FIG. 31 depicts an anterior perspective view of a conduit connector for a patient interface according to an example of the present technology.

[0271] FIG. 32 depicts an anterior perspective view of a patient interface according to an example of the present technology.

[0272] FIG. 33 depicts an anterior view of a patient interface according to an example of the present technology.

[0273] FIG. 34 depicts an anterior perspective view of a patient interface according to an example of the present technology worn by a patient.

[0274] FIG. 35 depicts a lateral view of a patient interface according to an example of the present technology worn by a patient.

[0275] FIG. 36 depicts an anterior perspective view of a patient interface according to an example of the present technology worn by a patient.

[0276] FIG. 37 depicts a superior perspective view of a connection port for a patient interface according to an example of the present technology.

[0277] FIG. 38 depicts an inferior perspective view of a connection port for a patient interface according to an example of the present technology.

[0278] FIG. 39 depicts an anterior perspective view of a patient interface according to an example of the present technology.

[0279] FIG. 40 depicts a posterior perspective view of a patient interface according to an example of the present technology.

[0280] FIG. 41 depicts an inferior view of a patient interface according to an example of the present technology.

[0281] FIG. 42 depicts an anterior view of a patient interface according to an example of the present technology.

[0282] FIG. 43 depicts a posterior view of a patient interface according to an example of the present technology.

[0283] FIG. 44 depicts a cross-sectional view of a patient interface according to an example of the present technology taken through line 44-44 of FIG. 43.

[0284] FIG. 45 depicts a lateral view of a patient interface according to an example of the present technology.

[0285] FIG. 46 depicts a cross-sectional view of a patient interface according to an example of the present technology taken through line 46, 47-46, 47 of FIG. 45.

[0286] FIG. 47 depicts a cross-sectional view of a patient interface according to an example of the present technology taken through line 46, 47-46, 47 of FIG. 45.

[0287] FIG. 48 depicts an anterior perspective view of a patient interface according to an example of the present technology.

[0288] FIG. 49 depicts a posterior perspective view of a patient interface according to an example of the present technology.

[0289] FIG. 50 depicts a superior view of a patient interface according to an example of the present technology.

[0290] FIG. 51 depicts an anterior perspective view of a sub-assembly of a patient interface according to an example of the present technology.

[0291] FIG. 52 depicts an anterior view of a sub-assembly of a patient interface according to an example of the present technology.

[0292] FIG. 53 depicts a posterior perspective view of a sub-assembly of a patient interface according to an example of the present technology.

[0293] FIG. 54 depicts a posterior view of a sub-assembly of a patient interface according to an example of the present technology.

[0294] FIG. 55 depicts a cross-sectional view of a sub-assembly of a patient interface according to an example of the present technology taken through line 55-55 of FIG. 54.

[0295] FIG. 56 depicts a posterior perspective view of a conduit connector for a patient interface according to an example of the present technology.

[0296] FIG. 57 depicts an exploded posterior perspective view of a conduit connector for a patient interface according to an example of the present technology.

[0297] FIG. 58 depicts an exploded anterior perspective view of a conduit connector for a patient interface according to an example of the present technology.

[0298] FIG. 59 depicts a superior view of a conduit connector for a patient interface according to an example of the present technology.

[0299] FIG. 60 depicts a cross-sectional view of a conduit connector for a patient interface according to an example of the present technology taken through line 59, 60 – 59, 60 of FIG. 58.

[0300] FIG. 61 depicts a cross-sectional view of a conduit connector for a patient interface according to an example of the present technology taken through line 59, 60 – 59, 60 of FIG. 58.

[0301] FIG. 62 depicts an anterior perspective view of a conduit connector for a patient interface according to an example of the present technology.

[0302] FIG. 63 depicts another cross-sectional view of a conduit connector for a patient interface joined to a conduit according to an example of the present technology.

[0303] FIG. 64 depicts an anterior view of a patient interface according to an example of the present technology.

[0304] FIG. 65 depicts an anterior perspective view of a patient interface according to an example of the present technology.

[0305] FIG. 66 depicts a posterior view of a positioning and stabilising structure according to an example of the present technology.

[0306] FIG. 67 depicts a perspective view of a clip according to an example of the present technology.

[0307] FIG. 68 depicts a perspective view of a clip according to an example of the present technology.

5 DETAILED DESCRIPTION OF EXAMPLES OF THE TECHNOLOGY

[0308] Before the present technology is described in further detail, it is to be understood that the technology is not limited to the particular examples described herein, which may vary. It is also to be understood that the terminology used in this disclosure is for the purpose of describing only the particular examples discussed herein, and is not intended to be limiting.

[0309] The following description is provided in relation to various examples which may share one or more common characteristics and/or features. It is to be understood that one or more features of any one example may be combinable with one or more features of another example or other examples. In addition, any single feature or combination of features in any of the examples may constitute a further example.

5.1 THERAPY

[0310] In one form, the present technology comprises a method for treating a respiratory disorder comprising the step of applying positive pressure to the entrance of the airways of a patient 1000.

[0311] In certain examples of the present technology, a supply of air at positive pressure is provided to the nasal passages of the patient via one or both nares.

[0312] In certain examples of the present technology, mouth breathing is limited, restricted or prevented.

5.2 TREATMENT SYSTEMS

[0313] In one form, the present technology comprises an apparatus or device for treating a respiratory disorder. The apparatus or device may comprise an RPT device 4000 for supplying pressurised air to the patient 1000 via an air circuit 4170 to a patient interface 3000.

5.3 PATIENT INTERFACE

[0314] A non-invasive patient interface 3000 in accordance with one aspect of the present technology comprises the following functional aspects: a seal-forming structure 3100, a plenum chamber 3200, a positioning and stabilising structure 3300, a vent 3400, one form of connection port 3600 for connection to air circuit 4170, and a forehead support 3700. In some forms a functional aspect may be provided by one or more physical components. In some forms, one physical component may provide one or more functional aspects. In use the seal-forming structure 3100 is arranged to surround an entrance to the airways of the patient so as to facilitate the supply of air at positive pressure to the airways.

[0315] If a patient interface is unable to comfortably deliver a minimum level of positive pressure to the airways, the patient interface may be unsuitable for respiratory pressure therapy.

[0316] The patient interface 3000 in accordance with one form of the present technology is constructed and arranged to be able to provide a supply of air at a positive pressure of at least 6 cmH_2O with respect to ambient.

[0317] The patient interface 3000 in accordance with one form of the present technology is constructed and arranged to be able to provide a supply of air at a positive pressure of at least 10 cmH_2O with respect to ambient.

[0318] The patient interface 3000 in accordance with one form of the present technology is constructed and arranged to be able to provide a supply of air at a positive pressure of at least 20 cmH_2O with respect to ambient.

5.3.1 Seal-forming structure

[0319] In one form of the present technology, a seal-forming structure 3100 provides a target seal-forming region, and may additionally provide a cushioning function. The target seal-forming region is a region on the seal-forming structure 3100 where sealing may occur. The region where sealing actually occurs- the actual sealing surface- may change within a given treatment session, from day to day, and from patient to patient, depending on a range of factors including for example, where the patient interface was placed on the face, tension in the positioning and stabilising structure and the shape of a patient's face.

[0320] In one form the target seal-forming region is located on an outside surface of the seal-forming structure 3100.

[0321] In certain forms of the present technology, the seal-forming structure 3100 is constructed from a biocompatible material, e.g. silicone rubber.

[0322] A seal-forming structure 3100 in accordance with the present technology may be constructed from a soft, flexible, resilient material such as silicone.

[0323] In certain forms of the present technology, a system is provided comprising more than one a seal-forming structure 3100, each being configured to correspond to a different size and/or shape range. For example the system may comprise one form of a seal-forming structure 3100 suitable for a large sized head, but not a small sized head and another suitable for a small sized head, but not a large sized head.

5.3.1.1 Sealing mechanisms

[0324] In one form, the seal-forming structure includes a sealing flange utilizing a pressure assisted sealing mechanism. In use, the sealing flange can readily respond to a system positive pressure in the interior of the plenum chamber 3200 acting on its underside to urge it into tight sealing engagement with the face. The pressure assisted mechanism may act in conjunction with elastic tension in the positioning and stabilising structure.

[0325] In one form, the seal-forming structure 3100 comprises a sealing flange and a support flange. The sealing flange comprises a relatively thin member with a thickness of less than about 1mm, for example about 0.25mm to about 0.45mm, which extends around the perimeter of the plenum chamber 3200. Support flange may be relatively thicker than the sealing flange. The support flange is disposed between the sealing flange and the marginal edge of the plenum chamber 3200, and extends at least part of the way around the perimeter. The support flange is or includes a spring-like element and functions to support the sealing flange from buckling in use.

[0326] In one form, the seal-forming structure may comprise a compression sealing portion or a gasket sealing portion. In use the compression sealing portion, or the gasket sealing portion is constructed and arranged to be in compression, e.g. as a result of elastic tension in the positioning and stabilising structure.

[0327] In one form, the seal-forming structure comprises a tension portion. In use, the tension portion is held in tension, e.g. by adjacent regions of the sealing flange.

[0328] In one form, the seal-forming structure comprises a region having a tacky or adhesive surface.

[0329] In certain forms of the present technology, a seal-forming structure may comprise one or more of a pressure-assisted sealing flange, a compression sealing portion, a gasket sealing portion, a tension portion, and a portion having a tacky or adhesive surface.

5.3.1.2 Nose bridge or nose ridge region

[0330] In one form, the non-invasive patient interface 3000 comprises a seal-forming structure that forms a seal in use on a nose bridge region or on a nose-ridge region of the patient's face.

[0331] In one form, the seal-forming structure includes a saddle-shaped region constructed to form a seal in use on a nose bridge region or on a nose-ridge region of the patient's face.

5.3.1.3 Upper lip region

[0332] In one form, the non-invasive patient interface 3000 comprises a seal-forming structure that forms a seal in use on an upper lip region (that is, the lip superior) of the patient's face.

[0333] In one form, the seal-forming structure includes a saddle-shaped region constructed to form a seal in use on an upper lip region of the patient's face.

5.3.1.4 Chin-region

[0334] In one form the non-invasive patient interface 3000 comprises a seal-forming structure that forms a seal in use on a chin-region of the patient's face.

[0335] In one form, the seal-forming structure includes a saddle-shaped region constructed to form a seal in use on a chin-region of the patient's face.

5.3.1.5 Forehead region

[0336] In one form, the seal-forming structure that forms a seal in use on a forehead region of the patient's face. In such a form, the plenum chamber may cover the eyes in use.

5.3.1.6 Nasal pillows

[0337] In one form the seal-forming structure of the non-invasive patient interface 3000 comprises a pair of nasal puffs, or nasal pillows, each nasal puff or nasal pillow being constructed and arranged to form a seal with a respective naris of the nose of a patient.

[0338] Nasal pillows in accordance with an aspect of the present technology include: a frusto-cone, at least a portion of which forms a seal on an underside of the patient's nose, a stalk, a flexible region on the underside of the frusto-cone and connecting the frusto-cone to the stalk. In addition, the structure to which the nasal pillow of the present technology is connected includes a flexible region adjacent the base of the stalk. The flexible regions can act in concert to facilitate a universal joint structure that is accommodating of relative movement both displacement and angular of the frusto-cone and the structure to which the nasal pillow is connected. For example, the frusto-cone may be axially displaced towards the structure to which the stalk is connected.

5.3.1.7 Seal-Forming Structure 3100 Of The Present Technology

[0339] The seal-forming structure 3100 according to examples of the present technology may seal around the patient's nares and mouth separately, *i.e.*, oro-nasal.

[0340] The seal-forming structure 3100 may include a nasal portion 3101 having a nasal portion hole 3103 to seal with the patient's nares. The depicted examples provide one nasal portion hole 3103 to provide the flow of air to both of the patient's nares. The nasal portion hole 3103, in an alternative example, may be divided into two separate holes that each corresponds to one of the patient's nares, and part of the nasal portion 3101 may separate the two separate holes.

[0341] The seal-forming structure 3100 may include an oral portion 3102 having an oral portion hole 3104 to seal with the patient's mouth.

[0342] The seal-forming structure 3100 may at least partly form a patient interface chamber 3001 that is pressurized by the flow of air. The plenum chamber 3200 may be joined to the seal-forming structure 3100 to further form the patient interface chamber 3001.

5.3.2 Plenum chamber

[0343] The plenum chamber 3200 has a perimeter that is shaped to be complementary to the surface contour of the face of an average person in the region where a seal will form in use. In use, a marginal edge of the plenum chamber 3200 is positioned in close proximity to an adjacent surface of the face. Actual contact with

the face is provided by the seal-forming structure 3100. The seal-forming structure 3100 may extend in use about the entire perimeter of the plenum chamber 3200. In some forms, the plenum chamber 3200 and the seal-forming structure 3100 are formed from a single homogeneous piece of material.

[0344] In certain forms of the present technology, the plenum chamber 3200 does not cover the eyes of the patient in use. In other words, the eyes are outside the pressurised volume defined by the plenum chamber. Such forms tend to be less obtrusive and / or more comfortable for the wearer, which can improve compliance with therapy.

[0345] In certain forms of the present technology, the plenum chamber 3200 is constructed from a transparent material, e.g. a transparent polycarbonate. The use of a transparent material can reduce the obtrusiveness of the patient interface, and help improve compliance with therapy. The use of a transparent material can aid a clinician to observe how the patient interface is located and functioning.

[0346] In certain forms of the present technology, the plenum chamber 3200 is constructed from a translucent material. The use of a translucent material can reduce the obtrusiveness of the patient interface, and help improve compliance with therapy.

[0347] The plenum chamber 3200 according to examples of the present technology may include a plenum chamber hole 3201 on each lateral side. The plenum chamber 3201 may provide pneumatic communication between the conduit connectors 3800, which are described in greater detail below, and the patient interface chamber 3001. The plenum chamber 3200 may include a connection rim 3202 around each plenum chamber hole 3201. The connection rim 3202 may facilitate a mechanical connection, *e.g.*, snap-fit or friction fit, with the respective conduit connector. The plenum chamber 3200 may be constructed of a sufficiently rigid material to provide audible and/or tactile feedback to the patient when the conduit connectors 3800 are connected to or removed from the plenum chamber 3200.

[0348] The seal-forming structure 3100 may be connected to the plenum chamber 3200. The connection may be permanent or the seal-forming structure 3100 may be removable from the plenum chamber 3200. The seal-forming structure 3100 may be overmoulded to the plenum chamber 3200. The seal-forming structure 3100 and the

plenum chamber 3200 may be joined by a mechanical interlock in which no chemical bond is formed between the plenum chamber 3200 and the seal-forming structure 3100.

5.3.3 Positioning and stabilising structure

[0349] The seal-forming structure 3100 of the patient interface 3000 of the present technology may be held in sealing position in use by the positioning and stabilising structure 3300.

[0350] In one form the positioning and stabilising structure 3300 provides a retention force at least sufficient to overcome the effect of the positive pressure in the plenum chamber 3200 to lift off the face.

[0351] In one form the positioning and stabilising structure 3300 provides a retention force to overcome the effect of the gravitational force on the patient interface 3000.

[0352] In one form the positioning and stabilising structure 3300 provides a retention force as a safety margin to overcome the potential effect of disrupting forces on the patient interface 3000, such as from tube drag, or accidental interference with the patient interface.

[0353] In one form of the present technology, a positioning and stabilising structure 3300 is provided that is configured in a manner consistent with being worn by a patient while sleeping. In one example the positioning and stabilising structure 3300 has a low profile, or cross-sectional thickness, to reduce the perceived or actual bulk of the apparatus. In one example, the positioning and stabilising structure 3300 comprises at least one strap having a rectangular cross-section. In one example the positioning and stabilising structure 3300 comprises at least one flat strap.

[0354] In one form of the present technology, a positioning and stabilising structure 3300 is provided that is configured so as not to be too large and bulky to prevent the patient from lying in a supine sleeping position with a back region of the patient's head on a pillow.

[0355] In one form of the present technology, a positioning and stabilising structure 3300 is provided that is configured so as not to be too large and bulky to prevent the patient from lying in a side sleeping position with a side region of the patient's head on a pillow.

[0356] In one form of the present technology, a positioning and stabilising structure 3300 is provided with a decoupling portion located between an anterior portion of the positioning and stabilising structure 3300, and a posterior portion of the positioning and stabilising structure 3300. The decoupling portion does not resist compression and may be, e.g. a flexible or floppy strap. The decoupling portion is constructed and arranged so that when the patient lies with their head on a pillow, the presence of the decoupling portion prevents a force on the posterior portion from being transmitted along the positioning and stabilising structure 3300 and disrupting the seal.

[0357] In one form of the present technology, a positioning and stabilising structure 3300 comprises a strap constructed from a laminate of a fabric patient-contacting layer, a foam inner layer and a fabric outer layer. In one form, the foam is porous to allow moisture, (e.g., sweat), to pass through the strap. In one form, the fabric outer layer comprises loop material to engage with a hook material portion.

[0358] In certain forms of the present technology, a positioning and stabilising structure 3300 comprises a strap that is extensible, e.g. resiliently extensible. For example the strap may be configured in use to be in tension, and to direct a force to draw a seal-forming structure into sealing contact with a portion of a patient's face. In an example the strap may be configured as a tie.

[0359] In one form of the present technology, the positioning and stabilising structure comprises a first tie, the first tie being constructed and arranged so that in use at least a portion of an inferior edge thereof passes superior to an otobasion superior of the patient's head and overlays a portion of the parietal bone without overlaying the occipital bone.

[0360] In one form of the present technology suitable for a nasal-only mask or for a full-face mask, the positioning and stabilising structure includes a second tie, the second tie being constructed and arranged so that in use at least a portion of a superior

edge thereof passes inferior to an otobasion inferior of the patient's head and overlays or lies inferior to the occipital bone of the patient's head.

[0361] In one form of the present technology suitable for a nasal-only mask or for a full-face mask, the positioning and stabilising structure includes a third tie that is constructed and arranged to interconnect the first tie and the second tie to reduce a tendency of the first tie and the second tie to move apart from one another.

[0362] In certain forms of the present technology, a positioning and stabilising structure 3300 comprises a strap that is bendable and e.g. non-rigid. An advantage of this aspect is that the strap is more comfortable for a patient to lie upon while the patient is sleeping.

[0363] In certain forms of the present technology, a positioning and stabilising structure 3300 comprises a strap constructed to be breathable to allow moisture vapour to be transmitted through the strap,

[0364] In certain forms of the present technology, a system is provided comprising more than one positioning and stabilizing structure 3300, each being configured to provide a retaining force to correspond to a different size and/or shape range. For example the system may comprise one form of positioning and stabilizing structure 3300 suitable for a large sized head, but not a small sized head, and another. suitable for a small sized head, but not a large sized head.

[0365] The positioning and stabilising structure 3300 may include a clip 3301 to secure respective ties, *e.g.*, to the conduit connectors 3800 as shown in FIGS. 32-36. The clip 3301 and the conduit connector 3800 may each include a magnet 3305 arranged with opposing polarities to facilitate a connection therebetween. The clip 3301 may also include a crossbar 3306 around which the inferior ties 3303 are passed to secure the clips 3301 thereto.

[0366] FIG. 66 depicts an exemplary positioning and stabilising structure 3300 that may include superior ties 3302, inferior ties 3303, and a posterior portion 3304.

5.3.4 Vent

[0367] In one form, the patient interface 3000 includes a vent 3400 constructed and arranged to allow for the washout of exhaled gases, e.g. carbon dioxide.

[0368] In certain forms the vent 3400 is configured to allow a continuous vent flow from an interior of the plenum chamber 3200 to ambient whilst the pressure within the plenum chamber is positive with respect to ambient. The vent 3400 is configured such that the vent flow rate has a magnitude sufficient to reduce rebreathing of exhaled CO2 by the patient while maintaining the therapeutic pressure in the plenum chamber in use.

[0369] One form of vent 3400 in accordance with the present technology comprises a plurality of holes, for example, about 20 to about 80 holes, or about 40 to about 60 holes, or about 45 to about 55 holes.

[0370] The vent 3400 may be located in the plenum chamber 3200. Alternatively, the vent 3400 is located in a decoupling structure, e.g., a swivel.

[0371] FIGS. 32 and 33 show an example of a vent 3400 provided on the connection port 3600. Variations of these examples may exclude a vent 3400 from the connection port 3600.

[0372] The conduit connectors 3800, which are described in greater detail below, may also include vent features.

5.3.5 Decoupling structure(s)

[0373] In one form the patient interface 3000 includes at least one decoupling structure, for example, a swivel or a ball and socket.

5.3.6 Connection port

[0374] Connection port 3600 allows for connection to the air circuit 4170. The connection port 3600 according to an example of the present technology may be connected to the connection port housing 3903. The connection port 3600 may be swivelable relative to the connection port housing 3903 and the connection to the air circuit 4170 may also be swivelable.

[0375] The connection port 3600 and the connection port housing 3903 may be positioned superior to the patient's head in use.

[0376] FIGS. 37 and 38 show a connection port 3600 for the patient interface 6000 according to another example of the present technology. While the present technology is described with reference to patient interface 6000, it is to be understood that the technology is not limited to such particular example and may be adapted for use with other suitable interface arrangements and types.

[0377] In the illustrated example, the connection port 3600 is in the form of a connection port structured and arranged to provide a releasable connection between the patient interface 6000 and the air circuit 4170.

[0378] The connection port 3600 comprises an elbow assembly 7700 configured to connect to the air circuit 4170 (e.g., via a swivel connector 7790) and a ring member 7900 configured to connect to the patient interface 6000. As described in greater detail below, the elbow assembly 7700 is repeatedly engageable with and removably disengageable from (i.e., connectable to and disconnectable from) the ring member 7900 to facilitate a releasable or separable connection between the rest of the patient interface 3000 and the air circuit 4170.

5.3.6.1 Elbow Assembly

[0379] The elbow assembly 7700 includes an elbow member 7710 having a first end portion and a second end portion. In the illustrated example, the elbow member 7710 includes a 90° bend such that the first end portion is generally perpendicular to the second end portion, i.e., central axis of the first end portion is at a 90° angle to the central axis of the second end portion. However, it should be appreciated that the first end portion and the second end portion may be arranged in alternative configurations, e.g., arranged at non-perpendicular angle relative to one another.

[0380] A clip member 7730 is provided to the first end portion. In the illustrated example, the clip member 7730 is structured and arranged to provide a releasable connection, e.g., releasable snap-fit connection or separable snap joint assembly, with the ring member 7900. The second end portion is provided with the swivel connector 7790 (e.g., swivel connector 7790 permanently connected to the second end portion) adapted to connect to the air circuit 4170.

[0381] Also, a plurality of vent holes 7720 are provided along a rear wall of the elbow member 7710 (e.g., at least 10 vent holes, e.g., 10 to 20 vent holes) to permit the exit of exhaust gases from the patient interface 3000. As illustrated, the vent holes 7720 are arranged in columns, however it should be appreciated that the vent holes may be arranged in other suitable manners, e.g., concentrically arranged. In an example, each vent hole 7720 may include a contour or taper along its length, e.g., each hole converges in the direction of exhausted gas. However, each vent hole 7720 may have other suitable shapes to direct exhaust or washout gas. Further, in the illustrated example, the vent holes 7720 may be positioned on a portion of the rear wall that is generally flat or planar such that an exit end of each vent hole is provided along a generally flat or planar surface. However, it should be appreciated that the vent holes 7720 may be positioned on a portion of the elbow member 7710 having other shapes, e.g., rounded or convex.

[0382] The clip member 7730 includes a pair of resilient, quick release pinch arms 7740 and a connecting portion 7760 that interconnects the pinch arms 7740, i.e., pinch arm 7740 provided at each end of the connecting portion 7760.

[0383] Each of the pinch arms 7740 includes a catch portion 7750 and a button or trigger portion 7780. The pinch arms 7740 are structured and arranged to provide a releasable snap-fit connection or separable snap joint assembly with the ring member 7900, e.g., catch portions 7750 configured to deflect and snap into a recess or undercut on the ring member 7900. The button portions 7780 are structured and arranged to be manually pinched or squeezed to deflect the catch portions 7750 for separation or release of the catch portions 7750 from the ring member 7900 and hence allow separation of the elbow assembly 7700 from the ring member 7900.

[0384] Each catch portion 7750 includes a barbed end, rib, or catch structured to provide the snap joint assembly with the ring member 7900. Each button or trigger portion 7780 includes a finger-grip portion 7781, e.g., recessed portion adjacent a free end of the pinch arm 7740.

[0385] In the illustrated example, the clip member 7730 and the elbow member 7710 comprise separately molded components (i.e., separate and distinct structures) that are subsequently connected to one another, e.g., snap-fit connection. For example, the

clip member 7730 may be comprised of a material that is more flexible than a material of the elbow member 7710, thereby allowing the clip member 7730 to flex onto and connect to the first end portion of the elbow member 7710. In an example, a retaining arrangement is provided to connect or secure the clip member to the elbow member, e.g., a snap-fit connection or snap joint assembly.

[0386] In the illustrated example, the clip member 7730 comprises an open-ended configuration with a semi-flexible and generally semi-circular connecting portion 7760 which allows the clip member 7730 to be connected to the elbow member 7710, e.g., in a manner similar to a circlip.

[0387] In an example, the catch portions 7750 of the clip member 7730 may be biased inwards so that, when the clip member 7730 is connected to the elbow member 7710, the catch portions 7750 are biased inwards to grip the elbow member 7710 and provide further resistance to removal from the elbow member 7710.

[0388] In the illustrated example, the elbow member 7710 and the clip member 7730 provide a two-part assembly or construction. An exemplary advantage of such two-part construction is that it may allow manufacture with fewer restraints on materials. For example, the clip member 7730 and the elbow member 7710 comprise separately molded components so that there is less co-dependence between the clip member 7730 and the elbow member 7710, e.g., clip member 7730 not subject to material constraints of the elbow member 7710. In an example, the clip member 7730 and the elbow member 7710 comprise different materials and/or different material properties relative to one another. In an example, the clip member 7730 and the elbow member 7710 are not molded in one piece from the same material.

[0389] In an example, the elbow member 7710 may be comprised of a material (e.g., polycarbonate) that is more rigid than a material of the clip member 7730 (e.g., nylon-12). The material (e.g., nylon-12) of the clip member 7730 may be relatively flexible and robust, e.g., facilitate flexing of the pinch arms, resistant to wear, maintain connection to elbow member. The material (e.g., polycarbonate) of the elbow member 7710 may be relatively rigid, e.g., resistant to wear, clear to facilitate cleaning, facilitate manufacturing.

[0390] Furthermore, the two-part construction may allow each part to be less complex in geometry, resulting in an assembly that may allow simpler tooling for manufacture.

[0391] In the illustrated example, the clip member 7730 is structured and arranged to provide a releasable connection, e.g., snap-fit connection, with the elbow member 7710. Such releasable or separable arrangement may be advantageous to facilitate cleaning of the clip member 7730 and the elbow member 7710 when separated.

[0392] In an alternative example, the clip member 7730 may not be removably connected to the elbow member 7710, e.g., clip member may be permanently connected to the elbow member. Such non-removable arrangement may be advantageous as it reduces the possibly of the clip member being lost or broken. Since the clip member is outside of the air flow path, a thorough cleaning may not be as essential, e.g., compared to components exposed to the air flow path.

[0393] In an example, the clip member 7730 and the elbow member 7710 may comprise separately molded components that are subsequently permanently connected to one another such that the clip member 7730 may not be separable from the elbow member 7710. Any suitable means may be employed to permanently join or connect the clip member and the elbow member.

[0394] In one example, the clip member 7730 and the elbow member 7710 may be welded or bonded to one another, e.g., ultrasonically welded to one another. For example, the clip member 7730 may be connected to the elbow member 7710 as described above, and then one or more portions (e.g., a center portion) of the connecting portion 7760 of the clip member 7730 may be welded or bonded to the elbow member 7710 to permanently secure the clip member to the elbow member. This connection would enable the connecting portion to provide the torsion (and resistance to torsion) sufficient for operation of the pinch arms 7740.

[0395] Alternatively, the elbow assembly may be structured such that the clip member can be easily assembled to the elbow member but structure of the elbow member and/or clip member makes disassembly difficult or challenging. Such elbow assembly with separately manufactured elbow member and clip member may achieve

desired advantages (e.g., fewer restraints on material selection) while avoiding the additional welding or bonding operation to fix the clip member to the elbow member.

[0396] The ring member 7900 is configured to be removably and sealingly secured in the opening or aperture of the connection port housing 3903. The elbow assembly 7700 releasably connects to the ring member 7900 via the pinch arms 7740, e.g., snap-fit or snap joint assembly.

[0397] The connection port 3600 provides decoupling of the air circuit 4170 from the patient interface, e.g., to enhance the decoupling of tube drag on the patient interface to prevent seal instability.

[0398] One form of decoupling is provided by the pinch arms 7740 which form the swivel connection allowing 360° free rotation of the elbow assembly 7700 relative to the ring member 7900. Another form of decoupling is provided by the swivel connector 7790 allowing 360° free rotation of the swivel connector 7790 (and the air circuit 4170 connection thereto) relative to the elbow member 7710.

5.3.7 Forehead support

[0399] In one form, the patient interface 3000 includes a forehead support 3700.

[0400] Examples of the patient interface of the present technology shown in Figs. 7-36 do not include a forehead support. Variations of the patient interface of the present technology may include a forehead support.

5.3.8 Conduits

[0401] The patient interface 3000 according to examples of the present technology may include conduits 3900 to provide the flow of pressurized from the connection port 3600 to the patient interface chamber 3001. The conduits 3900 may be joined superior to the patient's head at the connection port housing 3903 and may pass along lateral sides of the patient's head between corresponding ones of the patient's eyes and ears. The conduits 3900 may be connected to the plenum chamber 3200 via conduit connectors 3800, as described below, to provide the flow of pressurized air to the patient interface chamber 3001.

[0402] The conduits 3900 may also provide stabilize and position the seal-forming structure 3100 on the patient's face. Thus, the conduits 3900 may function similarly to the ties of the positioning and stabilising structure 3300. Accordingly, the mechanical connection of the conduits 3900 to the conduit connectors 3800 may be sufficient for tension forces in the conduits 3900 to be transmitted to the seal-forming structure 3100 through the conduit connectors 3800.

[0403] The conduits 3900 may include features of similar conduits disclosed in International Application Publication No. WO 2017/124155 Al, which is incorporated by reference herein in its entirety. For example, the conduits 3900 of the present technology may include features of the headgear tubes 3350 depicted in FIGS. 3A-3L of this document, as well as the associated written description.

[0404] The conduits 3900 may also be provided with sleeves 3901 to cushion the patient's face against the conduits 3900. The sleeves 3901 may be removable. The sleeves 3901 may be made from a breathable material.

[0405] The conduits 3900 may also include tie connectors 3902 to facilitate connection with ties of the positioning and stabilising structure 3300.

5.3.9 Conduit Connectors

[0406] The patient interface 3000, according to examples of the present technology, may include conduit connectors 3800 to connect the conduits 3900 to the plenum chamber 3200 to provide the flow of pressurized air to the patient interface chamber 3001. The conduit connectors 3800 may each be formed with a conduit connector housing 3801. The conduit connectors 3800 may provide other functions, as described below, such as venting of the patient interface chamber 3001, connection to the positioning and stabilising structure 3300, and asphyxia prevention by inclusion of an anti-asphyxia valve 3850.

[0407] FIGS. 7-18 show several views of the conduit connectors 3800 on the patient interface 3000, according to examples of the present technology. FIGS. 25-31 show several views of the conduit connectors 3800, according to examples of the present technology, in isolation. FIGS. 32-36 show several views of the complete patient interface 3000 with the conduits 3900 and the positioning and stabilising

structure 3300 connected to the conduit connectors 3800, according to examples of the present technology.

[0408] In FIGS. 7-18, the conduit connectors 3800 are shown attached to the plenum chamber 3200 at the plenum chamber holes 3201. As can be seen, there is one conduit connector 3800 on each lateral side of the patient interface 3000, and each conduit connector 3800 is connected to a plenum chamber hole 3201 on each corresponding lateral side of the patient interface 3000. The conduit connectors 3800 may each include a conduit connector attachment structure 3807 to connect each of the conduit connectors 3800 to a respective plenum chamber hole 3201 at the connection rim 3202. The connection may be mechanical, *e.g.*, snap-fit or friction fit. The connection may also be removable. The material of the conduit connectors 3800 and the material of the plenum chamber 3200 may each be selected to facilitate the desired connection features. For example, the material of the conduit connectors 3800 and the material of the plenum chamber 3200 may each be relatively rigid to permit the audible and/or tactile feedback associated with a snap-fit. The material of the conduit connectors 3800 and the material of the plenum chamber 3200 may be different in at least one aspect or the materials may be the same. The conduit connectors 3800 may also be permanently connected to the plenum chamber 3200 at the plenum chamber holes 3201. For example, the conduit connectors 3800 may be ultrasonically welded to the plenum chamber 3200 at the plenum chamber holes 3201. The connection between the conduit connectors 3800 and the plenum chamber 3200, whether removable or permanent, may also be designed to be sufficiently strong such that tension from the conduits 3900 can be transferred to the plenum chamber 3200 without disrupting the connection because, as explained above, the conduit connectors 3800 may facilitate positioning and stabilising of the seal-forming structure 3100 on the patient's head.

[0409] The conduit connectors 3800 may also be attached to lateral sides of the plenum chamber 3200 to improve aesthetics of the patient interface 3000. As explained above, the plenum chamber 3200 may be constructed of a transparent or translucent material, which may allow visibility of the patient's facial features. By locating the conduit connectors 3800 laterally on the plenum chamber, *e.g.*, as shown in the depicted examples, more of the patient's face is visible, and that arrangement

can improve aesthetics of the patient interface 3000. This contrasts with alternative designs where an elbow and air circuit may be joined to the center of the plenum chamber 3200, thereby obstructing the view of the patient's face.

[0410] The conduit connectors 3800 and the plenum chamber holes 3201 may also be arranged so that at least a portion of the conduit connector housing 3801 extends into the patient interface chamber 3001. This arrangement may reduce the dead space within the patient interface chamber 3001 by making use of volume within the patient interface chamber 3001 with the conduit connectors 3800. Accordingly, less of the conduit connectors 3800 overall volume extends outwardly from the patient interface 3000. This may be advantageous because it reduces the excess structures that are susceptible to being caught on bedding, and it provide a sleeker aesthetic for the patient that may be more visually appealing.

[0411] The conduit connectors 3800 may also each include a conduit connection end 3802 that connects to a respective conduit 3900. The connection between the conduits 3900 and the conduit connectors 3800 at the conduit connection ends 3802 may be removable or permanent. A conduit connector inlet hole 3803 may be formed in the conduit connector housing 3801 at the conduit connection end 3802 to receive the flow of pressurized air. The conduit connectors 3800 may include structure, *e.g.*, an undercut, to facilitate a removable, snap-fit connection with corresponding conduits 3900, and each conduit 3900 may include a relatively rigid structure at the end that connects to the conduit connectors 3800 to facilitate such a connection. The conduit connectors 3800 may also be joined to the conduits 3900 with a friction fit. Again, as explained above, the conduits 3900 may provide a positioning and stabilising function to locate the seal-forming structure in a therapeutically effective sealing position on the patient's face, and therefore the connection between the conduits 3900 and the conduit connectors 3800 at the conduit connection ends 3802 may be sufficiently secure to permit tension forces from the conduits 3900 to be transmitted to the conduit connectors 3800 without disrupting the connection between the conduits 3900 and the conduit connectors 3800 at the conduit connection ends 3802.

[0412] The conduit connectors 3800 may also provide a venting function for the patient interface 3000. The conduit connector housing 3801 may include a conduit

connector vent inlet 3832 that is in pneumatic communication with the patient interface chamber 3001 when the patient interface 3000 is assembled. The conduit connector housing 3801 may also include at least one conduit connector vent hole 3831. As can be seen in the depicted examples, each conduit connector housing 3801 includes a plurality of conduit connector vent holes 3831. The conduit connector housing 3801 may also include a baffle 3805 to prevent air entering the patient interface chamber 3001 via the conduit connector outlet hole 3804 from escaping directly out the conduit connector vent hole(s) 3831. This ensures adequate mixing of newly introduced air and air already present in the patient interface chamber 3001, which can enhance carbon dioxide washout and increase the amount of fresh air provided to the patient for respiration. The conduit connector housing 3801 may also include at least one conduit connector vent spacer 3833 – FIGS. 25-31 show a plurality of conduit connector vent spacers 3833 in these examples – to provide a passageway for exhaled gas to escape to atmosphere from the conduit connectors 3800 via a conduit connector vent outlet 3830. The conduit connector vent spacers 3833 may be distributed around a portion of the perimeter of the conduit connector housing 3801. The conduit connector vent spacers 3833 may maintain spacing between a portion of the conduit connector housing 3801 and the plenum chamber 3200 for the conduit connector vent outlet 3830.

[0413] The conduit connector housing 3801 may also include a diffuser cavity 3871 that may contain diffuser material (not shown). The diffuser material may be enclosed within the diffuser cavity 3871 by a diffuser cover 3870. The diffuser cover 3870 may be permanently attached to the conduit connector housing 3801, which prevents the patient from changing the diffuser material if it becomes occluded due to contaminants. In this example, the diffuser cover 3870 may be ultrasonically welded to the conduit connector housing 3801. Alternatively, the diffuser cover 3870 may be removably attached to the conduit connector housing 3801, *e.g.*, via a snap-fit or a friction fit, which would permit the patient to replace the diffuser material.

[0414] As shown in FIGS. 32-36, the conduit connectors 3800 may also provide a connection to ties of the positioning and stabilising structure 3300. The inferior ties may be joined to the conduit connectors 3800 with clips 3301. The clips 3301 and the conduit connectors 3800 may include magnets with opposing polarities to facilitate

the connection. The connection between the ties of the positioning and stabilising structure 3300 and the conduit connectors 3800 may be releasable. The tension from the inferior ties of the positioning and stabilising structure 3300 may urge inferior portions of the seal-forming structure 3100 into sealing engagement with the patient's face, *e.g.*, around the mouth. Although not shown in FIGS. 25-31, structure to connect to the clips 3301 may be formed on the diffuser cover 3870. Alternatively, structure to connect to the clips 3301 may be formed directly on the conduit connector housing 3801.

[0415] FIGS. 39-66 depict another example of the present technology that includes features similar to the example depicted in FIGS. 7-36. The example in FIGS. 39-66 also includes features that are different from the example depicted in FIGS. 7-36.

[0416] As can be seen in the example depicted in FIGS. 39-66, the plenum chamber 3200 includes a plurality of plenum chamber vent holes 3401 to permit the discharge of gas, including exhaled carbon dioxide, from the patient interface chamber 3001 to atmosphere. Accordingly, the conduit connectors 3800 of this example do not include any venting structures (*i.e.*, conduit connector vent outlet 3830, conduit connector vent hole 3831, conduit connector vent inlet 3832, etc.) present in the preceding example because the plenum chamber vent holes 3401 can be sized, shaped, and a large enough number provided to permit sufficient carbon dioxide washout.

[0417] In an alternative example, the conduit connectors 3800 may include the conduit connector vent outlet 3830, conduit connector vent hole 3831, conduit connector vent inlet 3832, etc., while the plurality of plenum chamber vent holes 3401 are also provided on the plenum chamber 3200. This arrangement may be advantageous in that it may provide additional and/or more diffuse venting.

[0418] Although the conduit connectors 3800 of this example do not include any venting structures (*i.e.*, conduit connector vent outlet 3830, the anti-asphyxia valve assembly 3850 is still provided to each of the conduit connectors 3800 for safety reasons. FIGS. 46 and 47 show movement of the anti-asphyxia valve flap 3851 between open and closed positions, similar to the example described above.

[0419] In the example of FIGS. 39-66, the plenum chamber 3200 may have no sealing structure on the plenum chamber holes 3201. In this example, sealing between the conduit connectors 3800 and the plenum chamber 3200 may be accomplished with conduit connector outlet seal 3861 joined around the exterior perimeter of the conduit connector outlet 3808. The conduit connector outlet seal 3861 may be constructed of an elastomeric material, *e.g.*, silicone, that deforms upon contact with a connection rim 3202 around each plenum chamber hole 3201. The conduit connector outlet seal 3861 may be overmolded to the conduit connector outlet 3808. When the conduit connectors 3800 are attached to corresponding plenum chamber holes 3201, the conduit connector outlet seals 3861 deform against the connection rim 3202 and ensure sealing therebetween. The conduit connector outlet seal 3861 in this example may extend around the entirety of the conduit connector outlet 3808or the conduit connector outlet seal 3861 may only be provided at one or more selected portions around the conduit connector outlet 3808.

[0420] Alternatively, it is also contemplated that the conduit connector outlet seal 3861 is provided to the connection rim 3202 of each plenum chamber hole 3201 to be deformed against the conduit connector outlet 3808 of each conduit connector 3800. The conduit connector outlet seal 3861 in this example may extend around the entirety of the plenum chamber hole 3201 or the conduit connector outlet seal 3861 may only be provided at one or more selected portions around the plenum chamber hole 3201.

[0421] In a further alternative example, there may be no deformable sealing component between the conduit connector 3800 and the connection rim 3202 of the corresponding plenum chamber hole 3201. Thus, leak may be permitted in this alternative or the tolerances between the conduit connector 3800 and the connection rim 3202 of the corresponding plenum chamber hole 3201 may be so small as to permit little or no leak.

[0422] In the example of FIGS. 39-66, the conduit connectors 3800 may be configured to provide a releasable connection to the plenum chamber 3200 at the corresponding plenum chamber hole 3201. The conduit connectors 3800 may be constructed of a relatively rigid, plastic material, *e.g.*, polycarbonate, to facilitate the connection described below.

[0423] A slot 3203 and a detent 3204 may be formed on the plenum chamber 3200 at each plenum chamber hole 3201 to engage with corresponding structures of the conduit connectors 3800. The engagement process may begin by engaging a first tab 3890 with the slot 3203 from an anterior side (*i.e.*, facing away from the patient in use) of the plenum chamber 3200. The first tab 3890 may be relatively rigid and its engagement with the slot 3203 may act as a fulcrum so that the conduit connector 3800 can then be rotated about the slot 3203 to complete the engagement process. The engagement process may be completed by a second tab 3891 having a catch 3892 engaging the detent 3204 of the plenum chamber 3204. As the conduit connector 3800 is rotated into engagement with the plenum chamber 3200 in the corresponding plenum chamber hole 3201, the conduit connector outlet seal 3861 may engage the corresponding connection rim 3202 to establish a pneumatic seal. Additionally, the conduit connector outlet 3808 may extend, at least partially, through the corresponding plenum chamber hole 3201 so that gas can travel between the patient interface chamber 3001 and the conduit connector 3800. The second tab 3891 may be flexible so that when the catch 3892 and the detent 3204 come into engagement a snap-fit connection is established. This may be beneficial for the patient because the snap-fit connection provides tactile and audible feedback that the connection is established. Gaps 3893 on either side of the second tab 3891 and between the conduit connector outlet 3808 allow the second tab 3891 to be cantilevered for easier deformation during the engagement and disengagement processes.

[0424] The disengagement process happens in the opposite order by first disengaging the catch 3892 from the corresponding detent 3204 by rotating the conduit connector 3800 in an anterior direction away from the plenum chamber 3200. Since the second tab 3891 is flexible, once sufficient force is applied the second tab will deflect and allow the catch 3892 to disengage from the detent 3204. The conduit connector 3800 is then rotated further so that the first tab 3890 disengages from the slot 3203. During the disengagement process, the conduit connector outlet seal 3861 also disengages from the corresponding connection rim 3202 and the conduit connector outlet 3808 exits the corresponding plenum chamber hole 3201.

[0425] When engaged, the conduit connector 3800 may protrude in an anterior direction relative to the plenum chamber 3200 such that the conduits 3900 are

directed laterally away from the plenum chamber 3200. By locating the conduits 3900 forward of the plenum chamber 3200, the conduits 3900 may remain engaged and undamaged when lateral forces pull the conduits 3900 away from the plenum chamber 3200, while also lowering the force required to disengage the conduit connectors 3800, and therefore also the conduits 3900, from the plenum chamber 3200. Thus, the conduits 3900, as will be discussed further below, may be joined to the conduit connectors 3800 with sufficient strength to resist disengagement in a lateral direction, while also allowing the conduit connectors 3800 to be relatively easily removed from the plenum chamber 3200 by rotating out of the plenum chamber holes 3201, as described above. This arrangement may be beneficial in the typical use case because lateral forces may be common during use, *i.e.*, sleep, and it is advantageous to ensure that the patient interface 3000 can resist these forces without disrupting the connection between the conduits 3900 and the plenum chamber 3200, and therefore the flow of gas. However, forces that would cause the disengagement process described above to occur are less common during sleep. Accordingly, the first tab 3890 and the second tab 3891 can be designed to engage and disengage from the slot 3203 and detent 3204 with relatively low force in the respective directions, which in turn allows the patient to easily engage and disengage the conduit connectors 3800. The disengagement force in this example may be as low as 8 to 12 Newtons.

[0426] Additionally, the force required to disengage the conduit connectors 3800 may be sufficiently low that the conduit connectors 3800 may be disengaged by application of a force in an anterior direction on a flange 3885 configured for magnetic fastening of positioning and stabilising structure 3300.

[0427] The conduit connector 3800 may also include a flange 3885 to connect the inferior ties 3303 to the conduit connector 3800 via clips 3301. The flange 3885 may extend from the conduit connector 3800. The flange 3885 may be molded in one piece with the conduit connector 3800. The flange 3885 may include a flange opening 3887 and a recess 3886 to receive a tab connector 3884 of an inferior tie tab 3880. To attach the inferior tie tab 3880 to the flange 3885, the tab connector 3884 passes through the flange opening 3887 and engages in the recess 3886. The inferior tie tab 3880 may include a clip receiver 3881 that may house a magnet to provide a releasable connection to a corresponding magnet in a clip 3301. The clip receiver 3881 may also

engage with an overhang 3307 of the clip 3301 to ensure that the clip 3301 remains engaged with the inferior tie tab 3880. Thus, attraction between the magnets of the clip 3301 and the clip receiver 3881 may provide a locating function while engagement of the overhang 3307 and the clip receiver 3881 ensure that the clip 3301 remains securely connected to the inferior tie tab 3880. It should be understood that the connection between the clip 3301 and the inferior tie tab 3880 is releasable by applying force sufficient to overcome the attraction between the two magnets. The inferior tie tab 3880 may also include a notch 3882.

[0428] The conduit 3900 may be joined to the conduit connector 3800 at the conduit connector end 3802 permanently or removably. FIG. 63 depicts an example of a permanent connection whereby an intermediate conduit connector inlet seal 3860, e.g., of silicone, is molded around the conduit connector end 3802. The conduit 3900, which may also be silicone, is molded onto the intermediate conduit connector inlet seal 3860.

5.3.10 Anti-asphyxia valve

[0429] In one form, the patient interface 3000 includes an anti-asphyxia valve. As can be seen in the examples depicted in FIGS. 7-18 and 25-31, each of the conduit connectors 3800 may include an anti-asphyxia valve assembly 3850. Accordingly, the patient interface 3000 may include two anti-asphyxia valve assemblies 3850. Each of the anti-asphyxia valve assemblies 3850 may operate independent of the other, *i.e.*, in response to a cessation of the flow of pressurized air. For example, if the patient is sleeping on his or her side when there is a cessation of the flow of pressurized air and one of the anti-asphyxia valve assemblies 3850 is occluded, *e.g.*, by a pillow, the other of the anti-asphyxia valve assemblies 3850 can function to prevent the patient from being asphyxiated.

[0430] The anti-asphyxia valve assembly 3850 may include an anti-asphyxia valve flap 3851 that covers an anti-asphyxia valve hole 3852 in a closed position. The cross-sectional view of FIGS. 14 and 29 depict the anti-asphyxia valve flap 3851 in the closed position. In these views, it can be seen that the flow of pressurized air entering the conduit connectors 3800 will be prevented from escaping to atmosphere through the anti-asphyxia valve hole 3852 by the anti-asphyxia valve flap 3851 and will be directed into the patient interface chamber 3001 by the conduit connector

outlet hole 3804. The anti-asphyxia valve flap 3851 may be configured to remain in the closed position during the patient's entire respiratory cycle, *i.e.*, inhalation and exhalation. Thus, the patient receives the flow of pressurized air to their airways to ensure that patient's airways maintain sufficient patency during inhalation and exhalation. FIGS. 15 and 30 depict the anti-asphyxia valve flap 3851 in an open position in which the anti-asphyxia valve hole 3852 is not covered such that the patient can breathe from atmosphere via the anti-asphyxia valve hole 3852, if there is a cessation of the flow of pressurized air. Moreover, the anti-asphyxia valve flap 3851 may be constructed such that the open position may be the default, neutral, or undeformed position so that only when the pressurized flow of air, at least to a minimum flow rate and/or pressure, is applied is the anti-asphyxia valve flap 3851 moved to the closed position by the force of the pressure and/or flow of the air. Additionally, the anti-asphyxia valve hole 3852 may be sized sufficiently so that if one of the anti-asphyxia valve assemblies 3850 is occluded and prevented from permitting respiration, the patient can breathe adequately through the non-occluded anti-asphyxia valve assembly 3850. Furthermore, the anti-asphyxia valve flap 3851 may be sized so as to completely occlude the anti-asphyxia valve hole 3852 in the closed position. Alternatively, the anti-asphyxia valve flap 3851 may include holes that allow air to pass through to atmosphere, *e.g.*, for venting, in the closed position.

[0431] The anti-asphyxia valve flap 3851 may be joined to the conduit connector housing 3801 with an anti-asphyxia valve flap connector 3854 that extends into an anti-asphyxia valve flap connector hole 3853. The anti-asphyxia valve flap 3851 may be permanently attached to the conduit connector housing 3801 at the anti-asphyxia valve flap connector hole 3853 by being overmoulded onto the conduit connector housing 3801. The anti-asphyxia valve flap 3851 may be made of a flexible, elastic material that allows it to be deflected from the open position to the closed position by the force of the pressure and/or flow of the air.

[0432] The an anti-asphyxia valve assembly 3850 may also include an anti-asphyxia valve hole divider 3855 across the anti-asphyxia valve hole 3852. The anti-asphyxia valve hole divider 3855 may prevent the anti-asphyxia valve flap 3851 from being pushed out the anti-asphyxia valve hole 3852 due to pressure within the patient interface chamber 3001.

5.3.11 Ports

[0433] In one form of the present technology, a patient interface 3000 includes one or more ports that allow access to the volume within the plenum chamber 3200. In one form this allows a clinician to supply supplemental oxygen. In one form, this allows for the direct measurement of a property of gases within the plenum chamber 3200, such as the pressure.

5.4 RPT DEVICE

[0434] An RPT device 4000 in accordance with one aspect of the present technology comprises mechanical, pneumatic, and/or electrical components and is configured to execute one or more algorithms, such as any of the methods, in whole or in part, described herein. The RPT device 4000 may be configured to generate a flow of air for delivery to a patient's airways, such as to treat one or more of the respiratory conditions described elsewhere in the present document.

[0435] In one form, the RPT device 4000 is constructed and arranged to be capable of delivering a flow of air in a range of -20 L/min to +150 L/min while maintaining a positive pressure of at least 6 cmH_2O, or at least 10cmH_2O, or at least 20 cmH_2O.

[0436] The RPT device may have an external housing 4010, formed in two parts, an upper portion 4012 and a lower portion 4014. Furthermore, the external housing 4010 may include one or more panel(s) 4015. The RPT device 4000 comprises a chassis 4016 that supports one or more internal components of the RPT device 4000. The RPT device 4000 may include a handle 4018.

[0437] The pneumatic path of the RPT device 4000 may comprise one or more air path items, e.g., an inlet air filter 4112, an inlet muffler 4122, a pressure generator 4140 capable of supplying air at positive pressure (e.g., a blower 4142), an outlet muffler 4124 and one or more transducers 4270, such as pressure sensors 4272 and flow rate sensors 4274.

[0438] One or more of the air path items may be located within a removable unitary structure which will be referred to as a pneumatic block 4020. The pneumatic

block 4020 may be located within the external housing 4010. In one form a pneumatic block 4020 is supported by, or formed as part of the chassis 4016.

[0439] The RPT device 4000 may have an electrical power supply 4210, one or more input devices 4220, a central controller 4230, a therapy device controller 4240, a pressure generator 4140, one or more protection circuits 4250, memory 4260, transducers 4270, data communication interface 4280 and one or more output devices 4290. Electrical components 4200 may be mounted on a single Printed Circuit Board Assembly (PCBA) 4202. In an alternative form, the RPT device 4000 may include more than one PCBA 4202.

5.4.1 RPT device mechanical & pneumatic components

[0440] An RPT device may comprise one or more of the following components in an integral unit. In an alternative form, one or more of the following components may be located as respective separate units.

5.4.1.1 Air filter(s)

[0441] An RPT device in accordance with one form of the present technology may include an air filter 4110, or a plurality of air filters 4110.

[0442] In one form, an inlet air filter 4112 is located at the beginning of the pneumatic path upstream of a pressure generator 4140.

[0443] In one form, an outlet air filter 4114, for example an antibacterial filter, is located between an outlet of the pneumatic block 4020 and a patient interface 3000.

5.4.1.2 Muffler(s)

[0444] An RPT device in accordance with one form of the present technology may include a muffler 4120, or a plurality of mufflers 4120.

[0445] In one form of the present technology, an inlet muffler 4122 is located in the pneumatic path upstream of a pressure generator 4140.

[0446] In one form of the present technology, an outlet muffler 4124 is located in the pneumatic path between the pressure generator 4140 and a patient interface 3000.

5.4.1.3 Pressure generator

[0447] In one form of the present technology, a pressure generator 4140 for producing a flow, or a supply, of air at positive pressure is a controllable blower 4142. For example the blower 4142 may include a brushless DC motor 4144 with one or more impellers housed in a blower housing, such as in a volute. The blower may be capable of delivering a supply of air, for example at a rate of up to about 120 litres/minute, at a positive pressure in a range from about 4 cmH_2O to about 20 cmH_2O, or in other forms up to about 30 cmH_2O. The blower may be as described in any one of the following patents or patent applications the contents of which are incorporated herein by reference in their entirety: U.S. Patent No. 7,866,944; U.S. Patent No. 8,638,014; U.S. Patent No. 8,636,479; and PCT Patent Application Publication No. WO 2013/020167.

[0448] The pressure generator 4140 is under the control of the therapy device controller 4240.

[0449] In other forms, a pressure generator 4140 may be a piston-driven pump, a pressure regulator connected to a high pressure source (e.g. compressed air reservoir), or a bellows.

5.4.1.4 Transducer(s)

[0450] Transducers may be internal of the RPT device, or external of the RPT device. External transducers may be located for example on or form part of the air circuit, e.g., the patient interface. External transducers may be in the form of non-contact sensors such as a Doppler radar movement sensor that transmit or transfer data to the RPT device.

[0451] In one form of the present technology, one or more transducers 4270 are located upstream and/or downstream of the pressure generator 4140. The one or more transducers 4270 may be constructed and arranged to generate signals representing properties of the flow of air such as a flow rate, a pressure or a temperature at that point in the pneumatic path.

[0452] In one form of the present technology, one or more transducers 4270 may be located proximate to the patient interface 3000.

[0453] In one form, a signal from a transducer 4270 may be filtered, such as by low-pass, high-pass or band-pass filtering.

5.4.1.4.1 Flow rate sensor

[0454] A flow rate sensor 4274 in accordance with the present technology may be based on a differential pressure transducer, for example, an SDP600 Series differential pressure transducer from SENSIRION.

[0455] In one form, a signal representing a flow rate from the flow rate sensor 4274 is received by the central controller 4230.

5.4.1.4.2 Pressure sensor

[0456] A pressure sensor 4272 in accordance with the present technology is located in fluid communication with the pneumatic path. An example of a suitable pressure sensor is a transducer from the HONEYWELL ASDX series. An alternative suitable pressure sensor is a transducer from the NPA Series from GENERAL ELECTRIC.

[0457] In one form, a signal from the pressure sensor 4272 is received by the central controller 4230.

5.4.1.4.3 Motor speed transducer

[0458] In one form of the present technology a motor speed transducer 4276 is used to determine a rotational velocity of the motor 4144 and/or the blower 4142. A motor speed signal from the motor speed transducer 4276 may be provided to the therapy device controller 4240. The motor speed transducer 4276 may, for example, be a speed sensor, such as a Hall effect sensor.

5.4.1.5 Anti-spill back valve

[0459] In one form of the present technology, an anti-spill back valve 4160 is located between the humidifier 5000 and the pneumatic block 4020. The anti-spill back valve is constructed and arranged to reduce the risk that water will flow upstream from the humidifier 5000, for example to the motor 4144.

5.4.2 RPT device electrical components

5.4.2.1 Power supply

[0460] A power supply 4210 may be located internal or external of the external housing 4010 of the RPT device 4000.

[0461] In one form of the present technology, power supply 4210 provides electrical power to the RPT device 4000 only. In another form of the present technology, power supply 4210 provides electrical power to both RPT device 4000 and humidifier 5000.

5.4.2.2 Input devices

[0462] In one form of the present technology, an RPT device 4000 includes one or more input devices 4220 in the form of buttons, switches or dials to allow a person to interact with the device. The buttons, switches or dials may be physical devices, or software devices accessible via a touch screen. The buttons, switches or dials may, in one form, be physically connected to the external housing 4010, or may, in another form, be in wireless communication with a receiver that is in electrical connection to the central controller 4230.

[0463] In one form, the input device 4220 may be constructed and arranged to allow a person to select a value and/or a menu option.

5.4.2.3 Central controller

[0464] In one form of the present technology, the central controller 4230 is one or a plurality of processors suitable to control an RPT device 4000.

[0465] Suitable processors may include an x86 INTEL processor, a processor based on ARM® Cortex®-M processor from ARM Holdings such as an STM32 series microcontroller from ST MICROELECTRONIC. In certain alternative forms of the present technology, a 32-bit RISC CPU, such as an STR9 series microcontroller from ST MICROELECTRONICS or a 16-bit RISC CPU such as a processor from the MSP430 family of microcontrollers, manufactured by TEXAS INSTRUMENTS may also be suitable.

[0466] In one form of the present technology, the central controller 4230 is a dedicated electronic circuit.

[0467] In one form, the central controller 4230 is an application-specific integrated circuit. In another form, the central controller 4230 comprises discrete electronic components.

[0468] The central controller 4230 may be configured to receive input signal(s) from one or more transducers 4270, one or more input devices 4220, and the humidifier 5000.

[0469] The central controller 4230 may be configured to provide output signal(s) to one or more of an output device 4290, a therapy device controller 4240, a data communication interface 4280, and the humidifier 5000.

[0470] In some forms of the present technology, the central controller 4230 is configured to implement the one or more methodologies described herein, such as the one or more algorithms expressed as computer programs stored in a non-transitory computer readable storage medium, such as memory 4260. In some forms of the present technology, the central controller 4230 may be integrated with an RPT device 4000. However, in some forms of the present technology, some methodologies may be performed by a remotely located device. For example, the remotely located device may determine control settings for a ventilator or detect respiratory related events by analysis of stored data such as from any of the sensors described herein.

5.4.2.4 Clock

[0471] The RPT device 4000 may include a clock 4232 that is connected to the central controller 4230.

5.4.2.5 Therapy device controller

[0472] In one form of the present technology, therapy device controller 4240 is a therapy control module that forms part of the algorithms executed by the central controller 4230.

[0473] In one form of the present technology, therapy device controller 4240 is a dedicated motor control integrated circuit. For example, in one form a MC33035 brushless DC motor controller, manufactured by ONSEMI is used.

5.4.2.6 Protection circuits

[0474] The one or more protection circuits 4250 in accordance with the present technology may comprise an electrical protection circuit, a temperature and/or pressure safety circuit.

5.4.2.7 Memory

[0475] In accordance with one form of the present technology the RPT device 4000 includes memory 4260, e.g., non-volatile memory. In some forms, memory 4260 may include battery powered static RAM. In some forms, memory 4260 may include volatile RAM.

[0476] Memory 4260 may be located on the PCBA 4202. Memory 4260 may be in the form of EEPROM, or NAND flash.

[0477] Additionally or alternatively, RPT device 4000 includes a removable form of memory 4260, for example a memory card made in accordance with the Secure Digital (SD) standard.

[0478] In one form of the present technology, the memory 4260 acts as a non-transitory computer readable storage medium on which is stored computer program instructions expressing the one or more methodologies described herein, such as the one or more algorithms.

5.4.2.8 Data communication systems

[0479] In one form of the present technology, a data communication interface 4280 is provided, and is connected to the central controller 4230. Data communication interface 4280 may be connectable to a remote external communication network 4282 and/or a local external communication network 4284. The remote external communication network 4282 may be connectable to a remote external device 4286. The local external communication network 4284 may be connectable to a local external device 4288.

[0480] In one form, data communication interface 4280 is part of the central controller 4230. In another form, data communication interface 4280 is separate from the central controller 4230, and may comprise an integrated circuit or a processor.

[0481] In one form, remote external communication network 4282 is the Internet. The data communication interface 4280 may use wired communication (e.g. via Ethernet, or optical fibre) or a wireless protocol (e.g. CDMA, GSM, LTE) to connect to the Internet.

[0482] In one form, local external communication network 4284 utilises one or more communication standards, such as Bluetooth, or a consumer infrared protocol.

[0483] In one form, remote external device 4286 is one or more computers, for example a cluster of networked computers. In one form, remote external device 4286 may be virtual computers, rather than physical computers. In either case, such a remote external device 4286 may be accessible to an appropriately authorised person such as a clinician.

[0484] The local external device 4288 may be a personal computer, mobile phone, tablet or remote control.

5.4.2.9 Output devices including optional display, alarms

[0485] An output device 4290 in accordance with the present technology may take the form of one or more of a visual, audio and haptic unit. A visual display may be a Liquid Crystal Display (LCD) or Light Emitting Diode (LED) display.

5.4.2.9.1 Display driver

[0486] A display driver 4292 receives as an input the characters, symbols, or images intended for display on the display 4294, and converts them to commands that cause the display 4294 to display those characters, symbols, or images.

5.4.2.9.2 Display

[0487] A display 4294 is configured to visually display characters, symbols, or images in response to commands received from the display driver 4292. For example, the display 4294 may be an eight-segment display, in which case the display driver 4292 converts each character or symbol, such as the figure "0", to eight logical signals

indicating whether the eight respective segments are to be activated to display a particular character or symbol.

5.5 AIR CIRCUIT

[0488] An air circuit 4170 in accordance with an aspect of the present technology is a conduit or a tube constructed and arranged to allow, in use, a flow of air to travel between two components such as RPT device 4000 and the patient interface 3000.

[0489] In particular, the air circuit 4170 may be in fluid connection with the outlet of the pneumatic block 4020 and the patient interface. The air circuit may be referred to as an air delivery tube. In some cases there may be separate limbs of the circuit for inhalation and exhalation. In other cases a single limb is used.

[0490] In some forms, the air circuit 4170 may comprise one or more heating elements configured to heat air in the air circuit, for example to maintain or raise the temperature of the air. The heating element may be in a form of a heated wire circuit, and may comprise one or more transducers, such as temperature sensors. In one form, the heated wire circuit may be helically wound around the axis of the air circuit 4170. The heating element may be in communication with a controller such as a central controller 4230. One example of an air circuit 4170 comprising a heated wire circuit is described in United States Patent 8,733,349, which is incorporated herewithin in its entirety by reference.

5.5.1 Oxygen delivery

[0491] In one form of the present technology, supplemental oxygen 4180 is delivered to one or more points in the pneumatic path, such as upstream of the pneumatic block 4020, to the air circuit 4170 and/or to the patient interface 3000.

5.6 HUMIDIFIER

5.6.1 Humidifier overview

[0492] In one form of the present technology there is provided a humidifier 5000 (e.g. as shown in Fig. 5A) to change the absolute humidity of air or gas for delivery to a patient relative to ambient air. Typically, the humidifier 5000 is used to increase the

absolute humidity and increase the temperature of the flow of air (relative to ambient air) before delivery to the patient's airways.

[0493] The humidifier 5000 may comprise a humidifier reservoir 5110, a humidifier inlet 5002 to receive a flow of air, and a humidifier outlet 5004 to deliver a humidified flow of *air*. In some forms, as shown in Fig. 5A and Fig. 5B, an inlet and an outlet of the humidifier reservoir 5110 may be the humidifier inlet 5002 and the humidifier outlet 5004 respectively. The humidifier 5000 may further comprise a humidifier base 5006, which may be adapted to receive the humidifier reservoir 5110 and comprise a heating element 5240.

5.6.2 Humidifier components

5.6.2.1 Water reservoir

[0494] According to one arrangement, the humidifier 5000 may comprise a water reservoir 5110 configured to hold, or retain, a volume of liquid (e.g. water) to be evaporated for humidification of the flow of air. The water reservoir 5110 may be configured to hold a predetermined maximum volume of water in order to provide adequate humidification for at least the duration of a respiratory therapy session, such as one evening of sleep. Typically, the reservoir 5110 is configured to hold several hundred millilitres of water, e.g. 300 millilitres (ml), 325 ml, 350 ml or 400 ml. In other forms, the humidifier 5000 may be configured to receive a supply of water from an external water source such as a building's water supply system.

[0495] According to one aspect, the water reservoir 5110 is configured to add humidity to a flow of air from the RPT device 4000 as the flow of air travels therethrough. In one form, the water reservoir 5110 may be configured to encourage the flow of air to travel in a tortuous path through the reservoir 5110 while in contact with the volume of water therein.

[0496] According to one form, the reservoir 5110 may be removable from the humidifier 5000, for example in a lateral direction as shown in Fig. 5A and Fig. 5B.

[0497] The reservoir 5110 may also be configured to discourage egress of liquid therefrom, such as when the reservoir 5110 is displaced and/or rotated from its normal, working orientation, such as through any apertures and/or in between its sub-

components. As the flow of air to be humidified by the humidifier 5000 is typically pressurised, the reservoir 5110 may also be configured to prevent losses in pneumatic pressure through leak and/or flow impedance.

5.6.2.2 Conductive portion

[0498] According to one arrangement, the reservoir 5110 comprises a conductive portion 5120 configured to allow efficient transfer of heat from the heating element 5240 to the volume of liquid in the reservoir 5110. In one form, the conductive portion 5120 may be arranged as a plate, although other shapes may also be suitable. All or a part of the conductive portion 5120 may be made of a thermally conductive material such as aluminium (e.g. approximately 2 mm thick, such as 1 mm, 1.5 mm, 2.5 mm or 3 mm), another heat conducting metal or some plastics. In some cases, suitable heat conductivity may be achieved with less conductive materials of suitable geometry.

5.6.2.3 Humidifier reservoir dock

[0499] In one form, the humidifier 5000 may comprise a humidifier reservoir dock 5130 (as shown in Fig. 5B) configured to receive the humidifier reservoir 5110. In some arrangements, the humidifier reservoir dock 5130 may comprise a locking feature such as a locking lever 5135 configured to retain the reservoir 5110 in the humidifier reservoir dock 5130.

5.6.2.4 Water level indicator

[0500] The humidifier reservoir 5110 may comprise a water level indicator 5150 as shown in Fig. 5A-5B. In some forms, the water level indicator 5150 may provide one or more indications to a user such as the patient 1000 or a care giver regarding a quantity of the volume of water in the humidifier reservoir 5110. The one or more indications provided by the water level indicator 5150 may include an indication of a maximum, predetermined volume of water, any portions thereof, such as 25%, 50% or 75% or volumes such as 200 ml, 300 ml or 400ml.

5.6.2.5 Humidifier transducer(s)

[0501] The humidifier 5000 may comprise one or more humidifier transducers (sensors) 5210 instead of, or in addition to, transducers 4270 described above. Humidifier transducers 5210 may include one or more of an air pressure sensor 5212,

an *air* flow rate transducer 5214, a temperature sensor 5216, or a humidity sensor 5218 as shown in Fig. 5C. A humidifier transducer 5210 may produce one or more output signals which may be communicated to a controller such as the central controller 4230 and/or the humidifier controller 5250. In some forms, a humidifier transducer may be located externally to the humidifier 5000 (such as in the *air* circuit 4170) while communicating the output signal to the controller.

5.6.2.5.1 Pressure transducer

[0502] One or more pressure transducers 5212 may be provided to the humidifier 5000 in addition to, or instead of, a pressure sensor 4272 provided in the RPT device 4000.

5.6.2.5.2 Flow rate transducer

[0503] One or more flow rate transducers 5214 may be provided to the humidifier 5000 in addition to, or instead of, a flow rate sensor 4274 provided in the RPT device 4000.

5.6.2.5.3 Temperature transducer

[0504] The humidifier 5000 may comprise one or more temperature transducers 5216. The one or more temperature transducers 5216 may be configured to measure one or more temperatures such as of the heating element 5240 and/or of the flow of *air* downstream of the humidifier outlet 5004. In some forms, the humidifier 5000 may further comprise a temperature sensor 5216 to detect the temperature of the ambient air.

5.6.2.5.4 Humidity transducer

[0505] In one form, the humidifier 5000 may comprise one or more humidity sensors 5218 to detect a humidity of a gas, such as the ambient air. The humidity sensor 5218 may be placed towards the humidifier outlet 5004 in some forms to measure a humidity of the gas delivered from the humidifier 5000. The humidity sensor may be an absolute humidity sensor or a relative humidity sensor.

5.6.2.6 Heating element

[0506] A heating element 5240 may be provided to the humidifier 5000 in some cases to provide a heat input to one or more of the volume of water in the humidifier

reservoir 5110 and/or to the flow of air. The heating element 5240 may comprise a heat generating component such as an electrically resistive heating track. One suitable example of a heating element 5240 is a layered heating element such as one described in the PCT Patent Application Publication No. WO 2012/171072, which is incorporated herewith by reference in its entirety.

[0507] In some forms, the heating element 5240 may be provided in the humidifier base 5006 where heat may be provided to the humidifier reservoir 5110 primarily by conduction as shown in Fig. 5B.

5.6.2.7 Humidifier controller

[0508] According to one arrangement of the present technology, a humidifier 5000 may comprise a humidifier controller 5250 as shown in Fig. 5C. In one form, the humidifier controller 5250 may be a part of the central controller 4230. In another form, the humidifier controller 5250 may be a separate controller, which may be in communication with the central controller 4230.

[0509] In one form, the humidifier controller 5250 may receive as inputs measures of properties (such as temperature, humidity, pressure and/or flow rate), for example of the flow of air, the water in the reservoir 5110 and/or the humidifier 5000. The humidifier controller 5250 may also be configured to execute or implement humidifier algorithms and/or deliver one or more output signals.

[0510] As shown in Fig. 5C, the humidifier controller 5250 may comprise one or more controllers, such as a central humidifier controller 5251, a heated air circuit controller 5254 configured to control the temperature of a heated air circuit 4170 and/or a heating element controller 5252 configured to control the temperature of a heating element 5240.

5.7 BREATHING WAVEFORMS

[0511] Fig. 6A shows a model typical breath waveform of a person while sleeping. The horizontal axis is time, and the vertical axis is respiratory flow rate. While the parameter values may vary, a typical breath may have the following approximate values: tidal volume Vt 0.5L, inhalation time Ti 1.6s, peak inspiratory flow rate Qpeak 0.4 L/s, exhalation time Te 2.4s, peak expiratory flow rate Qpeak -

0.5 L/s. The total duration of the breath, Ttot, is about 4s. The person typically breathes at a rate of about 15 breaths per minute (BPM), with Ventilation Vent about 7.5 L/min. A typical duty cycle, the ratio of Ti to Ttot, is about 40%.

5.8 GLOSSARY

[0512] For the purposes of the present technology disclosure, in certain forms of the present technology, one or more of the following definitions may apply. In other forms of the present technology, alternative definitions may apply.

5.8.1 General

[0513] Air: In certain forms of the present technology, air may be taken to mean atmospheric air, and in other forms of the present technology air may be taken to mean some other combination of breathable gases, e.g. atmospheric air enriched with oxygen.

[0514] Ambient: In certain forms of the present technology, the term ambient will be taken to mean (i) external of the treatment system or patient, and (ii) immediately surrounding the treatment system or patient.

[0515] For example, ambient humidity with respect to a humidifier may be the humidity of air immediately surrounding the humidifier, e.g. the humidity in the room where a patient is sleeping. Such ambient humidity may be different to the humidity outside the room where a patient is sleeping.

[0516] In another example, ambient pressure may be the pressure immediately surrounding or external to the body.

[0517] In certain forms, ambient (e.g., acoustic) noise may be considered to be the background noise level in the room where a patient is located, other than for example, noise generated by an RPT device or emanating from a mask or patient interface. Ambient noise may be generated by sources outside the room.

[0518] Automatic Positive Airway Pressure (APAP) therapy: CPAP therapy in which the treatment pressure is automatically adjustable, e.g. from breath to breath, between minimum and maximum limits, depending on the presence or absence of indications of SDB events.

[0519] Continuous Positive Airway Pressure (CPAP) therapy: Respiratory pressure therapy in which the treatment pressure is approximately constant through a respiratory cycle of a patient. In some forms, the pressure at the entrance to the airways will be slightly higher during exhalation, and slightly lower during inhalation. In some forms, the pressure will vary between different respiratory cycles of the patient, for example, being increased in response to detection of indications of partial upper airway obstruction, and decreased in the absence of indications of partial upper airway obstruction.

[0520] Flow rate: The volume (or mass) of air delivered per unit time. Flow rate may refer to an instantaneous quantity. In some cases, a reference to flow rate will be a reference to a scalar quantity, namely a quantity having magnitude only. In other cases, a reference to flow rate will be a reference to a vector quantity, namely a quantity having both magnitude and direction. Flow rate may be given the symbol *Q*. 'Flow rate' is sometimes shortened to simply 'flow' or 'airflow'.

[0521] In the example of patient respiration, a flow rate may be nominally positive for the inspiratory portion of a breathing cycle of a patient, and hence negative for the expiratory portion of the breathing cycle of a patient. Total flow rate, *Qt*, is the flow rate of air leaving the RPT device. Vent flow rate, *Qv*, is the flow rate of air leaving a vent to allow washout of exhaled gases. Leak flow rate, *Ql*, is the flow rate of leak from a patient interface system or elsewhere. Respiratory flow rate, *Qr*, is the flow rate of air that is received into the patient's respiratory system.

[0522] Humidifier: The word humidifier will be taken to mean a humidifying apparatus constructed and arranged, or configured with a physical structure to be capable of providing a therapeutically beneficial amount of water (H_2O) vapour to a flow of air to ameliorate a medical respiratory condition of a patient.

[0523] Leak: The word leak will be taken to be an unintended flow of air. In one example, leak may occur as the result of an incomplete seal between a mask and a patient's face. In another example leak may occur in a swivel elbow to the ambient.

[0524] Noise, conducted (acoustic): Conducted noise in the present document refers to noise which is carried to the patient by the pneumatic path, such as the air

circuit and the patient interface as well as the air therein. In one form, conducted noise may be quantified by measuring sound pressure levels at the end of an air circuit.

[0525] Noise, radiated (acoustic): Radiated noise in the present document refers to noise which is carried to the patient by the ambient air. In one form, radiated noise may be quantified by measuring sound power/pressure levels of the object in question according to ISO 3744.

[0526] Noise, vent (acoustic): Vent noise in the present document refers to noise which is generated by the flow of air through any vents such as vent holes of the patient interface.

[0527] Patient: A person, whether or not they are suffering from a respiratory condition.

[0528] Pressure: Force per unit area. Pressure may be expressed in a range of units, including cmH_2O, g-f/cm^2 and hectopascal. 1 cmH_2O is equal to 1 g-f/cm^2 and is approximately 0.98 hectopascal. In this specification, unless otherwise stated, pressure is given in units of cmH_2O.

[0529] The pressure in the patient interface is given the symbol *Pm*, while the treatment pressure, which represents a target value to be achieved by the mask pressure *Pm* at the current instant of time, is given the symbol *Pt*.

[0530] Respiratory Pressure Therapy (RPT): The application of a supply of air to an entrance to the airways at a treatment pressure that is typically positive with respect to atmosphere.

[0531] Ventilator: A mechanical device that provides pressure support to a patient to perform some or all of the work of breathing.

5.8.1.1 Materials

[0532] Silicone or Silicone Elastomer: A synthetic rubber. In this specification, a reference to silicone is a reference to liquid silicone rubber (LSR) or a compression moulded silicone rubber (CMSR). One form of commercially available LSR is SILASTIC (included in the range of products sold under this trademark), manufactured by Dow Corning. Another manufacturer of LSR is Wacker. Unless

otherwise specified to the contrary, an exemplary form of LSR has a Shore A (or Type A) indentation hardness in the range of about 35 to about 45 as measured using ASTM D2240.

[0533] Polycarbonate: a thermoplastic polymer of Bisphenol-A Carbonate.

5.8.1.2 Mechanical properties

[0534] Resilience: Ability of a material to absorb energy when deformed elastically and to release the energy upon unloading.

[0535] Resilient: Will release substantially all of the energy when unloaded. Includes e.g. certain silicones, and thermoplastic elastomers.

[0536] Hardness: The ability of a material *per se* to resist deformation (e.g. described by a Young's Modulus, or an indentation *hardness* scale measured on a standardised sample size).

- 'Soft' materials may include silicone or thermo-plastic elastomer (TPE), and may, e.g. readily deform under finger pressure.
- 'Hard' materials may include polycarbonate, polypropylene, steel or aluminium, and may not e.g. readily deform under finger pressure.

[0537] Stiffness (or rigidity) of a structure or component: The ability of the structure or component to resist deformation in response to an applied load. The load may be a force or a moment, e.g. compression, tension, bending or torsion. The structure or component may offer different resistances in different directions.

[0538] Floppy structure or component: A structure or component that will change shape, e.g. bend, when caused to support its own weight, within a relatively short period of time such as 1 second.

[0539] Rigid structure or component: A structure or component that will not substantially change shape when subject to the loads typically encountered in use. An example of such a use may be setting up and maintaining a patient interface in sealing relationship with an entrance to a patient's airways, e.g. at a load of approximately 20 to 30 cmH_2O pressure.

[0540] As an example, an I-beam may comprise a different bending stiffness (resistance to a bending load) in a first direction in comparison to a second, orthogonal direction. In another example, a structure or component may be floppy in a first direction and rigid in a second direction.

5.8.2 Respiratory cycle

[0541] Apnea: According to some definitions, an apnea is said to have occurred when flow falls below a predetermined threshold for a duration, e.g. 10 seconds. An obstructive apnea will be said to have occurred when, despite patient effort, some obstruction of the airway does not allow air to flow. A central apnea will be said to have occurred when an apnea is detected that is due to a reduction in breathing effort, or the absence of breathing effort, despite the airway being patent. A mixed apnea occurs when a reduction or absence of breathing effort coincides with an obstructed airway.

[0542] Breathing rate: The rate of spontaneous respiration of a patient, usually measured in breaths per minute.

[0543] Duty cycle: The ratio of inhalation time, Ti to total breath time, Ttot.

[0544] Effort (breathing): The work done by a spontaneously breathing person attempting to breathe.

[0545] Expiratory portion of a breathing cycle*:* The period from the start of expiratory flow to the start of inspiratory flow.

[0546] Flow limitation: Flow limitation will be taken to be the state of affairs in a patient's respiration where an increase in effort by the patient does not give rise to a corresponding increase in flow. Where flow limitation occurs during an inspiratory portion of the breathing cycle it may be described as inspiratory flow limitation. Where flow limitation occurs during an expiratory portion of the breathing cycle it may be described as expiratory flow limitation.

[0547] Types of flow limited inspiratory waveforms:

(i) Flattened: Having a rise followed by a relatively flat portion, followed by a fall.

(ii) M-shaped: Having two local peaks, one at the leading edge, and one at the trailing edge, and a relatively flat portion between the two peaks.

(iii) Chair-shaped: Having a single local peak, the peak being at the leading edge, followed by a relatively flat portion.

(iv) Reverse-chair shaped: Having a relatively flat portion followed by single local peak, the peak being at the trailing edge.

[0548] Hypopnea: According to some definitions, a hypopnea is taken to be a reduction in flow, but not a cessation of flow. In one form, a hypopnea may be said to have occurred when there is a reduction in flow below a threshold rate for a duration. A central hypopnea will be said to have occurred when a hypopnea is detected that is due to a reduction in breathing effort. In one form in adults, either of the following may be regarded as being hypopneas:

(i) a 30% reduction in patient breathing for at least 10 seconds plus an associated 4% desaturation; or

(ii) a reduction in patient breathing (but less than 50%) for at least 10 seconds, with an associated desaturation of at least 3% or an arousal.

[0549] Hyperpnea: An increase in flow to a level higher than normal.

[0550] Inspiratory portion of a breathing cycle: The period from the start of inspiratory flow to the start of expiratory flow will be taken to be the inspiratory portion of a breathing cycle.

[0551] Patency (airway): The degree of the airway being open, or the extent to which the airway is open. A *patent* airway is open. Airway patency may be quantified, for example with a value of one (1) being patent, and a value of zero (0), being closed (obstructed).

[0552] Positive End-Expiratory Pressure (PEEP): The pressure above atmosphere in the lungs that exists at the end of expiration.

[0553] Peak flow rate (Qpeak): The maximum value of flow rate during the inspiratory portion of the respiratory flow waveform.

[0554] Respiratory flow rate, patient airflow rate, respiratory airflow rate (Qr): These terms may be understood to refer to the RPT device's estimate of respiratory flow rate, as opposed to "true respiratory flow rate" or "true respiratory flow rate", which is the actual respiratory flow rate experienced by the patient, usually expressed in litres per minute.

[0555] Tidal volume (Vt): The volume of air inhaled or exhaled during normal breathing, when extra effort is not applied. In principle the inspiratory volume Vi (the volume of air inhaled) is equal to the expiratory volume Ve (the volume of air exhaled), and therefore a single tidal volume Vt may be defined as equal to either quantity. In practice the tidal volume Vt is estimated as some combination, e.g. the mean, of the inspiratory volume Vi and the expiratory volume Ve.

[0556] (inhalation) Time (Ti): The duration of the inspiratory portion of the respiratory flow rate waveform.

[0557] (exhalation) Time (Te): The duration of the expiratory portion of the respiratory flow rate waveform.

[0558] (total) Time (Ttot): The total duration between the start of one inspiratory portion of a respiratory flow rate waveform and the start of the following inspiratory portion of the respiratory flow rate waveform.

[0559] Typical recent ventilation: The value of ventilation around which recent values of ventilation Vent over some predetermined timescale tend to cluster, that is, a measure of the central tendency of the recent values of ventilation.

[0560] Upper airway obstruction (UAO): includes both partial and total upper airway obstruction. This may be associated with a state of flow limitation, in which the flow rate increases only slightly or may even decrease as the pressure difference across the upper airway increases (Starling resistor behaviour).

[0561] Ventilation (Vent): A measure of a rate of gas being exchanged by the patient's respiratory system. Measures of ventilation may include one or both of inspiratory and expiratory flow, per unit time. When expressed as a volume per

minute, this quantity is often referred to as "minute ventilation". Minute ventilation is sometimes given simply as a volume, understood to be the volume per minute.

5.8.3 Ventilation

[0562] Adaptive Servo-Ventilator (ASV): A servo-ventilator that has a changeable, rather than fixed target ventilation. The changeable target ventilation may be learned from some characteristic of the patient, for example, a respiratory characteristic of the patient.

[0563] Backup rate: A parameter of a ventilator that establishes the minimum breathing rate (typically in number of breaths per minute) that the ventilator will deliver to the patient, if not triggered by spontaneous respiratory effort.

[0564] Cycled: The termination of a ventilator's inspiratory phase. When a ventilator delivers a breath to a spontaneously breathing patient, at the end of the inspiratory portion of the breathing cycle, the ventilator is said to be cycled to stop delivering the breath.

[0565] Expiratory positive airway pressure (EPAP): a base pressure, to which a pressure varying within the breath is added to produce the desired mask pressure which the ventilator will attempt to achieve at a given time.

[0566] End expiratory pressure (EEP): Desired mask pressure which the ventilator will attempt to achieve at the end of the expiratory portion of the breath. If the pressure waveform template □(□) is zero-valued at the end of expiration, i.e. □(□) = 0 when □ = 1, the EEP is equal to the EPAP.

[0567] Inspiratory positive airway pressure (IPAP): Maximum desired mask pressure which the ventilator will attempt to achieve during the inspiratory portion of the breath.

[0568] Pressure support: A number that is indicative of the increase in pressure during ventilator inspiration over that during ventilator expiration, and generally means the difference in pressure between the maximum value during inspiration and the base pressure (e.g., $PS = IPAP - EPAP$). In some contexts pressure support

means the difference which the ventilator aims to achieve, rather than what it actually achieves.

[0569] Servo-ventilator: A ventilator that measures patient ventilation, has a target ventilation, and which adjusts the level of pressure support to bring the patient ventilation towards the target ventilation.

[0570] Spontaneous/Timed (S/T): A mode of a ventilator or other device that attempts to detect the initiation of a breath of a spontaneously breathing patient. If however, the device is unable to detect a breath within a predetermined period of time, the device will automatically initiate delivery of the breath.

[0571] Swing: Equivalent term to pressure support.

[0572] Triggered: When a ventilator delivers a breath of *air* to a spontaneously breathing patient, it is said to be triggered to do so at the initiation of the respiratory portion of the breathing cycle by the patient's efforts.

5.8.4 Anatomy

5.8.4.1 Anatomy of the face

[0573] Ala*:* the external outer wall or "wing" of each nostril (plural: alar)

[0574] Alare*:* The most lateral point on the nasal *ala*.

[0575] Alar curvature (or alar crest) point: The most posterior point in the curved base line of each *ala*, found in the crease formed by the union of the *ala* with the cheek.

[0576] Auricle*:* The whole external visible part of the ear.

[0577] (nose) Bony framework*:* The bony framework of the nose comprises the nasal bones, the frontal process of the maxillae and the nasal part of the frontal bone.

[0578] (nose) Cartilaginous framework: The cartilaginous framework of the nose comprises the septal, lateral, major and minor cartilages.

[0579] Columella*:* the strip of skin that separates the nares and which runs from the pronasale to the upper lip.

[0580] Columella angle*:* The angle between the line drawn through the midpoint of the nostril aperture and a line drawn perpendicular to the Frankfort horizontal while intersecting subnasale.

[0581] Frankfort horizontal plane: A line extending from the most inferior point of the orbital margin to the left tragion. The tragion is the deepest point in the notch superior to the tragus of the auricle.

[0582] Glabella*:* Located on the soft tissue, the most prominent point in the midsagittal plane of the forehead.

[0583] Lateral nasal cartilage: A generally triangular plate of cartilage. Its superior margin is attached to the nasal bone and frontal process of the maxilla, and its inferior margin is connected to the greater alar cartilage.

[0584] Greater alar cartilage: A plate of cartilage lying below the lateral nasal cartilage. It is curved around the anterior part of the naris. Its posterior end is connected to the frontal process of the maxilla by a tough fibrous membrane containing three or four minor cartilages of the *ala*.

[0585] Nares (Nostrils): Approximately ellipsoidal apertures forming the entrance to the nasal cavity. The singular form of nares is naris (nostril). The nares are separated by the nasal septum.

[0586] Naso-labial sulcus or Naso-labial fold: The skin fold or groove that runs from each side of the nose to the corners of the mouth, separating the cheeks from the upper lip.

[0587] Naso-labial angle: The angle between the columella and the upper lip, while intersecting subnasale.

[0588] Otobasion inferior: The lowest point of attachment of the auricle to the skin of the face.

[0589] Otobasion superior: The highest point of attachment of the auricle to the skin of the face.

[0590] Pronasale*:* the most protruded point or tip of the nose, which can be identified in lateral view of the rest of the portion of the head.

[0591] Philtrum*:* the midline groove that runs from lower border of the nasal septum to the top of the lip in the upper lip region.

[0592] Pogonion*:* Located on the soft tissue, the most anterior midpoint of the chin.

[0593] Ridge (nasal): The nasal ridge is the midline prominence of the nose, extending from the Sellion to the Pronasale.

[0594] Sagittal plane: A vertical plane that passes from anterior (front) to posterior (rear). The midsagittal plane is a sagittal plane that divides the body into right and left halves.

[0595] Sellion*:* Located on the soft tissue, the most concave point overlying the area of the frontonasal suture.

[0596] Septal cartilage (nasal): The nasal septal cartilage forms part of the septum and divides the front part of the nasal cavity.

[0597] Subalare: The point at the lower margin of the alar base, where the alar base joins with the skin of the superior (upper) lip.

[0598] *Subnasal point*: Located on the soft tissue, the point at which the columella merges with the upper lip in the midsagittal plane.

[0599] Supramenton: The point of greatest concavity in the midline of the lower lip between labrale inferius and soft tissue pogonion

5.8.4.2 Anatomy of the skull

[0600] Frontal bone: The frontal bone includes a large vertical portion, the *squama frontalis*, corresponding to the region known as the forehead.

[0601] Mandible: The mandible forms the lower jaw. The mental protuberance is the bony protuberance of the jaw that forms the chin.

[0602] Maxilla: The maxilla forms the upper jaw and is located above the mandible and below the orbits. The *frontal process of the maxilla* projects upwards by the side of the nose, and forms part of its lateral boundary.

[0603] Nasal bones: The nasal bones are two small oblong bones, varying in size and form in different individuals; they are placed side by side at the middle and upper part of the face, and form, by their junction, the "bridge" of the nose.

[0604] Nasion*:* The intersection of the frontal bone and the two nasal bones, a depressed area directly between the eyes and superior to the bridge of the nose.

[0605] Occipital bone: The occipital bone is situated at the back and lower part of the cranium. It includes an oval aperture, the *foramen magnum*, through which the cranial cavity communicates with the vertebral canal. The curved plate behind the foramen magnum is the *squama occipitalis*.

[0606] Orbit: The bony cavity in the skull to contain the eyeball.

[0607] Parietal bones: The parietal bones are the bones that, when joined together, form the roof and sides of the cranium.

[0608] Temporal bones: The temporal bones are situated on the bases and sides of the skull, and support that part of the face known as the temple.

[0609] Zygomatic bones: The face includes two zygomatic bones, located in the upper and lateral parts of the face and forming the prominence of the cheek.

5.8.4.3 Anatomy of the respiratory system

[0610] Diaphragm*:* A sheet of muscle that extends across the bottom of the rib cage. The diaphragm separates the thoracic cavity, containing the heart, lungs and ribs, from the abdominal cavity. As the diaphragm contracts the volume of the thoracic cavity increases and air is drawn into the lungs.

[0611] Larynx: The larynx, or voice box houses the vocal folds and connects the inferior part of the pharynx (hypopharynx) with the trachea.

[0612] Lungs: The organs of respiration in humans. The conducting zone of the lungs contains the trachea, the bronchi, the bronchioles, and the terminal bronchioles. The respiratory zone contains the respiratory bronchioles, the alveolar ducts, and the alveoli.

[0613] Nasal cavity: The nasal cavity (or nasal fossa) is a large air filled space above and behind the nose in the middle of the face. The nasal cavity is divided in two by a vertical fin called the nasal septum. On the sides of the nasal cavity are three horizontal outgrowths called nasal conchae (singular "concha") or turbinates. To the front of the nasal cavity is the nose, while the back blends, via the choanae, into the nasopharynx.

[0614] Pharynx: The part of the throat situated immediately inferior to (below) the nasal cavity, and superior to the oesophagus and larynx. The pharynx is conventionally divided into three sections: the nasopharynx (epipharynx) (the nasal part of the pharynx), the oropharynx (mesopharynx) (the oral part of the pharynx), and the laryngopharynx (hypopharynx).

5.8.5 Patient interface

[0615] Anti-asphyxia valve (AAV): The component or sub-assembly of a mask system that, by opening to atmosphere in a failsafe manner, reduces the risk of excessive CO_2 rebreathing by a patient.

[0616] Elbow: An elbow is an example of a structure that directs an axis of flow of air travelling therethrough to change direction through an angle. In one form, the angle may be approximately 90 degrees. In another form, the angle may be more, or less than 90 degrees. The elbow may have an approximately circular cross-section. In another form the elbow may have an oval or a rectangular cross-section. In certain forms an elbow may be rotatable with respect to a mating component, e.g. about 360 degrees. In certain forms an elbow may be removable from a mating component, e.g. via a snap connection. In certain forms, an elbow may be assembled to a mating component via a one-time snap during manufacture, but not removable by a patient.

[0617] Frame: Frame will be taken to mean a mask structure that bears the load of tension between two or more points of connection with a headgear. A mask frame

may be a non-airtight load bearing structure in the mask. However, some forms of mask frame may also be air-tight.

[0618] Headgear: Headgear will be taken to mean a form of positioning and stabilizing structure designed for use on a head. For example the headgear may comprise a collection of one or more struts, ties and stiffeners configured to locate and retain a patient interface in position on a patient's face for delivery of respiratory therapy. Some ties are formed of a soft, flexible, elastic material such as a laminated composite of foam and fabric.

[0619] Membrane: Membrane will be taken to mean a typically thin element that has, preferably, substantially no resistance to bending, but has resistance to being stretched.

[0620] Plenum chamber: a mask plenum chamber will be taken to mean a portion of a patient interface having walls at least partially enclosing a volume of space, the volume having air therein pressurised above atmospheric pressure in use. A shell may form part of the walls of a mask plenum chamber.

[0621] Seal: May be a noun form ("a seal") which refers to a structure, or a verb form ("to seal") which refers to the effect. Two elements may be constructed and/or arranged to 'seal' or to effect 'sealing' therebetween without requiring a separate 'seal' element *per se*.

[0622] Shell: A shell will be taken to mean a curved, relatively thin structure having bending, tensile and compressive stiffness. For example, a curved structural wall of a mask may be a shell. In some forms, a shell may be faceted. In some forms a shell may be airtight. In some forms a shell may not be airtight.

[0623] Stiffener: A stiffener will be taken to mean a structural component designed to increase the bending resistance of another component in at least one direction.

[0624] Strut: A strut will be taken to be a structural component designed to increase the compression resistance of another component in at least one direction.

[0625] Swivel (noun): A subassembly of components configured to rotate about a common axis, preferably independently, preferably under low torque. In one form, the swivel may be constructed to rotate through an angle of at least 360 degrees. In another form, the swivel may be constructed to rotate through an angle less than 360 degrees. When used in the context of an air delivery conduit, the sub-assembly of components preferably comprises a matched pair of cylindrical conduits. There may be little or no leak flow of air from the swivel in use.

[0626] Tie (noun): A structure designed to resist tension.

[0627] Vent: (noun): A structure that allows a flow of *air* from an interior of the mask, or conduit, to ambient air for clinically effective washout of exhaled gases. For example, a clinically effective washout may involve a flow rate of about 10 litres per minute to about 100 litres per minute, depending on the mask design and treatment pressure.

5.8.6 Shape of structures

[0628] Products in accordance with the present technology may comprise one or more three-dimensional mechanical structures, for example a mask cushion or an impeller. The three-dimensional structures may be bounded by two-dimensional surfaces. These surfaces may be distinguished using a label to describe an associated surface orientation, location, function, or some other characteristic. For example a structure may comprise one or more of an anterior surface, a posterior surface, an interior surface and an exterior surface. In another example, a seal-forming structure may comprise a face-contacting (e.g. outer) surface, and a separate non-face-contacting (e.g. underside or inner) surface. In another example, a structure may comprise a first surface and a second surface.

[0629] To facilitate describing the shape of the three-dimensional structures and the surfaces, we first consider a cross-section through a surface of the structure at a point, *p*. See Fig. 3B to Fig. 3F, which illustrate examples of cross-sections at point *p* on a surface, and the resulting plane curves. Figs. 3B to 3F also illustrate an outward normal vector at *p*. The outward normal vector at *p* points away from the surface. In some examples we describe the surface from the point of view of an imaginary small person standing upright on the surface.

5.8.6.1 Curvature in one dimension

[0630] The curvature of a plane curve at p may be described as having a sign (e.g. positive, negative) and a magnitude (e.g. 1/radius of a circle that just touches the curve at p).

[0631] *Positive curvature:* If the curve at p turns towards the outward normal, the curvature at that point will be taken to be positive (if the imaginary small person leaves the point p they must walk uphill). See Fig. 3B (relatively large positive curvature compared to Fig. 3C) and Fig. 3C (relatively small positive curvature compared to Fig. 3B). Such curves are often referred to as concave.

[0632] *Zero curvature:* If the curve at p is a straight line, the curvature will be taken to be zero (if the imaginary small person leaves the point p, they can walk on a level, neither up nor down). See Fig. 3D.

[0633] *Negative curvature:* If the curve at p turns away from the outward normal, the curvature in that direction at that point will be taken to be negative (if the imaginary small person leaves the point p they must walk downhill). See Fig. 3E (relatively small negative curvature compared to Fig. 3F) and Fig. 3F (relatively large negative curvature compared to Fig. 3E). Such curves are often referred to as convex.

5.8.6.2 Curvature of two dimensional surfaces

[0634] A description of the shape at a given point on a two-dimensional surface in accordance with the present technology may include multiple normal cross-sections. The multiple cross-sections may cut the surface in a plane that includes the outward normal (a "normal plane"), and each cross-section may be taken in a different direction. Each cross-section results in a plane curve with a corresponding curvature. The different curvatures at that point may have the same sign, or a different sign. Each of the curvatures at that point has a magnitude, e.g. relatively small. The plane curves in Figs. 3B to 3F could be examples of such multiple cross-sections at a particular point.

[0635] *Principal curvatures and directions:* The directions of the normal planes where the curvature of the curve takes its maximum and minimum values are called the principal directions. In the examples of Fig. 3B to Fig. 3F, the maximum curvature

occurs in Fig. 3B, and the minimum occurs in Fig. 3F, hence Fig. 3B and Fig. 3F are cross sections in the principal directions. The principal curvatures at *p* are the curvatures in the principal directions.

[0636] *Region of a surface:* A connected set of points on a surface. The set of points in a region may have similar characteristics, e.g. curvatures or signs.

[0637] *Saddle region:* A region where at each point, the principal curvatures have opposite signs, that is, one is positive, and the other is negative (depending on the direction to which the imaginary person turns, they may walk uphill or downhill).

[0638] *Dome region:* A region where at each point the principal curvatures have the same sign, e.g. both positive (a "concave dome") or both negative (a "convex dome").

[0639] *Cylindrical region:* A region where one principal curvature is zero (or, for example, zero within manufacturing tolerances) and the other principal curvature is non-zero.

[0640] *Planar region:* A region of a surface where both of the principal curvatures are zero (or, for example, zero within manufacturing tolerances).

[0641] *Edge of a surface:* A boundary or limit of a surface or region.

[0642] *Path:* In certain forms of the present technology, 'path' will be taken to mean a path in the mathematical – topological sense, e.g. a continuous space curve from f(0) to f(1) on a surface. In certain forms of the present technology, a 'path' may be described as a route or course, including e.g. a set of points on a surface. (The path for the imaginary person is where they walk on the surface, and is analogous to a garden path).

[0643] *Path length:* In certain forms of the present technology, 'path length' will be taken to mean the distance along the surface from $f(0)$ to $f(1)$, that is, the distance along the path on the surface. There may be more than one path between two points on a surface and such paths may have different path lengths. (The path length for the imaginary person would be the distance they have to walk on the surface along the path).

[0644] *Straight-line distance:* The straight-line distance is the distance between two points on a surface, but without regard to the surface. On planar regions, there would be a path on the surface having the same path length as the straight-line distance between two points on the surface. On non-planar surfaces, there may be no paths having the same path length as the straight-line distance between two points. (For the imaginary person, the straight-line distance would correspond to the distance 'as the crow flies'.)

5.8.6.3 Space curves

[0645] *Space curves*: Unlike a plane curve, a space curve does not necessarily lie in any particular plane. A space curve may be closed, that is, having no endpoints. A space curve may be considered to be a one-dimensional piece of three-dimensional space. An imaginary person walking on a strand of the DNA helix walks along a space curve. A typical human left ear comprises a helix, which is a left-hand helix, see Fig. 3Q. A typical human right ear comprises a helix, which is a right-hand helix, see Fig. 3R. Fig. 3S shows a right-hand helix. The edge of a structure, e.g. the edge of a membrane or impeller, may follow a space curve. In general, a space curve may be described by a curvature and a torsion at each point on the space curve. Torsion is a measure of how the curve turns out of a plane. Torsion has a sign and a magnitude. The torsion at a point on a space curve may be characterised with reference to the tangent, normal and binormal vectors at that point.

[0646] *Tangent unit vector (or unit tangent vector):* For each point on a curve, a vector at the point specifies a direction from that point, as well as a magnitude. A tangent unit vector is a unit vector pointing in the same direction as the curve at that point. If an imaginary person were flying along the curve and fell off her vehicle at a particular point, the direction of the tangent vector is the direction she would be travelling.

[0647] *Unit normal vector:* As the imaginary person moves along the curve, this tangent vector itself changes. The unit vector pointing in the same direction that the tangent vector is changing is called the unit principal normal vector. It is perpendicular to the tangent vector.

[0648] *Binormal unit vector:* The binormal unit vector is perpendicular to both the tangent vector and the principal normal vector. Its direction may be determined by a right-hand rule (see e.g. Fig. 3P), or alternatively by a left-hand rule (Fig. 3O).

[0649] *Osculating plane:* The plane containing the unit tangent vector and the unit principal normal vector. See Figures 3O and 3P.

[0650] *Torsion of a space curve:* The torsion at a point of a space curve is the magnitude of the rate of change of the binormal unit vector at that point. It measures how much the curve deviates from the osculating plane. A space curve which lies in a plane has zero torsion. A space curve which deviates a relatively small amount from the osculating plane will have a relatively small magnitude of torsion (e.g. a gently sloping helical path). A space curve which deviates a relatively large amount from the osculating plane will have a relatively large magnitude of torsion (e.g. a steeply sloping helical path). With reference to Fig. 3S, since T2>T1, the magnitude of the torsion near the top coils of the helix of Fig. 3S is greater than the magnitude of the torsion of the bottom coils of the helix of Fig. 3S

[0651] With reference to the right-hand rule of Fig. 3P, a space curve turning towards the direction of the right-hand binormal may be considered as having a right-hand positive torsion (e.g. a right-hand helix as shown in Fig. 3S). A space curve turning away from the direction of the right-hand binormal may be considered as having a right-hand negative torsion (e.g. a left-hand helix).

[0652] Equivalently, and with reference to a left-hand rule (see Fig. 3O), a space curve turning towards the direction of the left-hand binormal may be considered as having a left-hand positive torsion (e.g. a left-hand helix). Hence left-hand positive is equivalent to right-hand negative. See Fig. 3T.

5.8.6.4 Holes

[0653] A surface may have a one-dimensional hole, e.g. a hole bounded by a plane curve or by a space curve. Thin structures (e.g. a membrane) with a hole, may be described as having a one-dimensional hole. See for example the one dimensional hole in the surface of structure shown in Fig. 3I, bounded by a plane curve.

[0654] A structure may have a two-dimensional hole, e.g. a hole bounded by a surface. For example, an inflatable tyre has a two dimensional hole bounded by the interior surface of the tyre. In another example, a bladder with a cavity for air or gel could have a two-dimensional hole. See for example the cushion of Fig. 3L and the example cross-sections therethrough in Fig. 3M and Fig. 3N, with the interior surface bounding a two dimensional hole indicated. In a yet another example, a conduit may comprise a one-dimension hole (e.g. at its entrance or at its exit), and a two-dimension hole bounded by the inside surface of the conduit. See also the two dimensional hole through the structure shown in Fig. 3K, bounded by a surface as shown.

5.9 OTHER REMARKS

[0655] Unless the context clearly dictates otherwise and where a range of values is provided, it is understood that each intervening value, to the tenth of the unit of the lower limit, between the upper and lower limit of that range, and any other stated or intervening value in that stated range is encompassed within the technology. The upper and lower limits of these intervening ranges, which may be independently included in the intervening ranges, are also encompassed within the technology, subject to any specifically excluded limit in the stated range. Where the stated range includes one or both of the limits, ranges excluding either or both of those included limits are also included in the technology.

[0656] Furthermore, where a value or values are stated herein as being implemented as part of the technology, it is understood that such values may be approximated, unless otherwise stated, and such values may be utilized to any suitable significant digit to the extent that a practical technical implementation may permit or require it.

[0657] Unless defined otherwise, all technical and scientific terms used herein have the same meaning as commonly understood by one of ordinary skill in the art to which this technology belongs. Although any methods and materials similar or equivalent to those described herein can also be used in the practice or testing of the present technology, a limited number of the exemplary methods and materials are described herein.

[0658] When a particular material is identified as being used to construct a component, obvious alternative materials with similar properties may be used as a substitute. Furthermore, unless specified to the contrary, any and all components herein described are understood to be capable of being manufactured and, as such, may be manufactured together or separately.

[0659] It must be noted that as used herein and in the appended claims, the singular forms "a", "an", and "the" include their plural equivalents, unless the context clearly dictates otherwise.

[0660] All publications mentioned herein are incorporated herein by reference in their entirety to disclose and describe the methods and/or materials which are the subject of those publications. The publications discussed herein are provided solely for their disclosure prior to the filing date of the present application. Nothing herein is to be construed as an admission that the present technology is not entitled to antedate such publication by virtue of prior invention. Further, the dates of publication provided may be different from the actual publication dates, which may need to be independently confirmed.

[0661] The terms "comprises" and "comprising" should be interpreted as referring to elements, components, or steps in a non-exclusive manner, indicating that the referenced elements, components, or steps may be present, or utilized, or combined with other elements, components, or steps that are not expressly referenced.

[0662] The subject headings used in the detailed description are included only for the ease of reference of the reader and should not be used to limit the subject matter found throughout the disclosure or the claims. The subject headings should not be used in construing the scope of the claims or the claim limitations.

[0663] Although the technology herein has been described with reference to particular examples, it is to be understood that these examples are merely illustrative of the principles and applications of the technology. In some instances, the terminology and symbols may imply specific details that are not required to practice the technology. For example, although the terms "first" and "second" may be used, unless otherwise specified, they are not intended to indicate any order but may be utilised to distinguish between distinct elements. Furthermore, although process steps

in the methodologies may be described or illustrated in an order, such an ordering is not required. Those skilled in the art will recognize that such ordering may be modified and/or aspects thereof may be conducted concurrently or even synchronously.

[0664] It is therefore to be understood that numerous modifications may be made to the illustrative examples and that other arrangements may be devised without departing from the spirit and scope of the technology.

5.10 REFERENCE SIGNS LIST

patient	1000
bed partner	1100
patient interface	3000
patient interface chamber	3001
sub-assembly	3002
seal - forming structure	3100
nasal portion	3101
oral portion	3102
nasal portion hole	3103
oral portion hole	3104
nasal portion hole divider	3105
plenum chamber	3200
plenum chamber hole	3201
connection rim	3202
slot	3203
detent	3204
chord	3210
superior point	3220
inferior point	3230
positioning and stabilising structure	3300
clip	3301
superior tie	3302
inferior tie	3303

posterior portion	3304
clip magnet	3305
crossbar	3306
overhang	3307
vent	3400
plenum chamber vent hole	3401
connection port	3600
forehead support	3700
conduit connector	3800
conduit connector housing	3801
conduit connector end	3802
conduit connector inlet hole	3803
conduit connector outlet hole	3804
baffle	3805
conduit connector spacer	3806
conduit connector attachment structure	3807
conduit connector outlet	3808
conduit connector vent outlet	3830
conduit connector vent hole	3831
conduit connector vent inlet	3832
conduit connector vent spacer	3833
anti-asphyxia valve assembly	3850
anti-asphyxia valve flap	3851
anti-asphyxia valve hole	3852
anti-asphyxia valve flap connector hole	3853
anti-asphyxia valve flap connector	3854
anti-asphyxia valve hole divider	3855
anti-asphyxia valve flap hinge	3856
intermediate conduit connector inlet seal	3860
conduit connector outlet seal	3861
diffuser cover	3870
diffuser cavity	3871

inferior tie tab	3880
clip receiver	3881
notch	3882
flexible portion	3883
tab connector	3884
flange	3885
recess	3886
flange opening	3887
first tab	3890
second tab	3891
catch	3892
gap	3893
conduit	3900
sleeve	3901
tie connector	3902
connection port housing	3903
concertina section	3904
RPT device	4000
external housing	4010
upper portion	4012
lower portion	4014
panel	4015
chassis	4016
handle	4018
pneumatic block	4020
air filter	4110
inlet air filter	4112
outlet air filter	4114
muffler	4120
inlet muffler	4122
outlet muffler	4124
pressure generator	4140

blower	4142
motor	4144
anti - spill back valve	4160
air circuit	4170
supplemental oxygen	4180
electrical components	4200
printed circuit board assembly (PBCA)	4202
power supply	4210
input device	4220
central controller	4230
clock	4232
therapy device controller	4240
protection circuits	4250
memory	4260
transducer	4270
pressure sensor	4272
flow rate sensor	4274
motor speed transducer	4276
data communication interface	4280
remote external communication network	4282
local external communication network	4284
remote external device	4286
local external device	4288
output device	4290
display driver	4292
display	4294
humidifier	5000
humidifier inlet	5002
humidifier outlet	5004
humidifier base	5006
humidifier reservoir	5110
reservoir	5110

conductive portion	5120
humidifier reservoir dock	5130
locking lever	5135
water level indicator	5150
humidifier transducer	5210
air pressure sensor	5212
air flow rate transducer	5214
temperature sensor	5216
humidity sensor	5218
heating element	5240
humidifier controller	5250
central humidifier controller	5251
heating element controller	5252
air circuit controller	5254
elbow assembly	7700
elbow member	7710
vent hole	7720
clip member	7730
pinch arm	7740
catch portion	7750
connecting portion	7760
button or trigger portion	7780
finger-grip portion	7781
swivel connector	7790
ring member	7900

6 CLAIMS

1. A patient interface comprising:

a plenum chamber at least partly forming a patient interface chamber that is pressurisable to a therapeutic pressure of at least 6 cmH_2O above ambient air pressure, the plenum chamber including a first plenum chamber hole and a second plenum chamber hole, the first plenum chamber hole and the second plenum chamber hole each being sized and structured to receive a flow of air at the therapeutic pressure for breathing by a patient,

a seal-forming structure constructed and arranged to form a seal with a region of the patient's face surrounding an entrance to the patient's airways, said seal-forming structure having at least one hole therein such that the flow of air at the therapeutic pressure is delivered to at least an entrance to the patient's nares, the seal-forming structure constructed and arranged to maintain the therapeutic pressure in the patient interface chamber throughout the patient's respiratory cycle in use;

a first conduit and a second conduit each being sized and structured to receive the flow of air at the therapeutic pressure for breathing by the patient;

a first conduit connector configured to pneumatically connect the first conduit to the first plenum chamber hole to provide the flow of air at the therapeutic pressure to the patient interface chamber for breathing by the patient and a second conduit connector configured to pneumatically connect the second conduit to the second plenum chamber hole to provide the flow of air at the therapeutic pressure to the patient interface chamber for breathing by the patient; and

a positioning and stabilising structure to provide a force to hold the seal-forming structure in a therapeutically effective position on the patient's head, the positioning and stabilising structure comprising at least one tie,

wherein the first conduit connector and the second conduit connector each includes an anti-asphyxia valve that is configured to allow the patient to breath from ambient through their mouth in the absence of a flow of pressurised air through the first plenum chamber hole and the second plenum chamber hole.

2. The patient interface of claim 1, wherein the anti-asphyxia valve in each of the first conduit connector and the second conduit connector includes an anti-asphyxia valve hole.

3. The patient interface of claim 2, wherein each anti-asphyxia valve hole is shaped and dimensioned to allow the patient to breathe therethrough if the other anti-asphyxia valve hole is occluded.

4. The patient interface of any one of claims 2 to 3, wherein the anti-asphyxia valve in each of the first conduit connector and the second conduit connector further comprises an anti-asphyxia valve flap.

5. The patient interface of claim 4, wherein the anti-asphyxia valve flap of each of the first conduit connector and the second conduit connector is configured to occlude the anti-asphyxia valve hole of a corresponding one of the first conduit connector and the second conduit connector in a closed position such that the flow of air at the therapeutic pressure traveling through a corresponding one of the first conduit connector and the second conduit connector is directed to the patient interface chamber and prevented from escaping to atmosphere via the anti-asphyxia valve hole during the patient's entire respiratory cycle.

6. The patient interface of any one of claims 4 to 5, wherein, in an open position, the anti-asphyxia valve flap of each of the first conduit connector and the second conduit connector is configured to allow the patient to breath from ambient through their mouth via the anti-asphyxia valve hole of a corresponding one of the first conduit connector and the second conduit connector in the absence of a flow of pressurised air through the first plenum chamber hole and the second plenum chamber hole.

7. The patient interface of any one of claims 4 to 6, wherein the anti-asphyxia valve hole of each of the first conduit connector and the second conduit connector is divided by an anti-asphyxia valve hole divider that prevents the corresponding anti-asphyxia valve flap from passing through the anti-asphyxia valve hole.

8. The patient interface of any one of claims 4 to 7, wherein each anti-asphyxia valve flap further comprises at least one vent hole to allow a portion of the flow of air at the therapeutic pressure to escape to atmosphere therethrough.

9. The patient interface of any one of claims 4 to 8, wherein the anti-asphyxia valve of each of the first conduit connector and the second conduit connector further comprises an anti-asphyxia valve flap connector hole, and

wherein the anti-asphyxia valve flap of each of the first conduit connector and the second conduit connector further comprises an anti-asphyxia valve flap connector to connect the anti-asphyxia valve flap to the anti-asphyxia valve flap connector hole the anti-asphyxia valve of a corresponding one of the first conduit connector and the second conduit connector.

10. The patient interface of any one of claims 1 to 9, wherein the anti-asphyxia valve of each of the first conduit connector and the second conduit connector is configured to operate independently of the other.

11. The patient interface of any one of claims 1 to 10, wherein each of the first conduit connector and the second conduit connector further comprises at least one conduit connector vent hole that is configured to allow a continuous flow of gases exhaled by the patient from an interior of the patient interface chamber to ambient, the at least one conduit connector vent hole being sized and shaped to maintain the therapeutic pressure in the patient interface chamber in use.

12. The patient interface of claim 11, wherein each of the first conduit connector and the second conduit connector further comprises a conduit connector vent inlet that is configured to direct the continuous flow of gases exhaled by the patient from the interior of the patient interface chamber to the at least one conduit connector vent hole.

13. The patient interface of any one of claims 11 to 12, wherein each of the first conduit connector and the second conduit connector further comprises a conduit connector vent outlet that is configured to direct the continuous flow of gases exhaled by the patient from the at least one conduit connector vent hole to atmosphere.

14. The patient interface of any one of claims 11 to 13, wherein each of the first conduit connector and the second conduit connector further comprises a baffle to prevent the flow of air at the therapeutic pressure passing through each of the first conduit connector and the second conduit connector from passing directly to atmosphere via the at least one conduit connector vent hole.

15. The patient interface of any one of claims 11 to 14, wherein each of the first conduit connector and the second conduit connector further comprises a diffuser cavity containing a diffuser material.

16. The patient interface of claim 15, wherein the diffuser cavity and the diffuser material is positioned downstream of the at least one conduit connector vent hole relative to the continuous flow of gases to diffuse the continuous flow of gases before escaping to atmosphere.

17. The patient interface of any one of claims 15 to 16, wherein each of the first conduit connector and the second conduit connector further comprises a diffuser cover that encloses the diffuser material within the diffuser cavity.

18. The patient interface of claim 17, wherein the diffuser cover is removable to allow removal and replacement of the diffuser material.

19. The patient interface of any one of claims 15 to 18, wherein each of the first conduit connector and the second conduit connector further comprises a conduit connector vent outlet that is positioned such that at least a portion of the continuous flow of gases passes through the diffuser material before escaping to atmosphere via the conduit connector vent outlet.

20. The patient interface of any one of claims 11 to 19, wherein each of the first conduit connector and the second conduit connector further comprises a conduit connector spacer to maintain a gap between a portion of each of the first conduit connector and the second conduit connector and the plenum chamber to allow the continuous flow of gases to escape from each of the first conduit connector and the second conduit connector to atmosphere.

21. The patient interface of any one of claims 1 to 10, wherein the plenum chamber comprises at least one plenum chamber vent hole.

22. The patient interface of claim 21, wherein the plenum chamber comprises a plurality of plenum chamber vent holes.

23. The patient interface of any one of claims 1 to 22, wherein each of the first conduit connector and the second conduit connector further comprises a conduit connection end that is configured to be connected to a corresponding one of the first conduit and the second conduit.

24. The patient interface of any one of claims 1 to 23, wherein each of the first conduit connector and the second conduit connector further comprises a conduit connector end that defines a conduit connector inlet hole that is configured to receive the flow of air at the therapeutic pressure from a corresponding one of the first conduit and the second conduit.

25. The patient interface of claim 24, wherein each of the first conduit connector and the second conduit connector further comprises a conduit connector outlet that defines a conduit connector outlet hole that is configured to direct the flow of air at the therapeutic pressure into the patient interface chamber.

26. The patient interface of claim 25, wherein each conduit connector end is oriented substantially orthogonally to a corresponding conduit connector outlet.

27. The patient interface of any one of claims 1 to 26, wherein the plenum chamber further comprises a connection rim at a corresponding one of the first plenum chamber hole and the second plenum chamber hole, and

wherein each of the first conduit connector and the second conduit connector further comprises at least one conduit connector attachment structure that is configured to connect to the connection rim at a corresponding one of the first plenum chamber hole and the second plenum chamber hole.

28. The patient interface of any one of claims 1 to 27, wherein each of the first conduit connector and the second conduit connector is removable from the plenum chamber.

29. The patient interface of any one of claims 1 to 28, wherein each of the first conduit connector and the second conduit connector is permanently connected to the plenum chamber.

30. The patient interface of any one of claims 1 to 29, wherein each of the first conduit connector and the second conduit connector is configured to remain stationary when connected to the plenum chamber.

31. The patient interface of any one of claims 1 to 30, further comprising a seal between each of the first conduit connector and the second conduit connector and a corresponding one of the first plenum chamber hole and the second plenum chamber hole.

32. The patient interface of claim 31, wherein the seal is formed on each of the first conduit connector and the second conduit connector, the seal being configured to engage the plenum chamber at a corresponding one of the first plenum chamber hole and the second plenum chamber hole.

33. The patient interface of claim 32, wherein the seal is permanently joined to a corresponding one of the first conduit connector and the second conduit connector.

34. The patient interface of any one of claims 31 to 33, wherein the seal is constructed of silicone.

35. The patient interface of any one of claims 1 to 34, wherein the positioning and stabilising structure further comprises a pair of superior ties, each of the superior ties being constructed and arranged so that at least a portion of the superior tie overlies a corresponding lateral region of the patient's head superior to an otobasion superior of the patient's head in use, and

wherein the positioning and stabilising structure further comprises a pair of inferior ties, each of the inferior ties being constructed and arranged so that at least a portion of the inferior tie overlies a corresponding lateral region of the patient's head inferior to an otobasion inferior of the patient's head in use.

36. The patient interface of claim 35, wherein each of the first conduit connector and the second conduit connector further comprises an inferior tie connector that is configured to be connected to a corresponding one of the inferior ties.

37. The patient interface of claim 36, further comprising a clip to releasably connect each of the inferior ties to a corresponding one of the inferior tie connectors.

38. The patient interface of claim 37, wherein the clip further comprises a magnet.

39. The patient interface of claim 35, further comprising a pair of inferior tie tabs each configured to be connected to a corresponding one of the inferior ties, and

wherein each of the first conduit connector and the second conduit connector further comprises a flange configured to be connected a corresponding one of the inferior tie tabs.

40. The patient interface of claim 39, wherein each of the flanges further comprises a flange opening and a recess,

wherein each of the inferior tie tabs further comprises a tab connector configured to join each of the inferior tie tabs to a corresponding one of the flanges by passing through the corresponding flange opening and engaging the corresponding recess.

41. The patient interface of any one of claims 39 or 40, further comprising a clip configured to be connected to each of the inferior ties,

wherein each of the inferior tie tabs further comprises a clip receiver configured to be removably connected to a corresponding one of the clips to connect the inferior ties.

42. The patient interface of claim 41, wherein each of the clips and each of the clip receivers comprises a magnet oriented and charged to facilitate a removable connection.

43. The patient interface of any one of claims 41 or 42, wherein each of the clip receivers comprises a notch and each of the clips comprise a protrusion, each

protrusion being configured to engage a corresponding notch to limit rotation of the clip relative to the corresponding clip receiver.

44. The patient interface of any one of claim 1 to 43, wherein each of the first conduit connector and the second conduit connector further comprises a first tab and a second tab to releasably connect the first conduit connector and the second conduit connector to the plenum chamber at the first plenum chamber hole and the second plenum chamber hole, respectively.

45. The patient interface of claim 44, wherein the first tab and the second tab are configured such that the first conduit connector and the second conduit connector are only connectable to the plenum chamber by engaging the first tab with the plenum chamber followed by engaging the second tab with the plenum chamber.

46. The patient interface of claim 45, wherein the first tab and the second tab are configured such that the first conduit connector and the second conduit connector are only disconnectable from the plenum chamber by disengaging the second tab from the plenum chamber followed by disengaging the first tab from the plenum chamber.

47. The patient interface of any one of claims 45 or 46, wherein the plenum chamber further comprises a slot proximal to each of the first plenum chamber hole and the second plenum chamber hole,

wherein the first tab of each of the first conduit connector and the second conduit connector is configured to engage the slot associated with a corresponding one of the first plenum chamber hole and the second plenum chamber hole, and

wherein each of the first conduit connector and the second conduit connector is rotatable about the corresponding slot when the first tab of each of the first conduit connector and the second conduit connector is engaged with the corresponding slot.

48. The patient interface of claim 47, wherein the plenum chamber further comprises a detent proximal to each of the first plenum chamber hole and the second plenum chamber hole, and

wherein the second tab of each of the first conduit connector and the second conduit connector further comprises a catch, the catch being configured to engage the

detent associated with a corresponding one of the first plenum chamber hole and the second plenum chamber hole with a snap-fit.

49. The patient interface of claim 48, wherein the second tab of each of the first conduit connector and the second conduit connector is flexible.

50. The patient interface of any one of claims 48 or 49, wherein each of the first conduit connector and the second conduit connector further comprises a gap on each side of the corresponding second tab such that the second tab is cantilevered from each of the first conduit connector and the second conduit connector.

51. The patient interface of any one of claims 1 to 50, wherein the seal-forming structure further comprises a nasal portion configured to seal around the patient's nares and an oral portion configured to seal around the patient's mouth.

52. The patient interface of any one of claims 1 to 51, wherein the seal-forming structure further comprises a nasal portion hole configured to provide pneumatic communication between the patient's nares and the patient interface chamber, and

wherein the seal-forming structure further comprises an oral portion hole configured to provide pneumatic communication between the patient's mouth and the patient interface chamber.

53. The patient interface of any one of claims 1 to 52, further comprising:

a connection port housing, each of the first conduit and the second conduit in pneumatic communication with the connection port housing, and

a connection port connected to the connection port housing, the connection port configured to be connected to an air circuit to receive the flow of air at the therapeutic pressure.

54. The patient interface of claim 53, wherein the connection port further comprises an elbow.

55. The patient interface of any one of claims 53 to 54, wherein the connection port further comprises at least one vent hole.

56. The patient interface of any one of claims 53 to 55, wherein the connection port is swivelably connected to the connection port housing.

57. The patient interface of any one of claim 53 to 56, wherein the connection port and the connection port housing are configured to be positioned superior to the patient's head in use.

58. A respiratory therapy system, comprising:

the patient interface of any one of claims 1 to 57;

a respiratory pressure therapy device configured to generate the flow of air at the therapeutic pressure; and

an air circuit configured to direct the flow of air at the therapeutic pressure from the respiratory pressure therapy device to the patient interface.

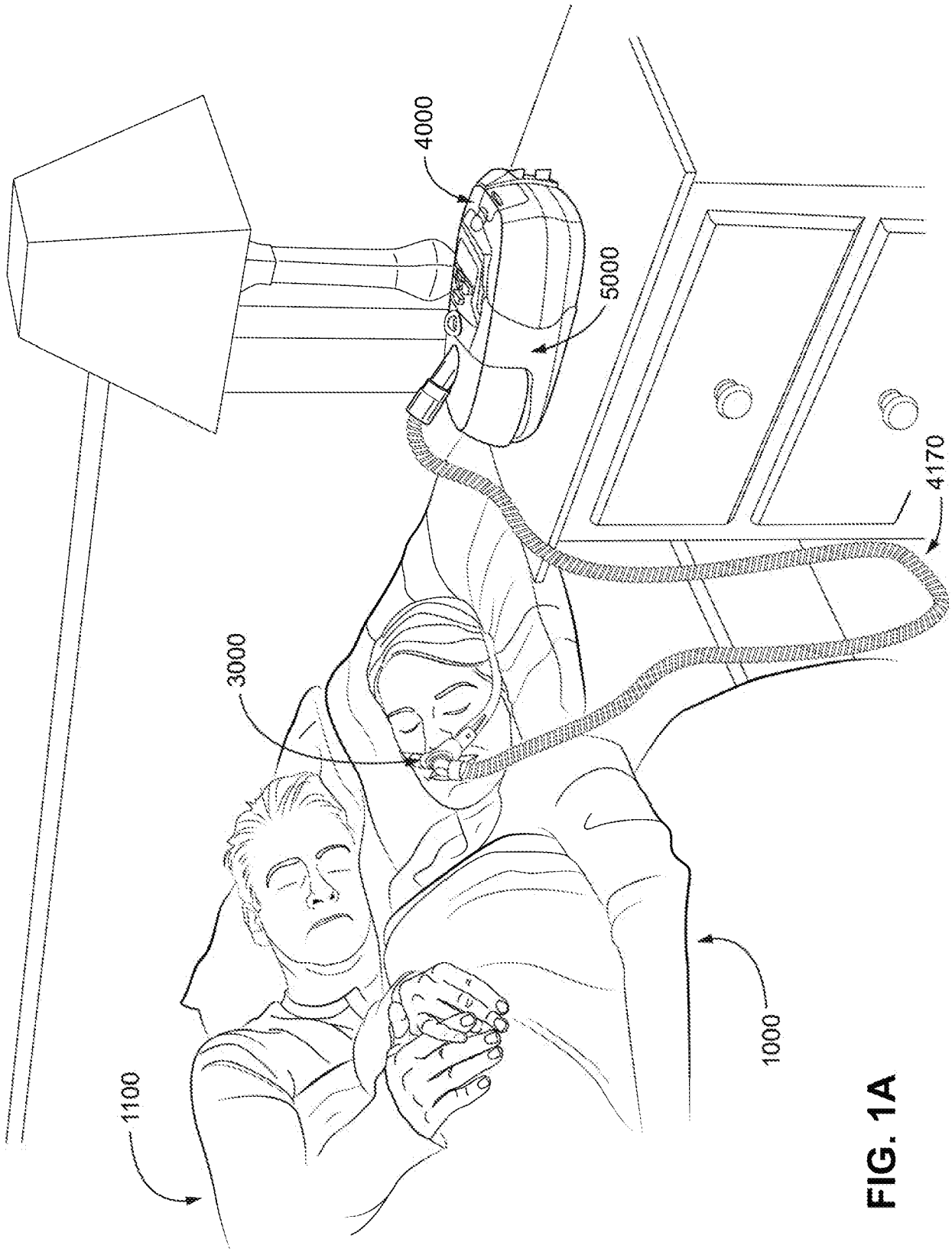

FIG. 1A

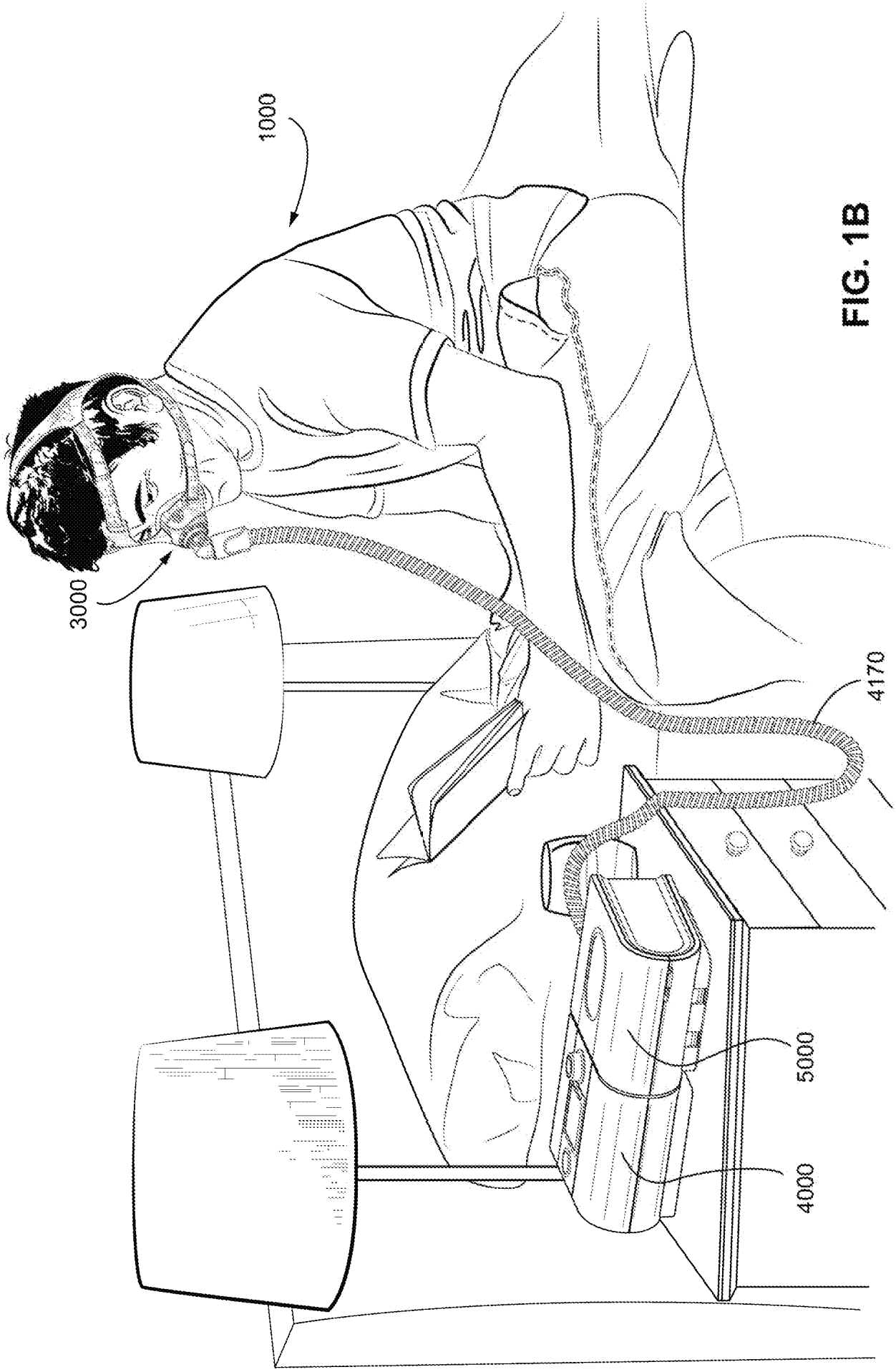

FIG. 1B



FIG. 1C

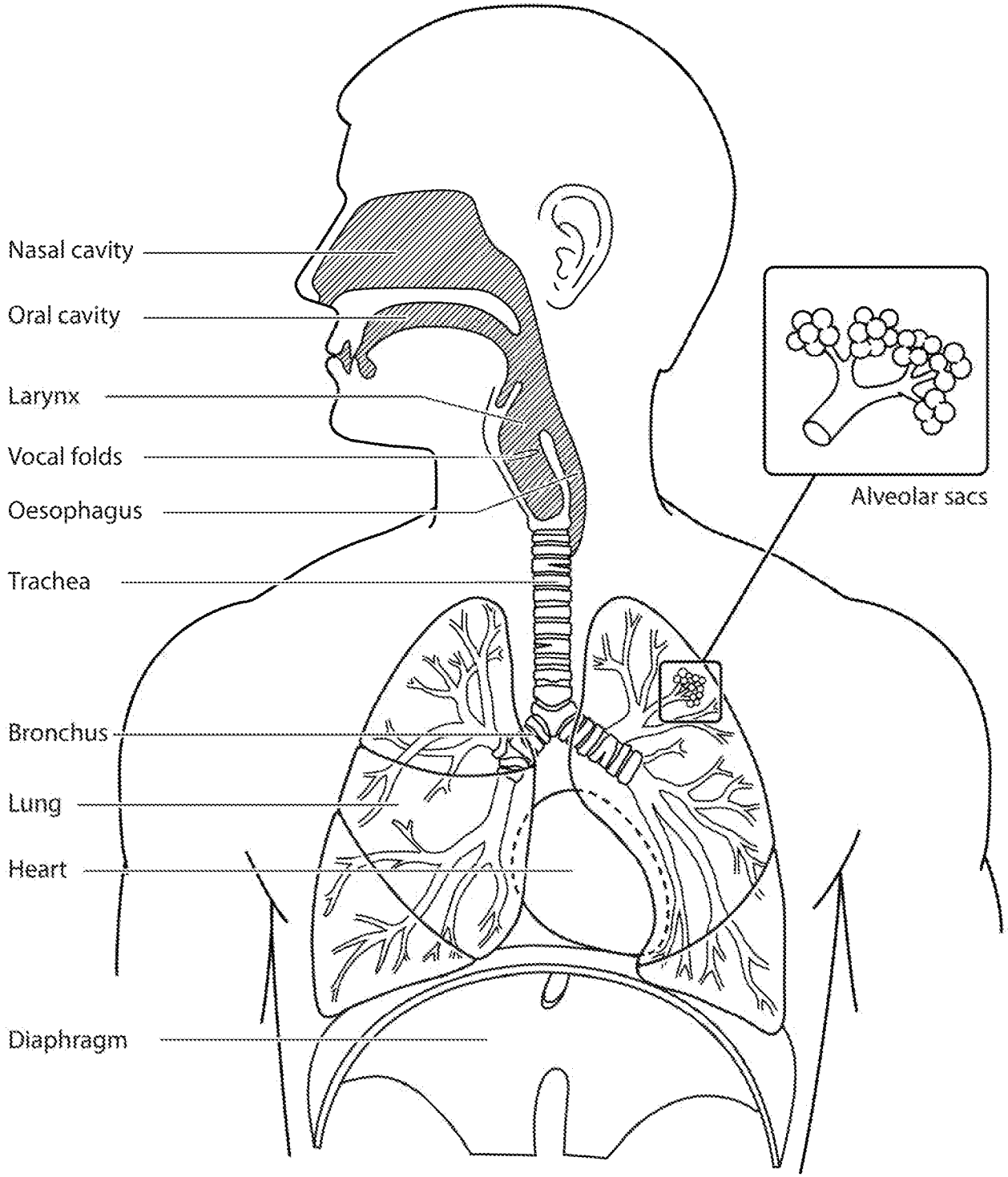

FIG. 2A

Copyright 2012 ResMed Limited

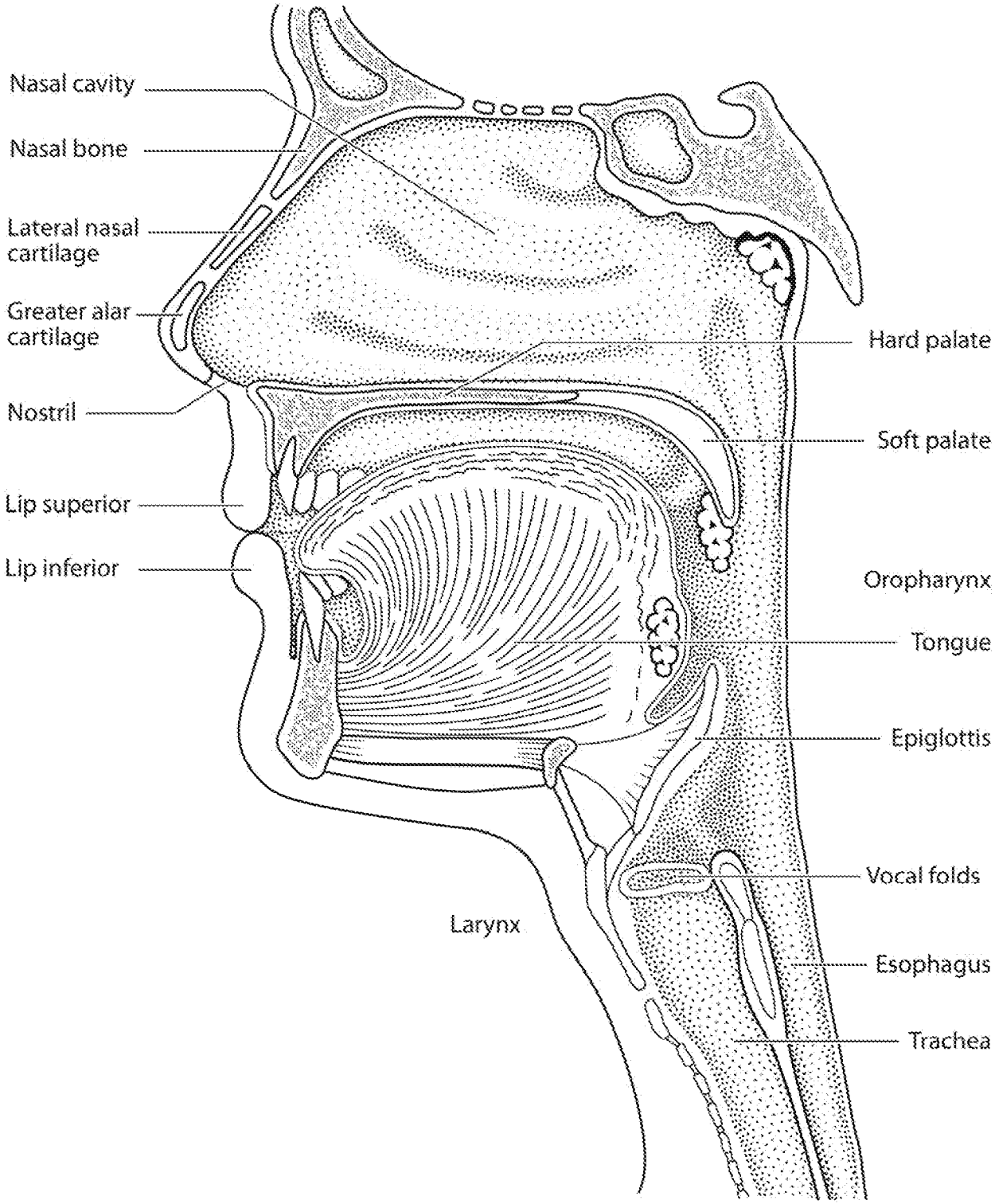

FIG. 2B

Copyright 2012 ResMed Limited

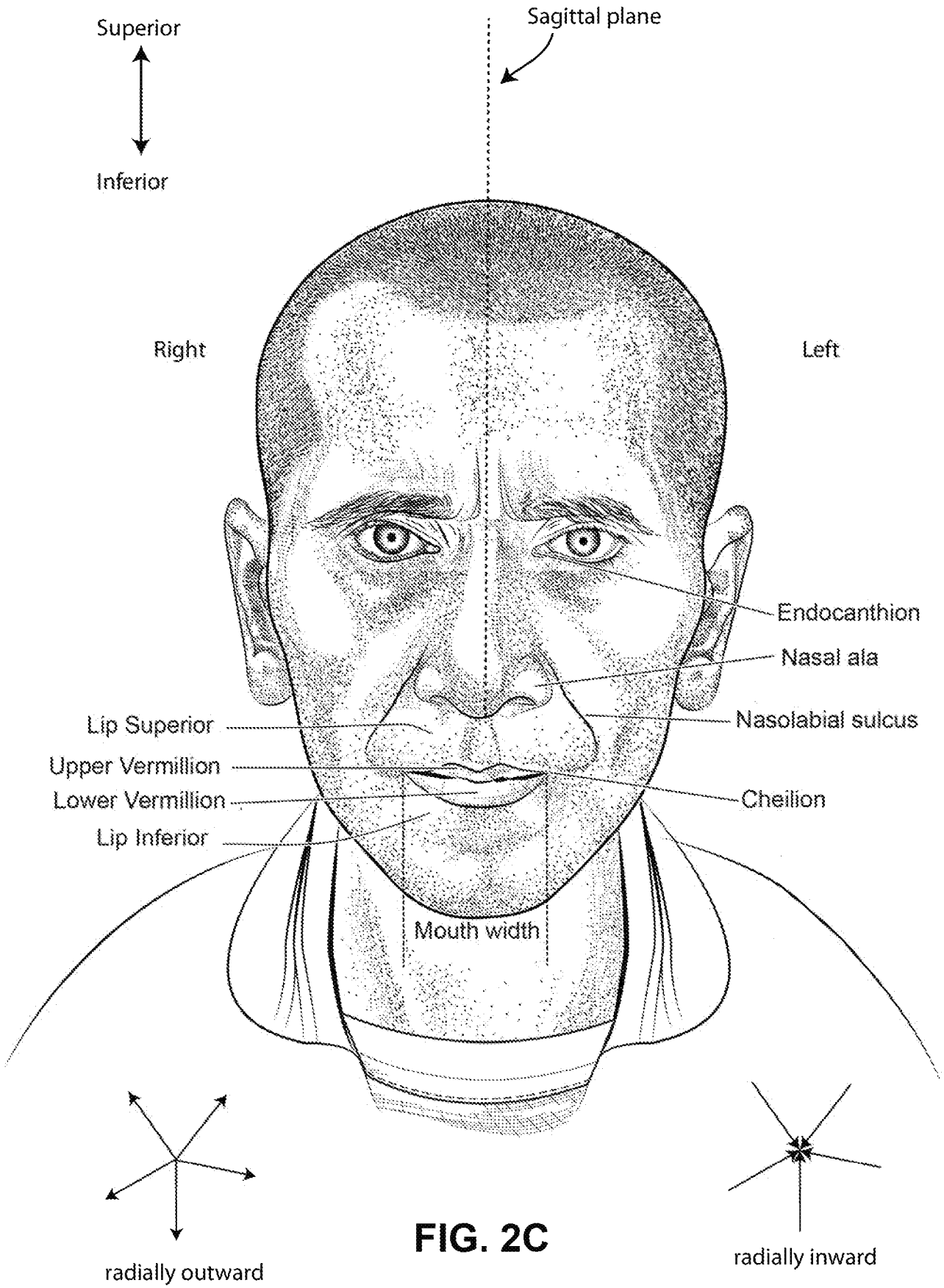

FIG. 2C

Copyright 2012 ResMed Limited

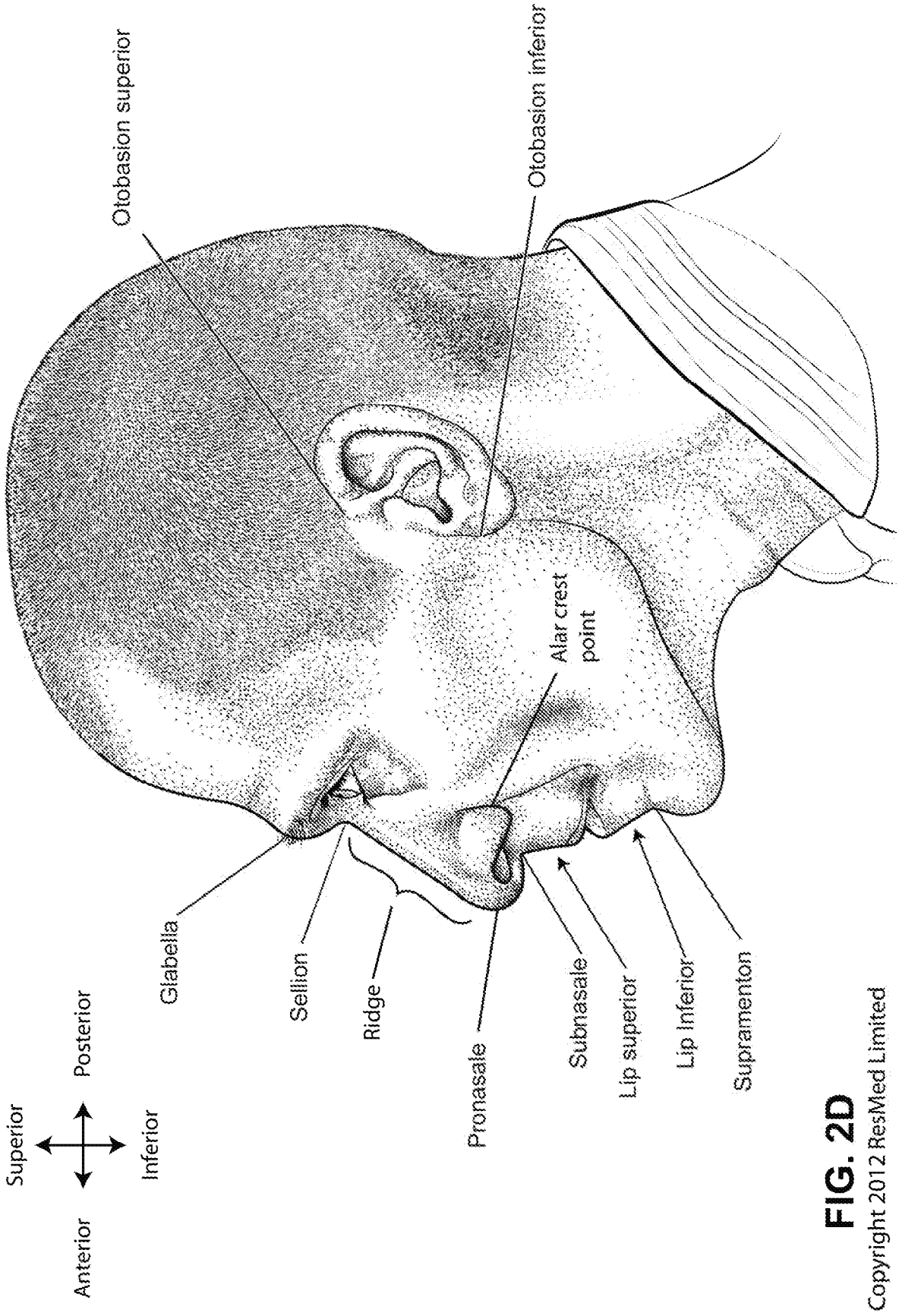

FIG. 2D

Copyright 2012 ResMed Limited

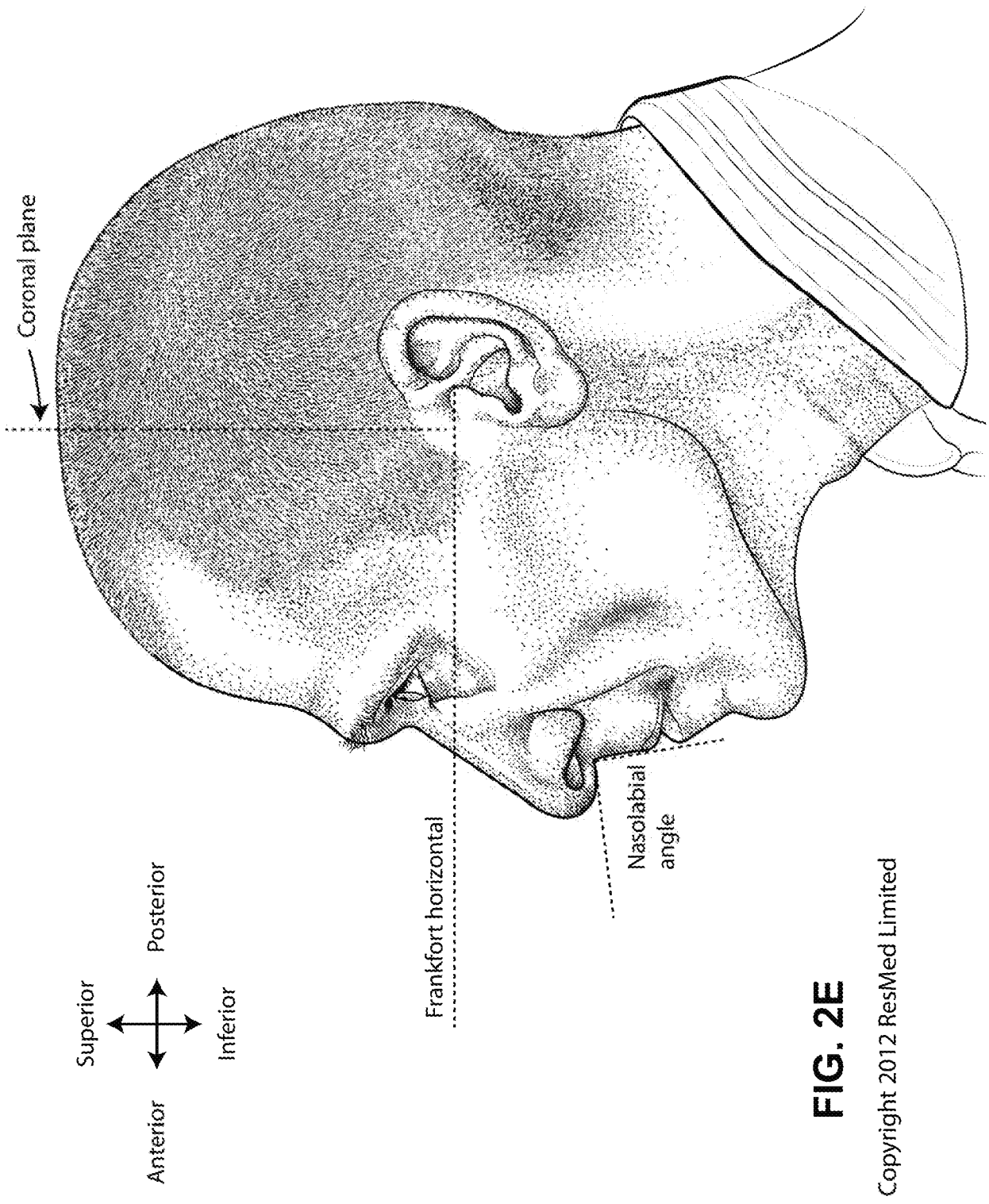

FIG. 2E

Copyright 2012 ResMed Limited

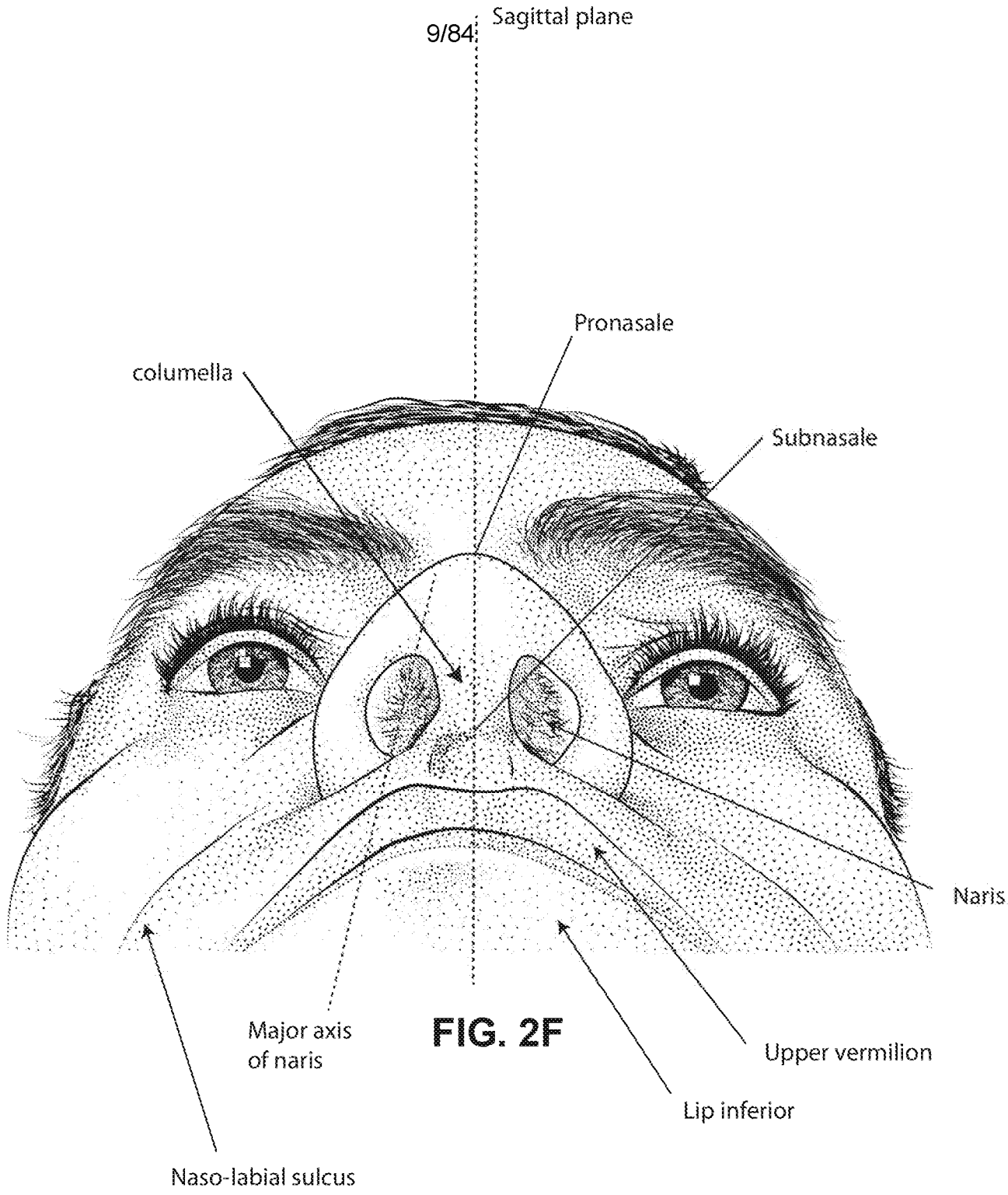

FIG. 2F

Copyright 2012 ResMed Limited

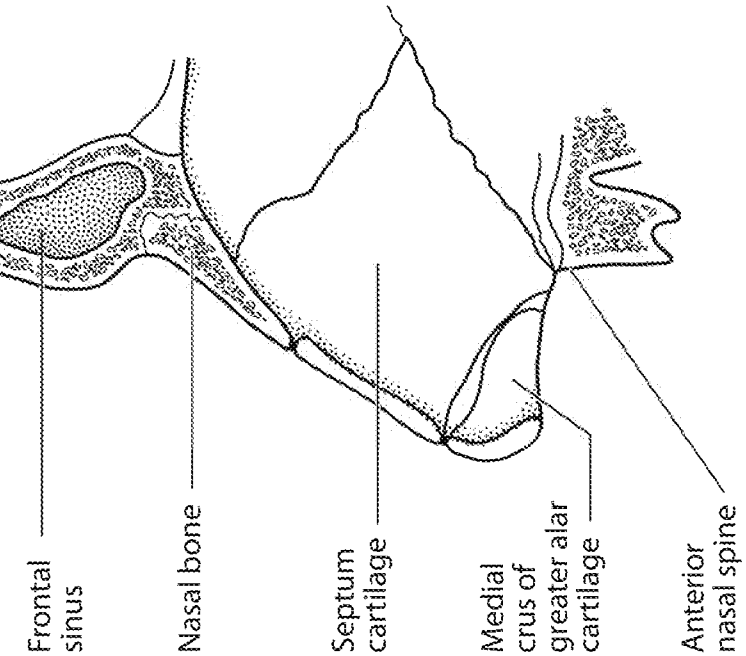

FIG. 2I

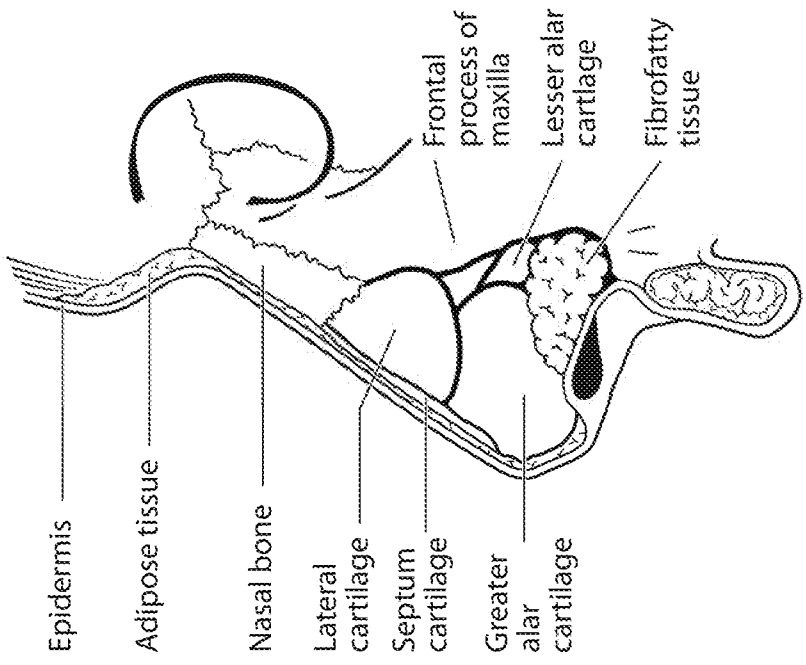

FIG. 2H



FIG. 2G

Copyright 2012 ResMed Limited

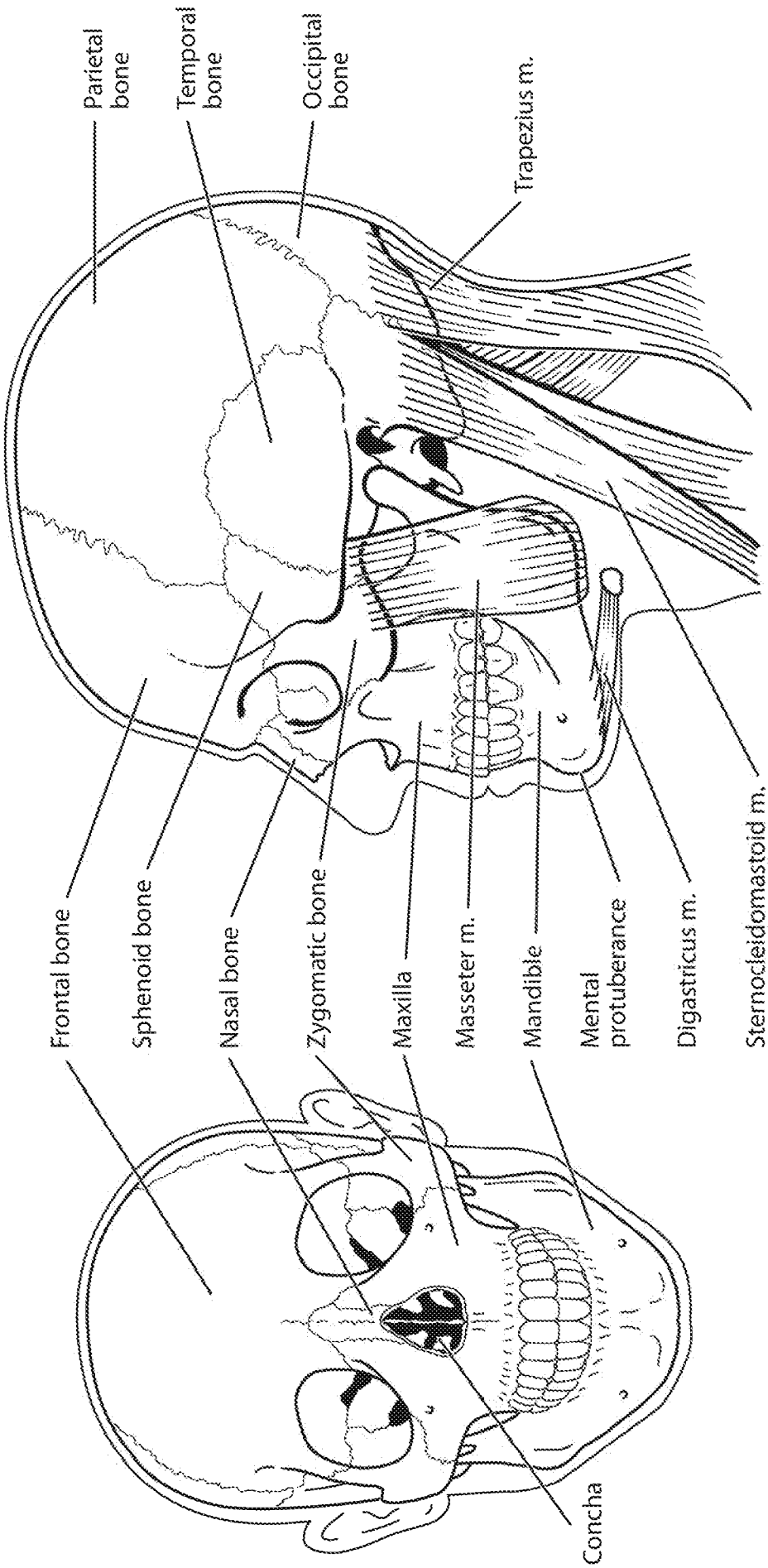

FIG. 2J

FIG. 2K

Copyright 2012 ResMed Limited

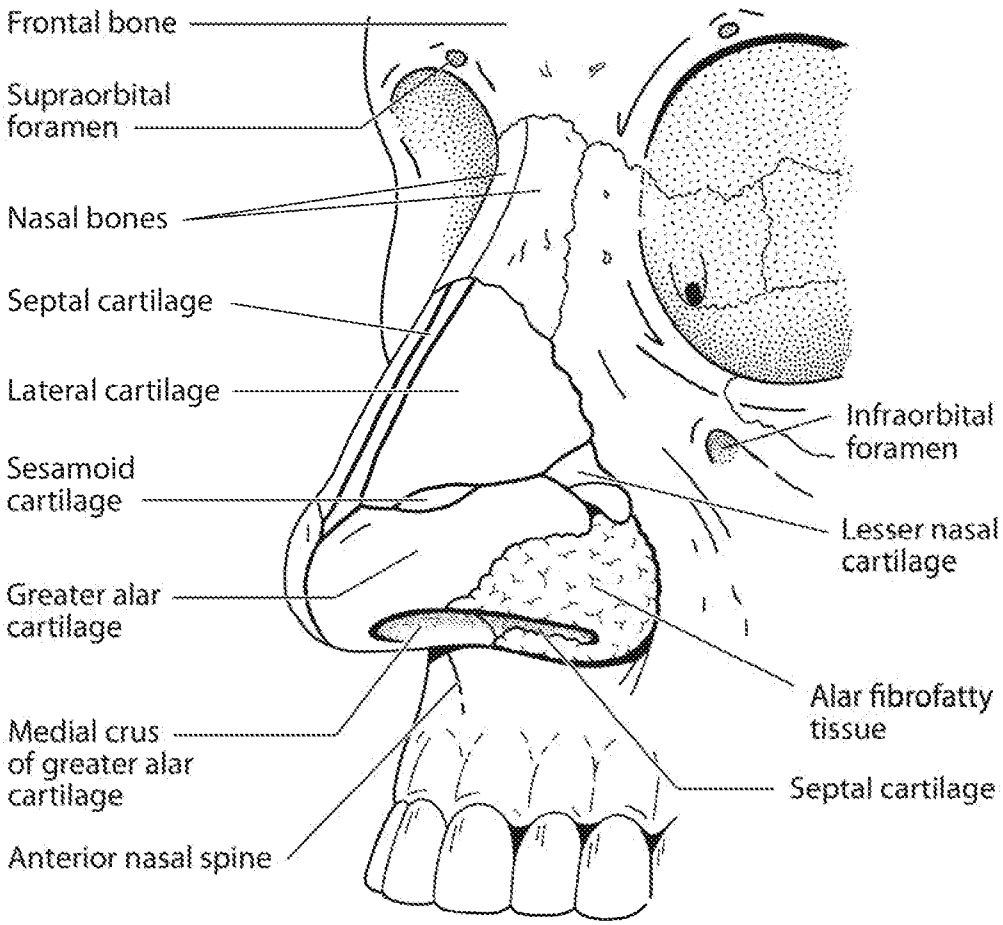

FIG. 2L

Copyright 2012 ResMed Limited

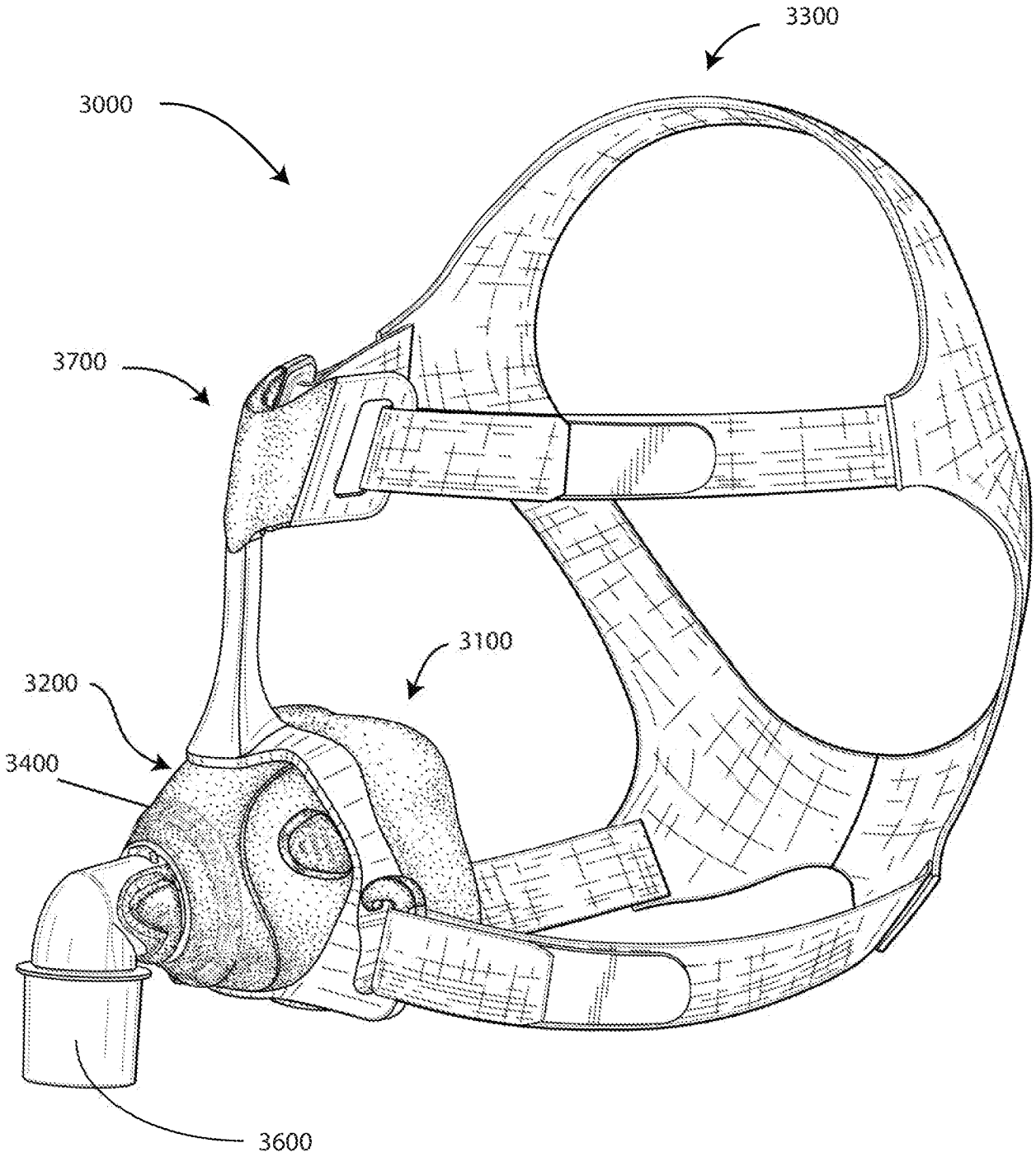

FIG. 3A

FIG. 3B

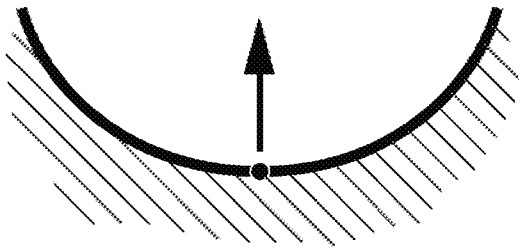

Relatively Large Positive Curvature

FIG. 3C

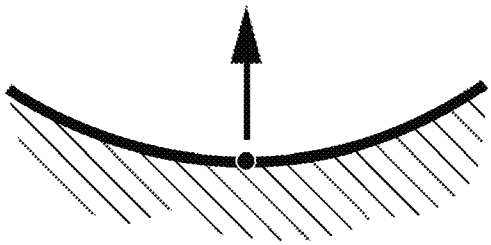

Relatively Small Positive Curvature

FIG. 3D

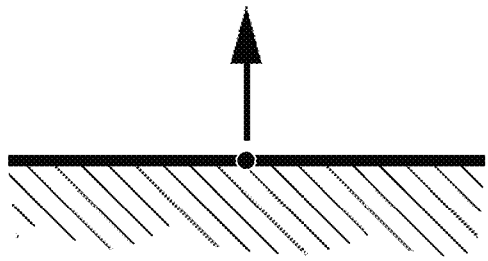

Zero Curvature

FIG. 3E

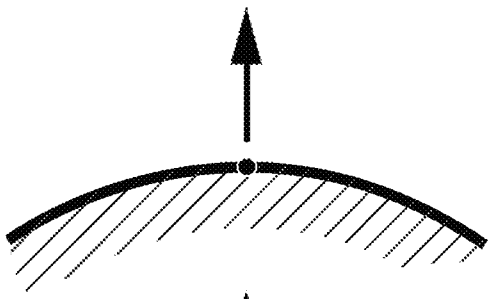

Relatively Small Negative Curvature

FIG. 3F

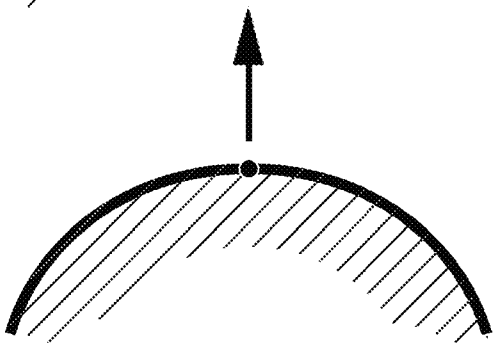

Relatively Large Negative Curvature

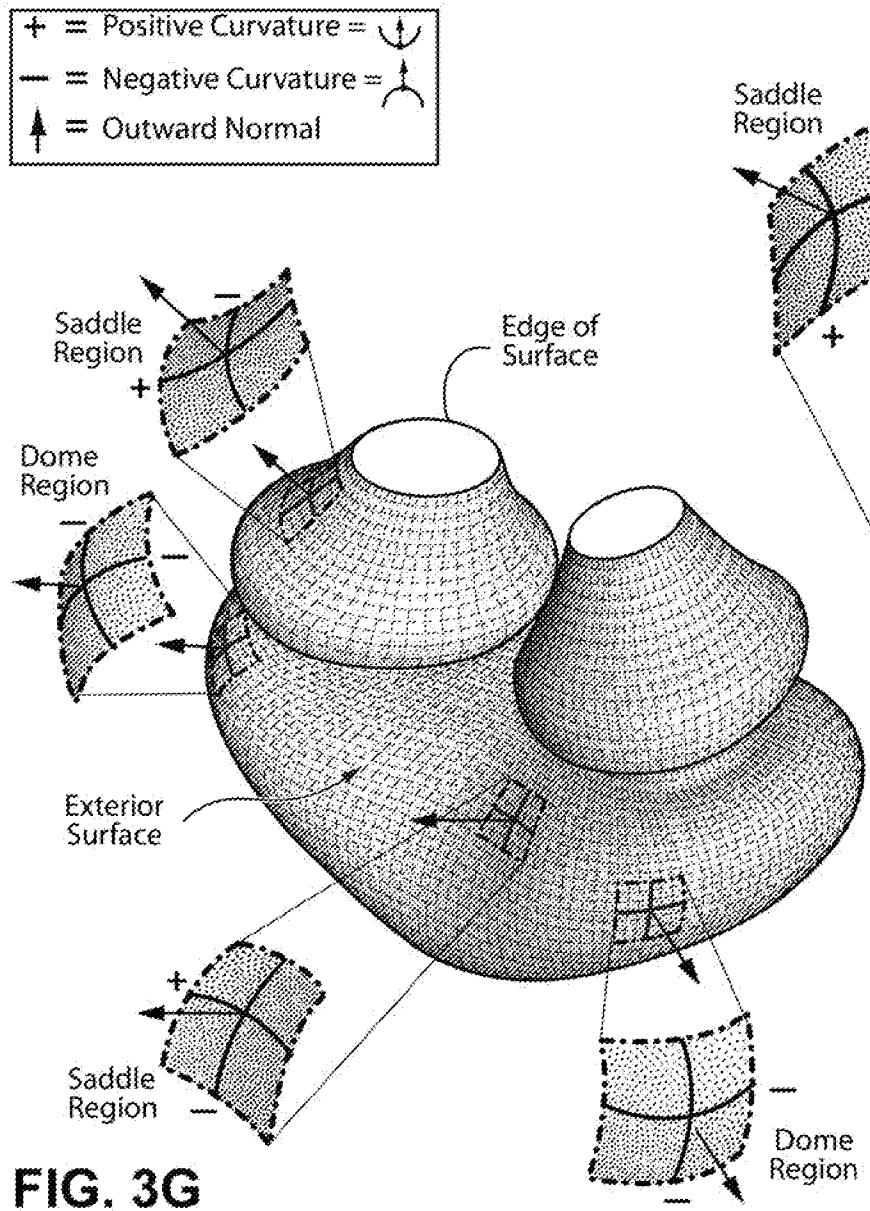

FIG. 3G

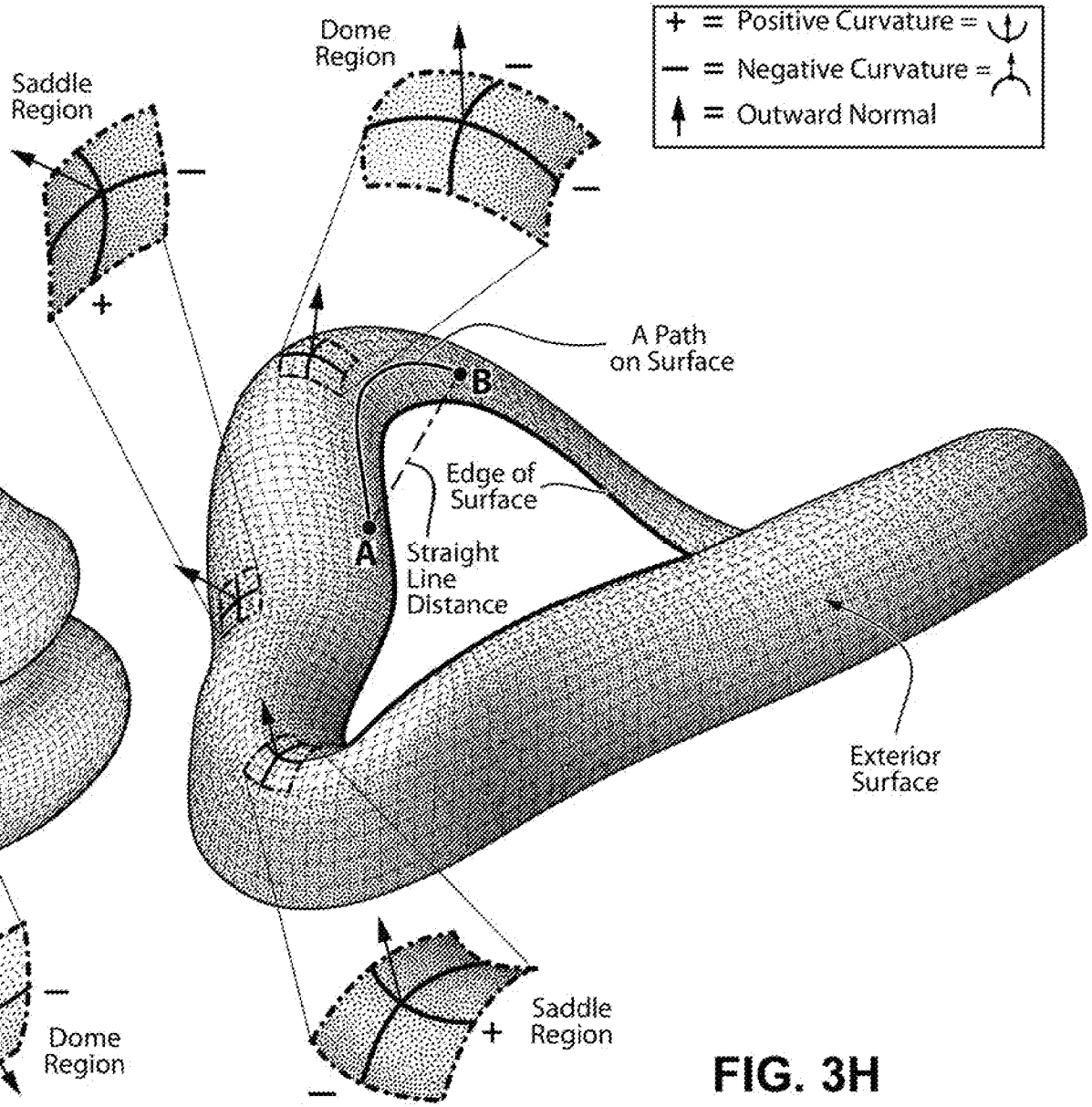

FIG. 3H

Copyright 2015 ResMed Limite

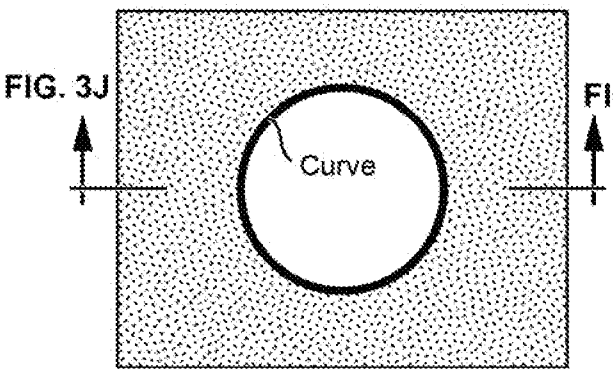

FIG. 3I

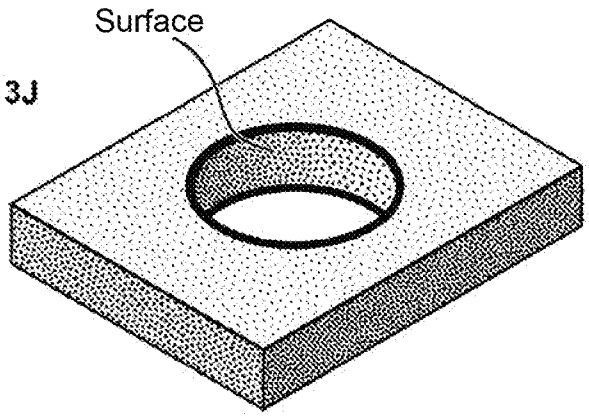

FIG. 3K

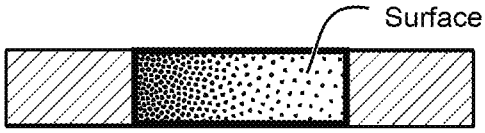

FIG. 3J

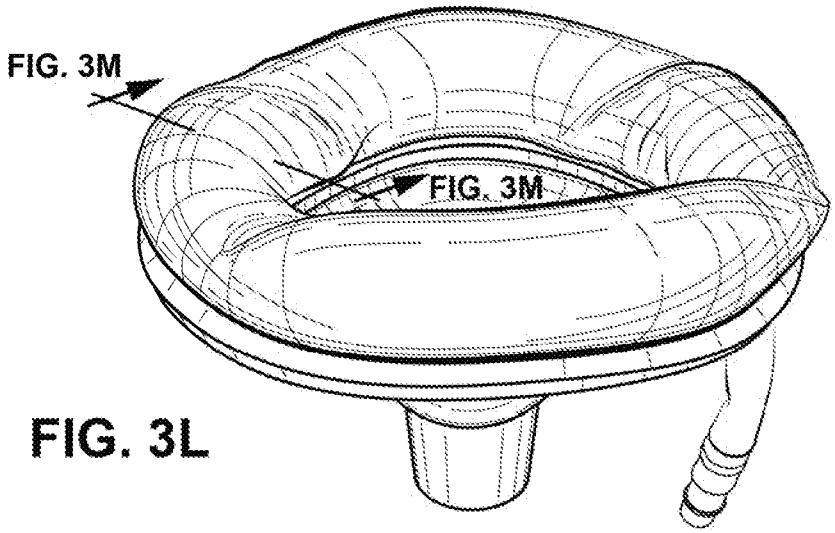

FIG. 3L

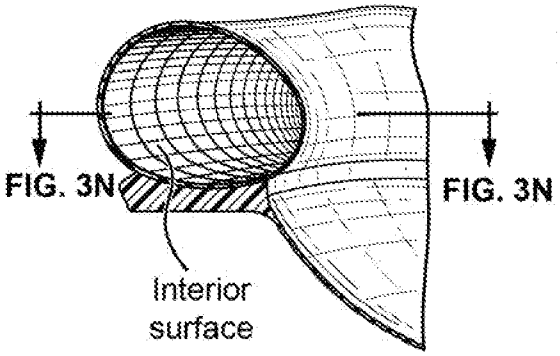

FIG. 3M

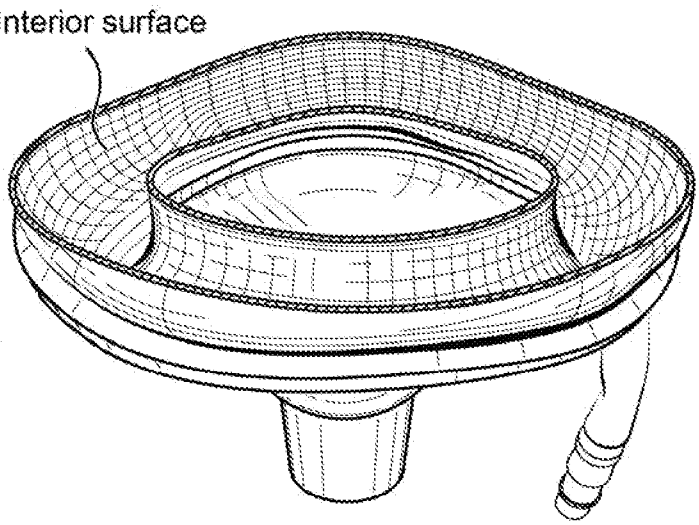

FIG. 3N

Copyright 2015 ResMed Limited

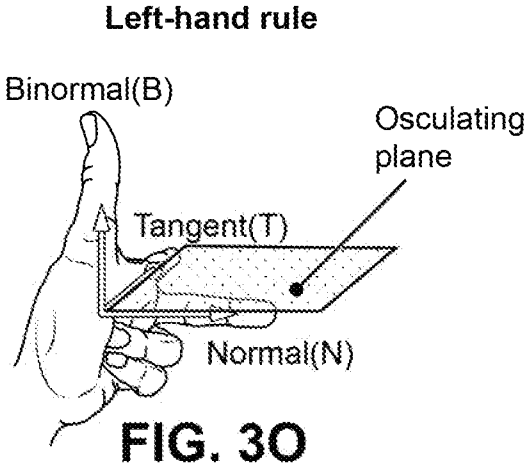

FIG. 3O

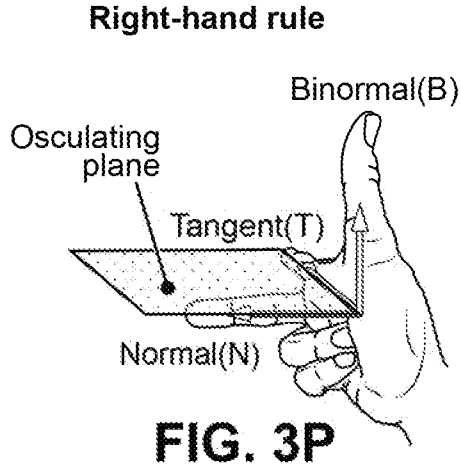

FIG. 3P

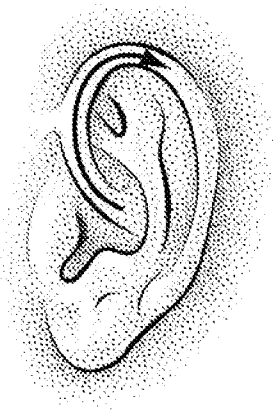

FIG. 3Q

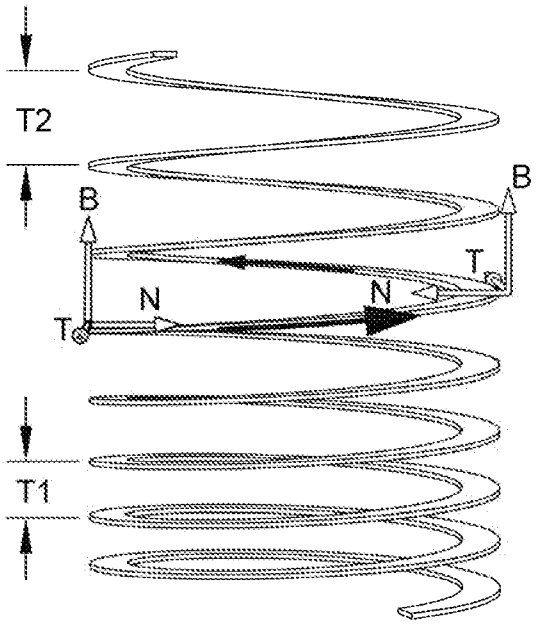

Right-hand helix
Right-hand positive

FIG. 3S

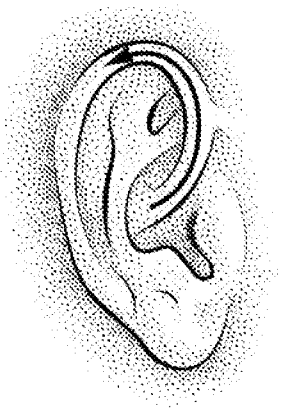

FIG. 3R

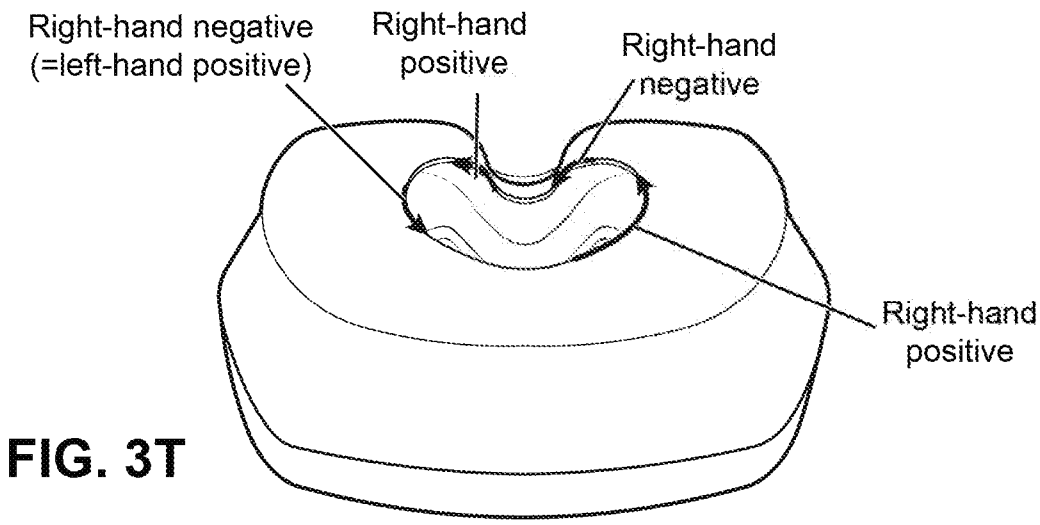

FIG. 3T

Copyright 2015 ResMed Limited

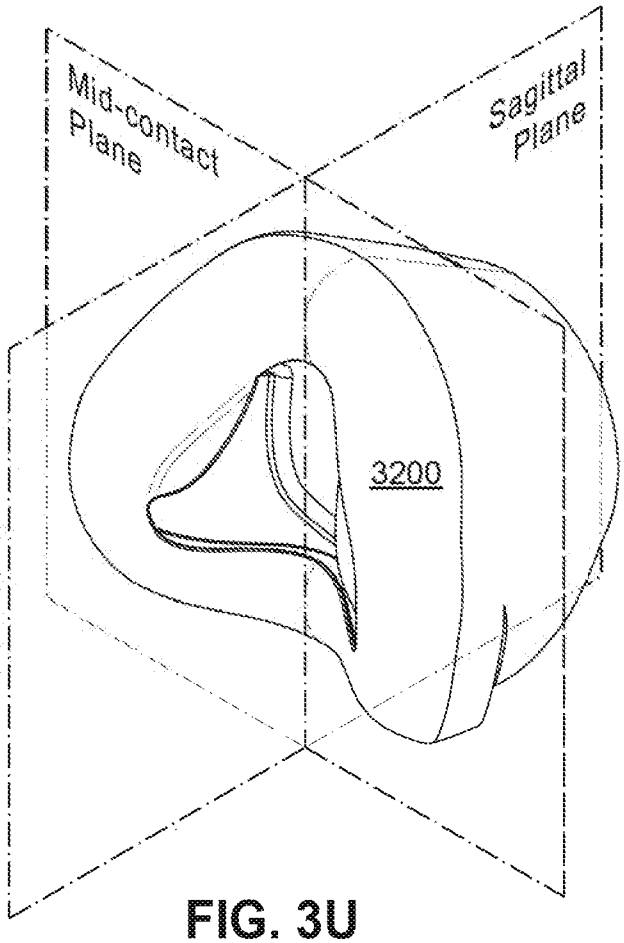

FIG. 3U

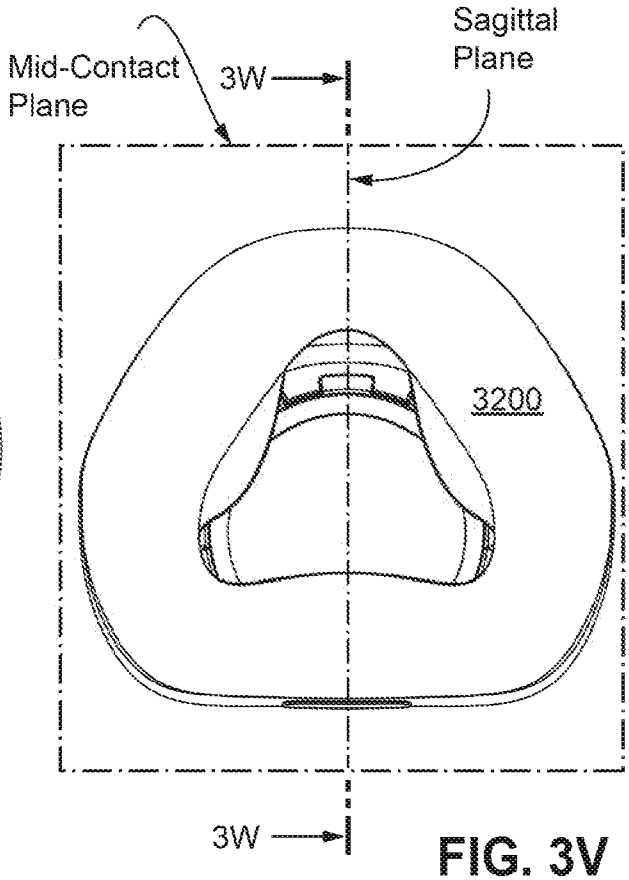

FIG. 3V

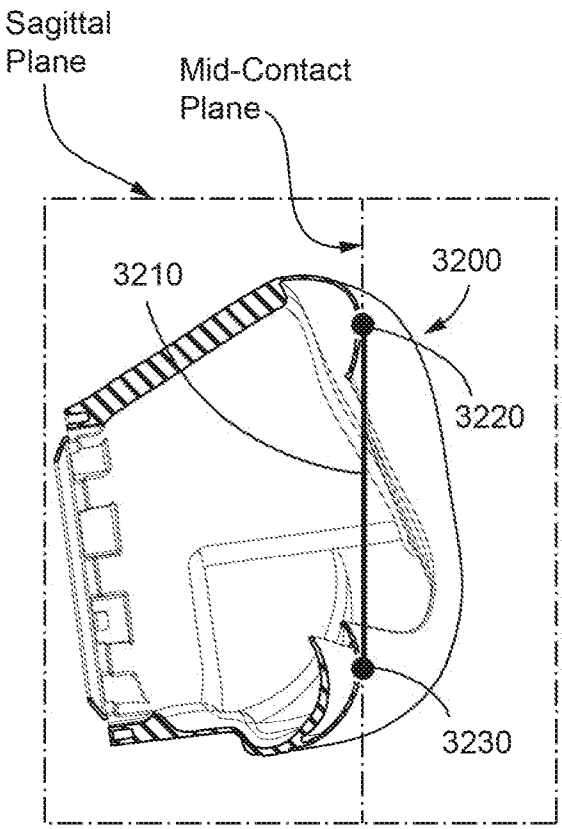

FIG. 3W

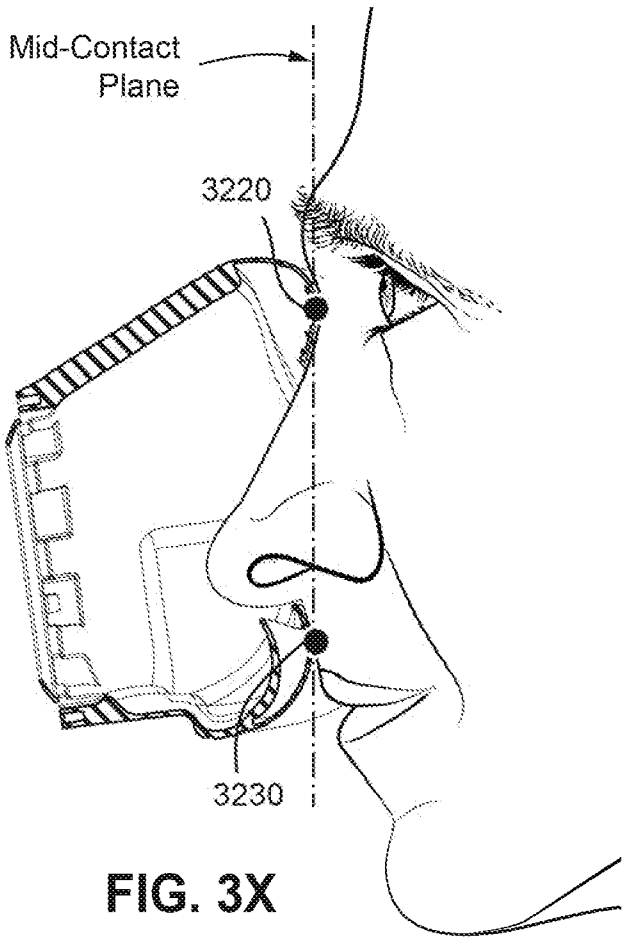

FIG. 3X

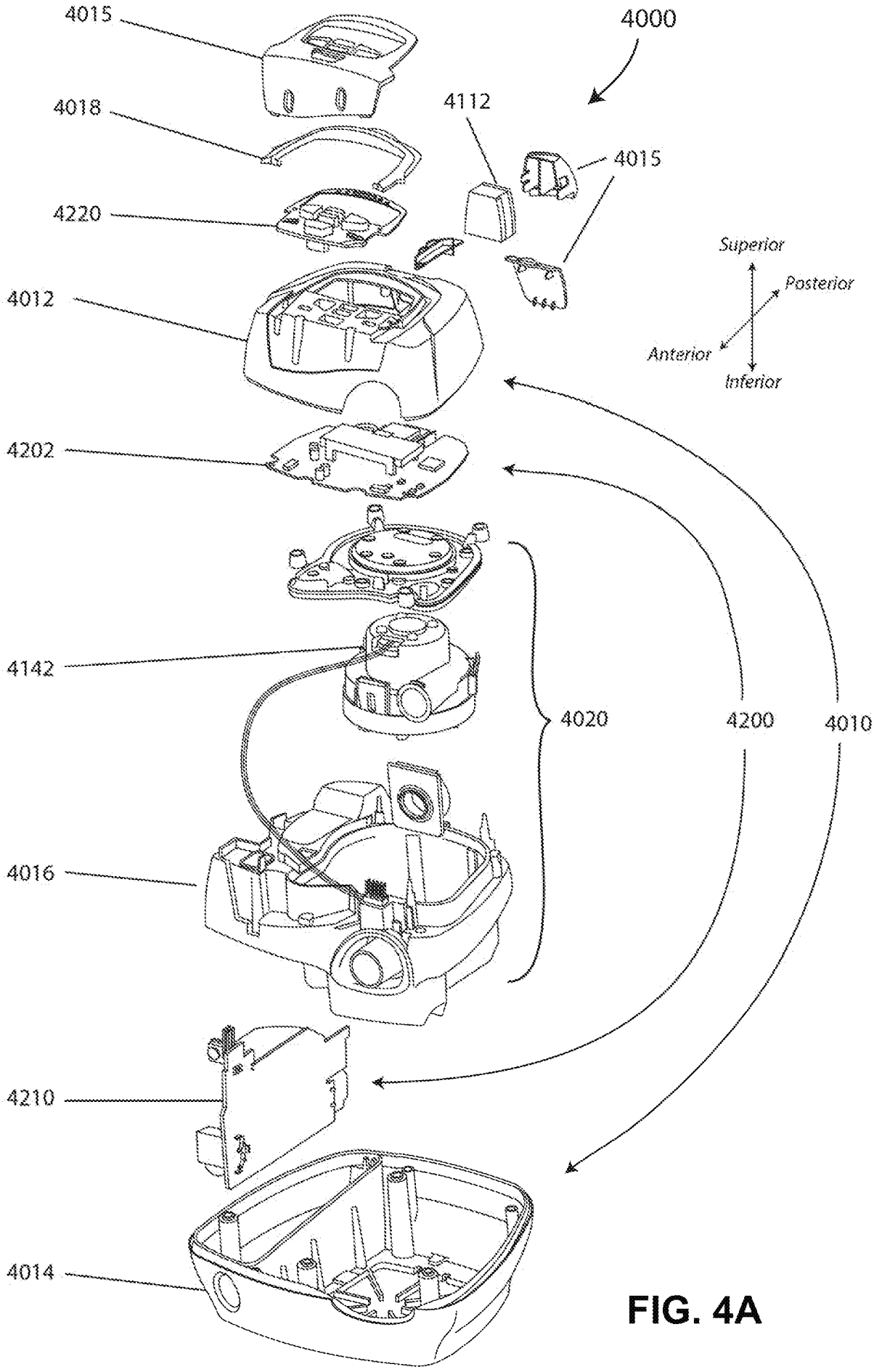
4015
4000
4018
4112
4015
4220
Superior
Posterior
Anterior
Inferior
4012
4202
4142
4020
4200
4010
4016
4210
4014

FIG. 4A

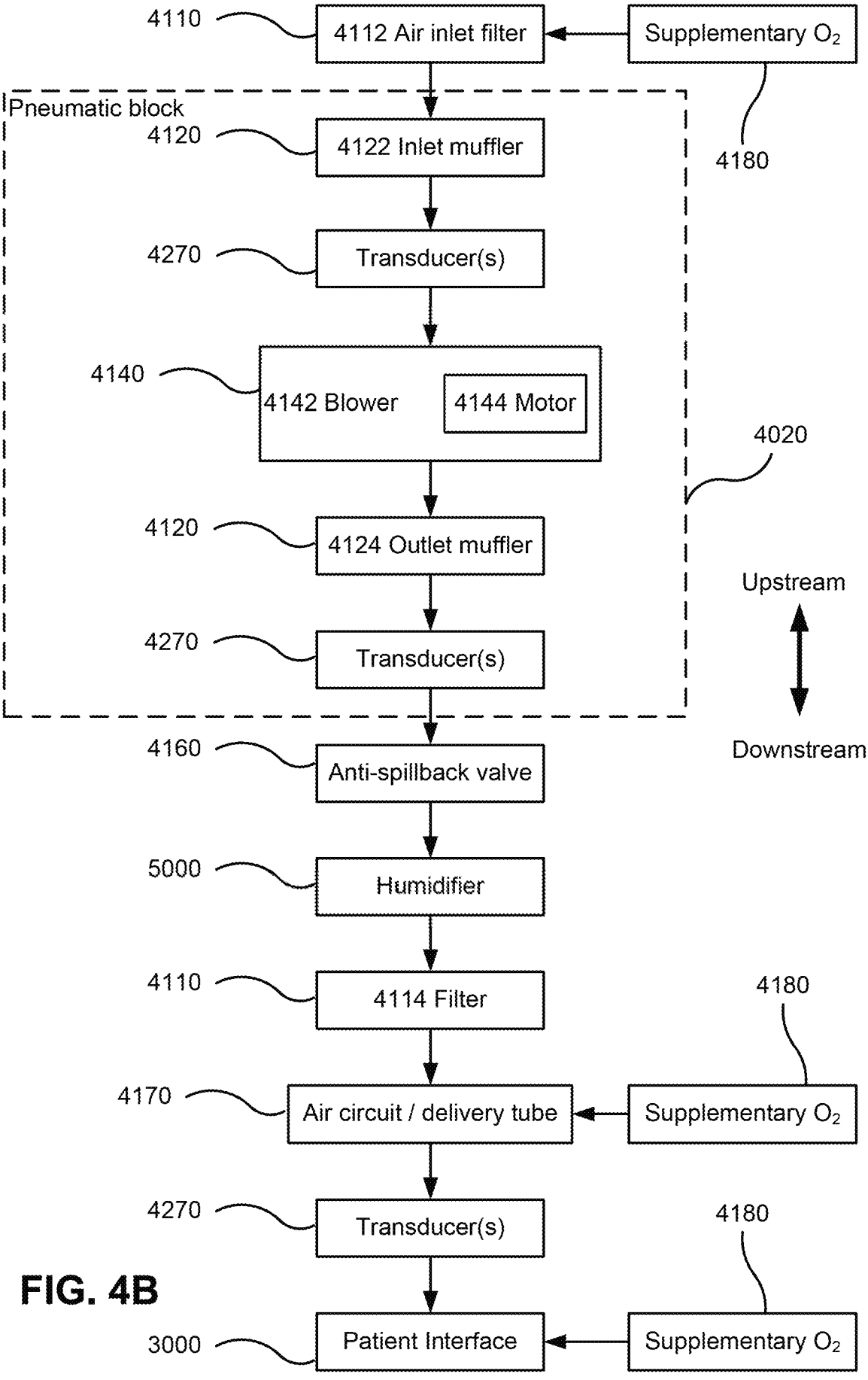
4110
4112 Air inlet filter
Supplementary O_2
4180
Pneumatic block
4120
4122 Inlet muffler
4270
Transducer(s)
4140
4142 Blower
4144 Motor
4020
4120
4124 Outlet muffler
Upstream
4270
Transducer(s)
Downstream
4160
Anti-spillback valve
5000
Humidifier
4110
4114 Filter
4180
4170
Air circuit / delivery tube
Supplementary O_2
4270
Transducer(s)
4180
3000
Patient Interface
Supplementary O_2

FIG. 4B

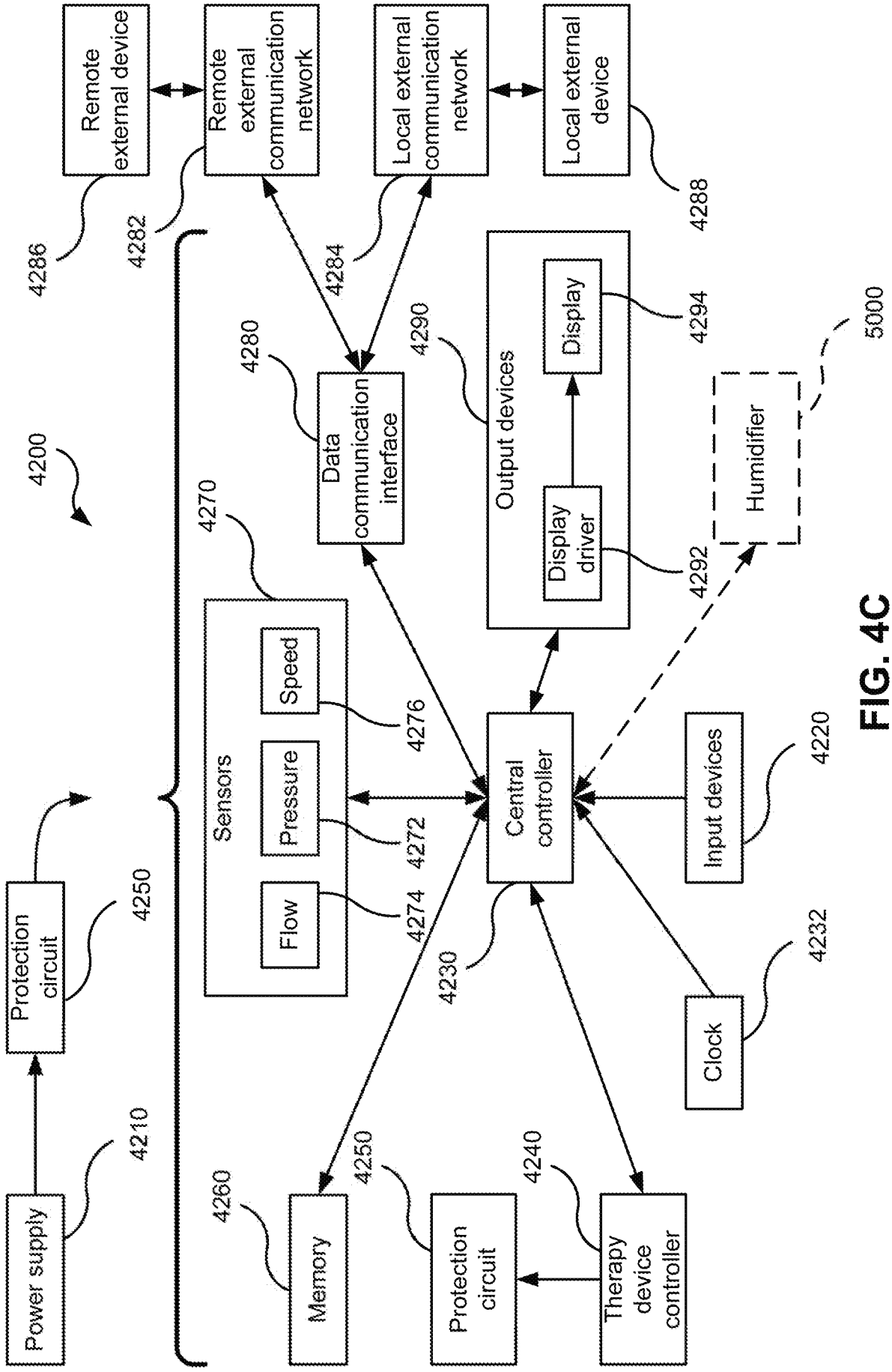
Remote external device
Remote external communication network
Local external communication network
Local external device
4286
4282
4284
4288
4200
4280
Data communication interface
4290
Output devices
Display
4294
Display driver
4292
Humidifier
5000
4270
Sensors
Speed
Pressure
Flow
4276
4272
4274
Central controller
Input devices
4220
4230
Clock
4232
Power supply
4210
Protection circuit
4250
4260
Memory
4250
Protection circuit
4240
Therapy device controller

FIG. 4C

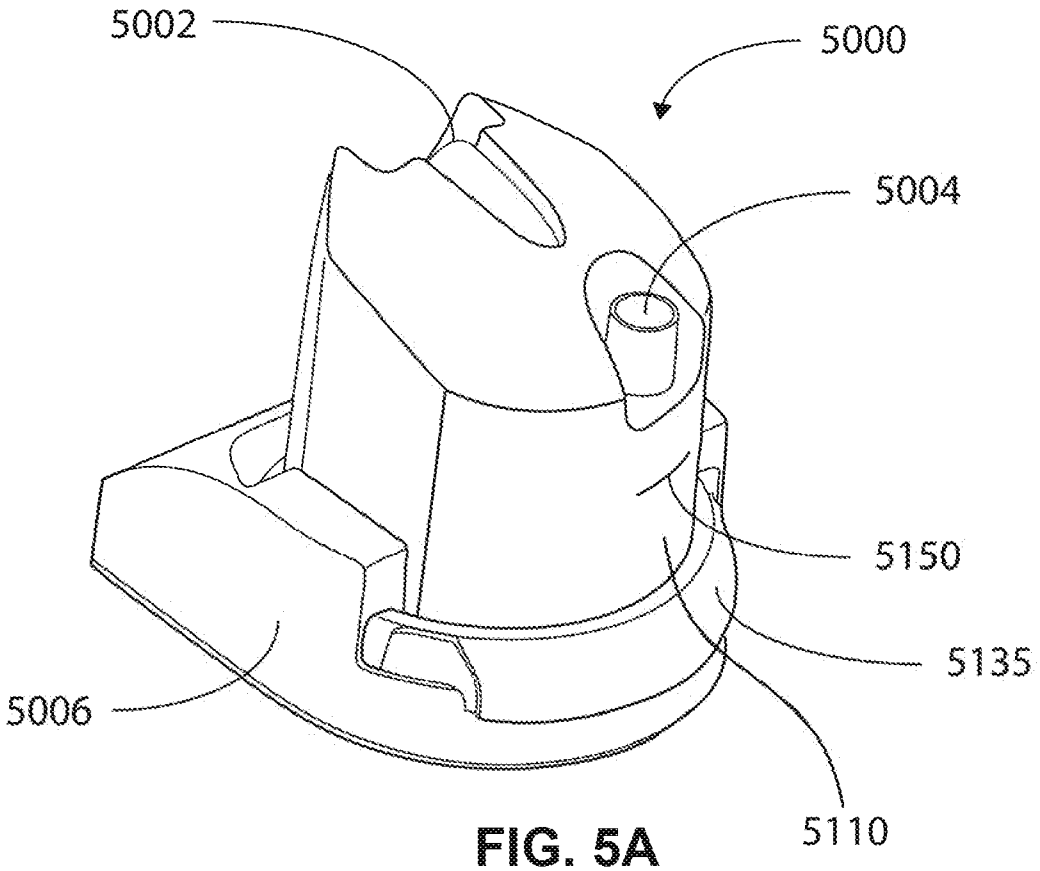
5002
5000
5004
5150
5135
5006
5110

FIG. 5A

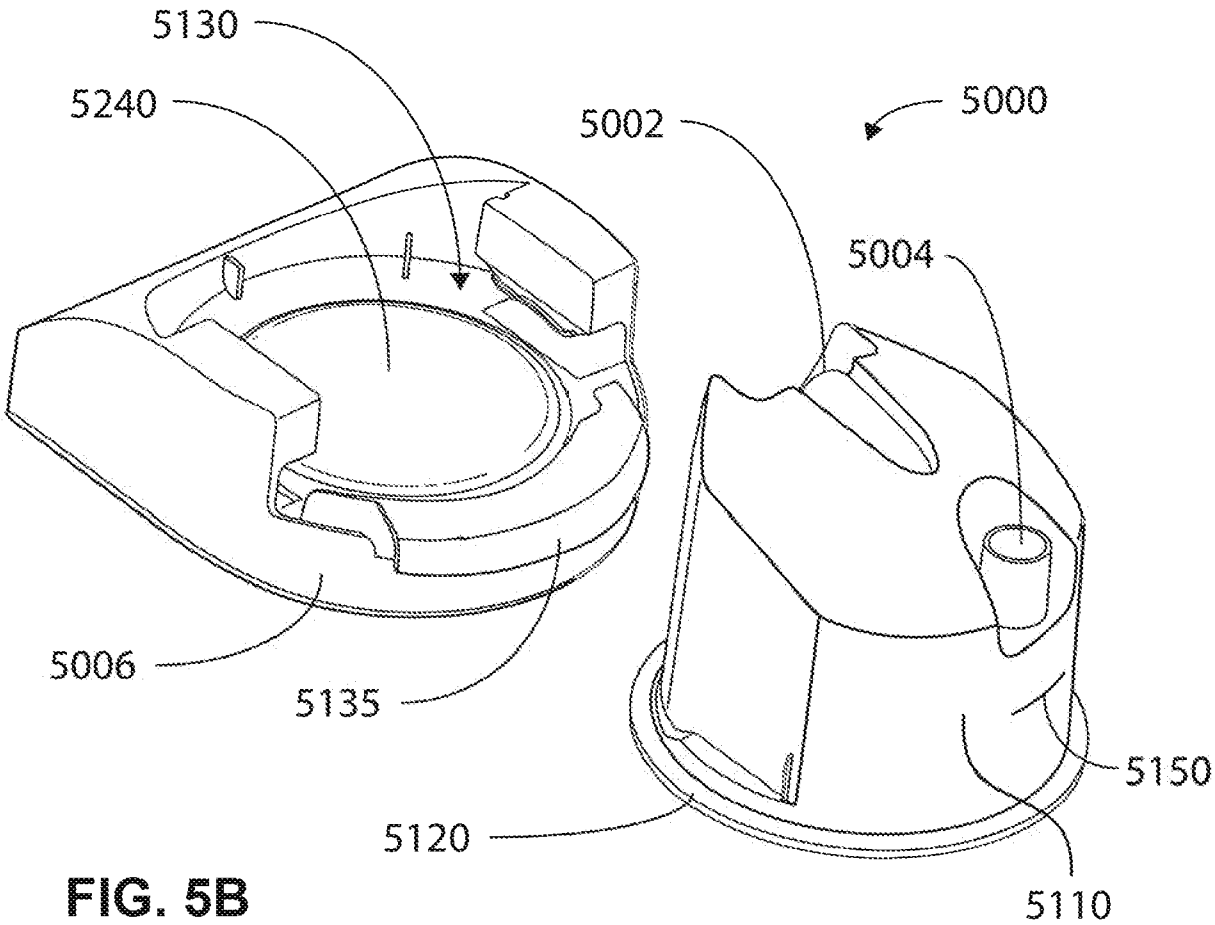
5130
5240
5002
5000
5004
5006
5135
5150
5120
5110

FIG. 5B

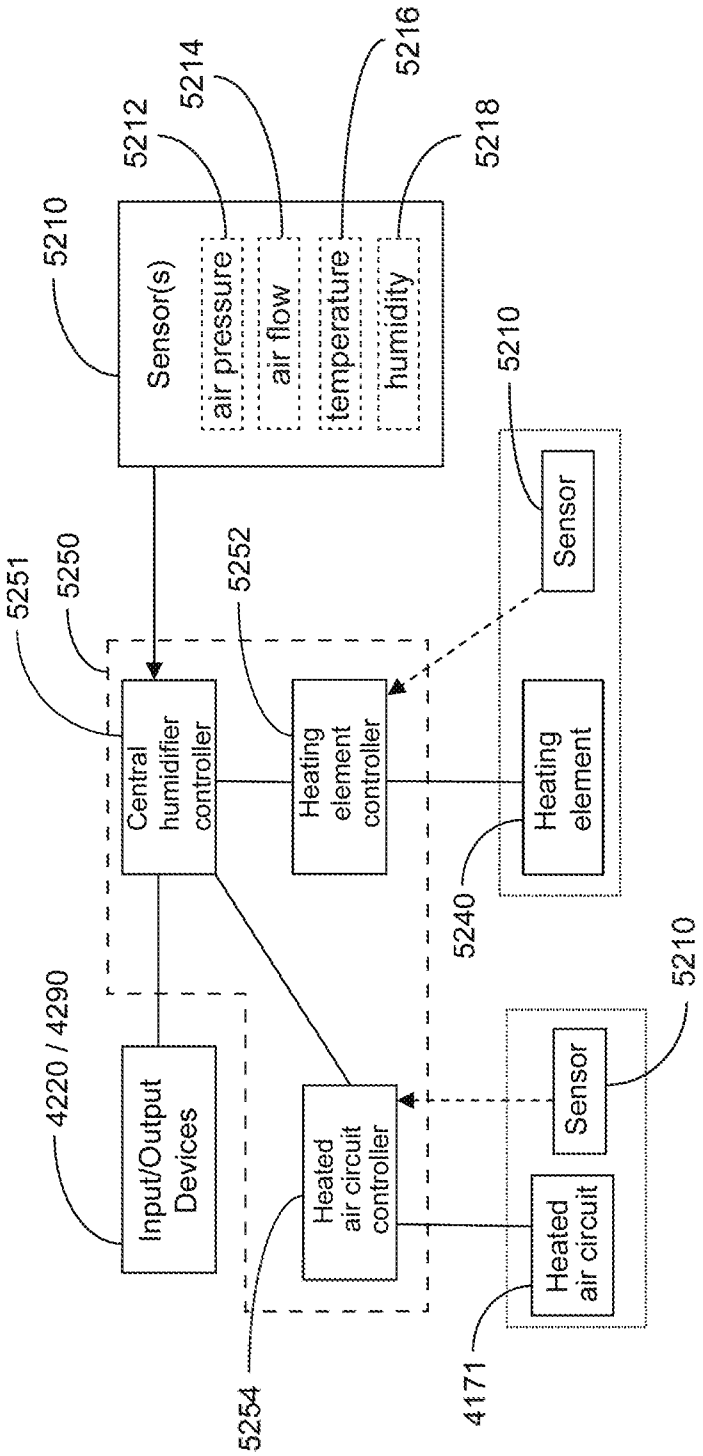
5210
Sensor(s)
5212
air pressure
5214
air flow
5216
temperature
5218
humidity
5210
Sensor
5251
5250
5252
Central humidifier controller
Heating element controller
Heating element
5240
4220 / 4290
Input/Output Devices
Heated air circuit controller
5210
Sensor
Heated air circuit
5254
4171

FIG. 5C

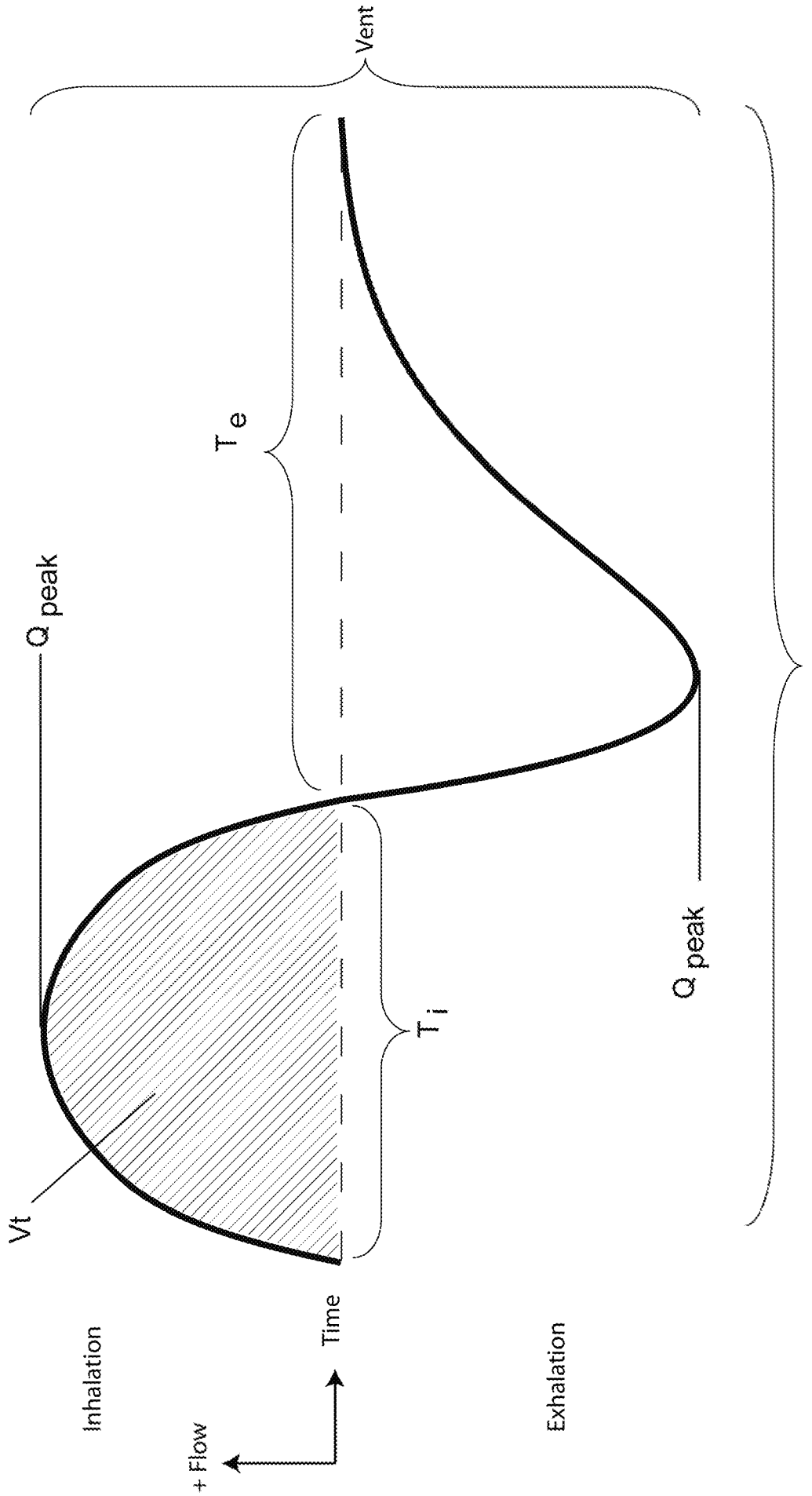
Vent
T e
Q peak
T i
Q peak
T tot
Vt
Inhalation
Time
+ Flow
Exhalation

FIG. 6

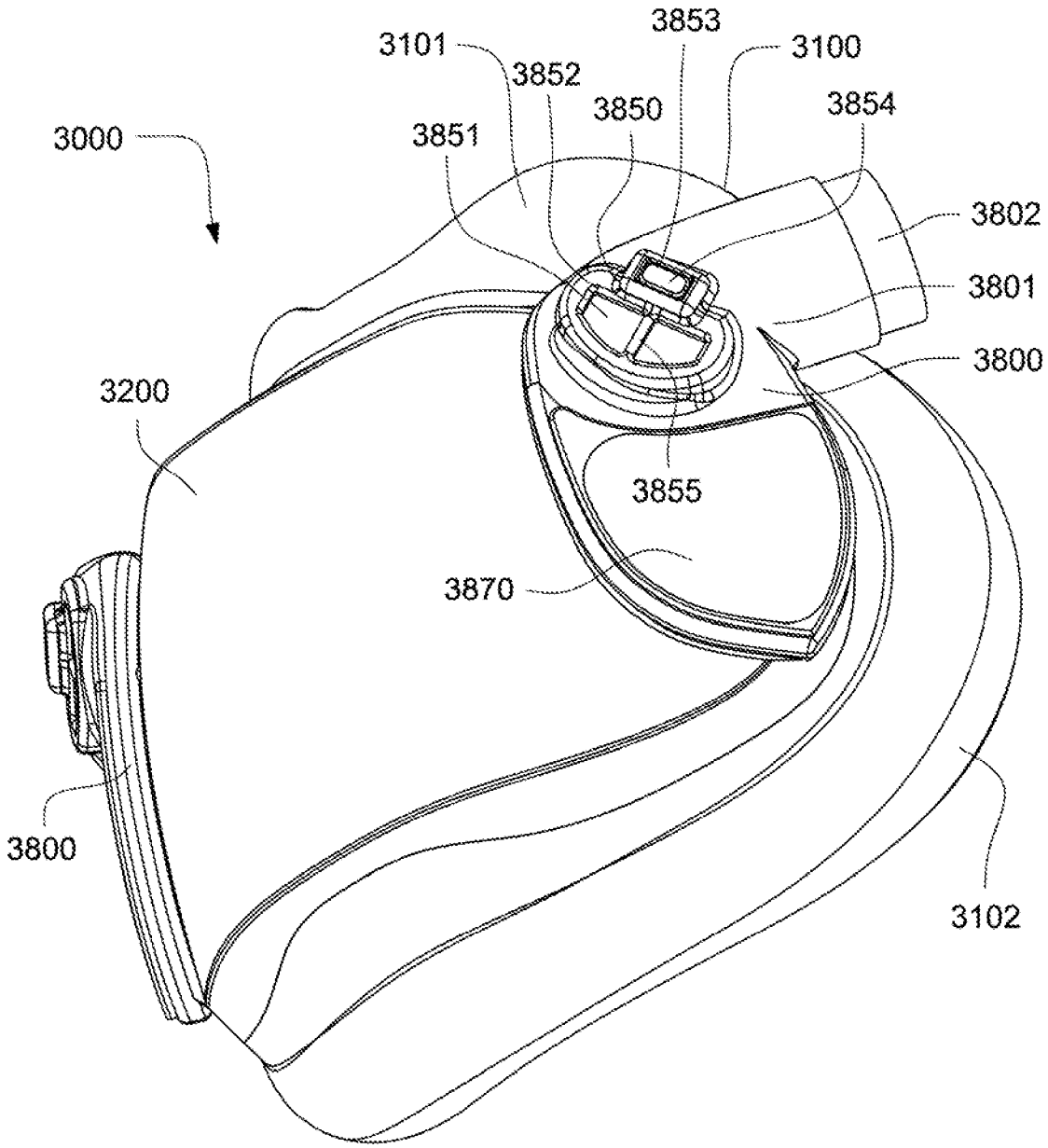
3000
3101
3852
3853
3100
3850
3854
3851
3802
3801
3800
3200
3855
3870
3800
3102

Fig. 7

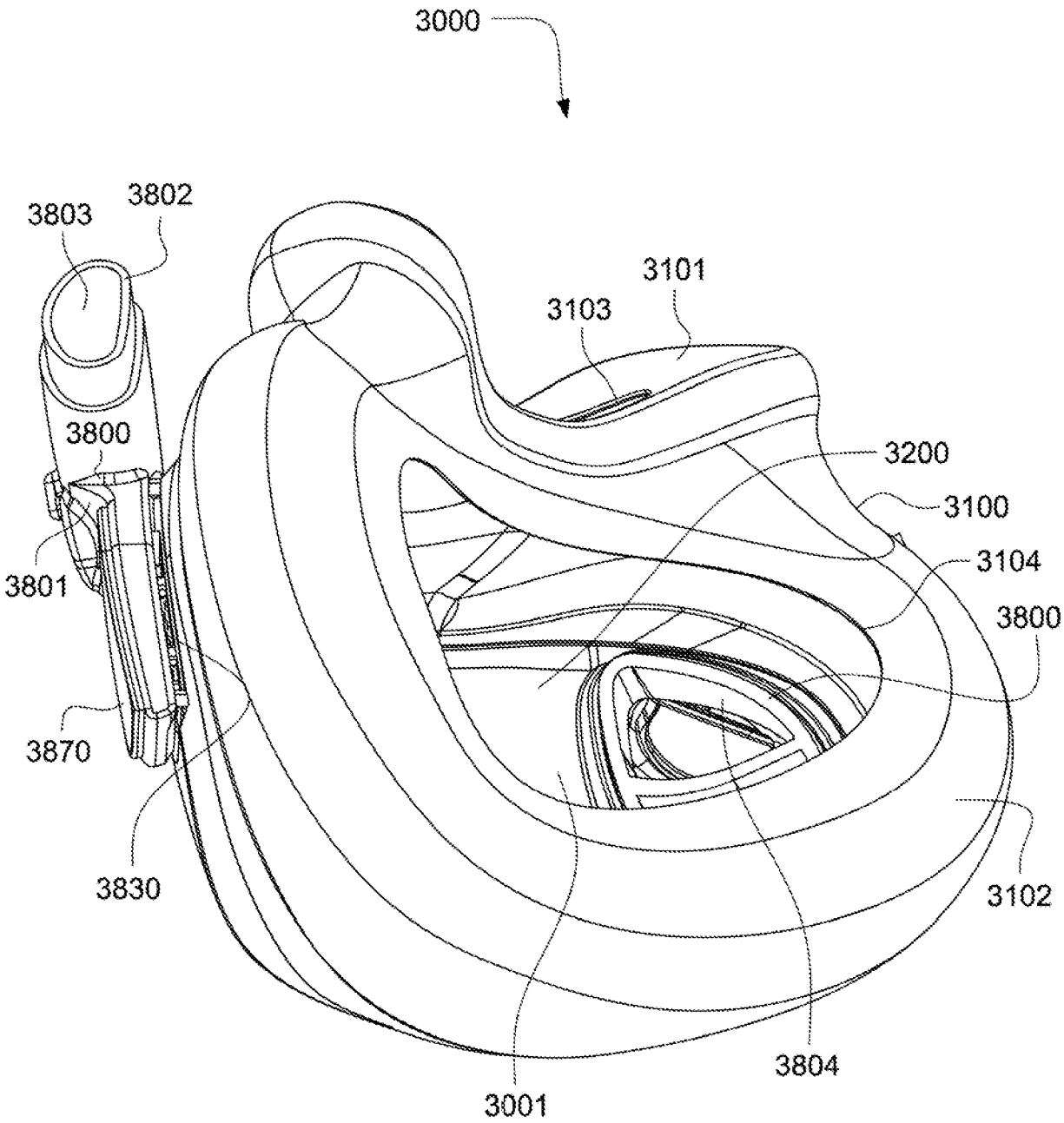
3000
3803
3802
3101
3103
3800
3200
3100
3104
3801
3800
3870
3830
3102
3804
3001

Fig. 8

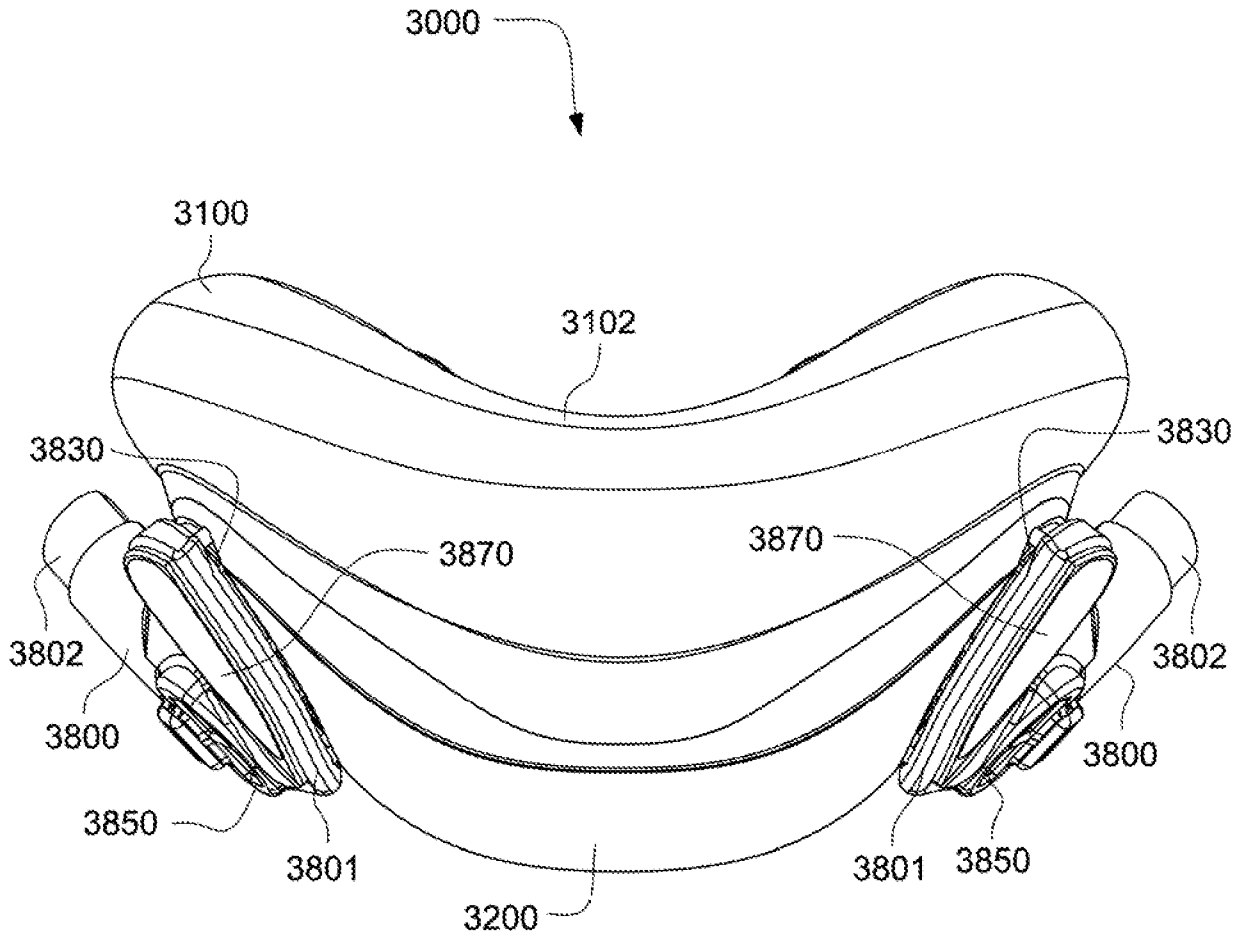
3000
3100
3102
3830
3830
3870
3870
3802
3802
3800
3800
3850
3850
3801
3801
3200

Fig. 9

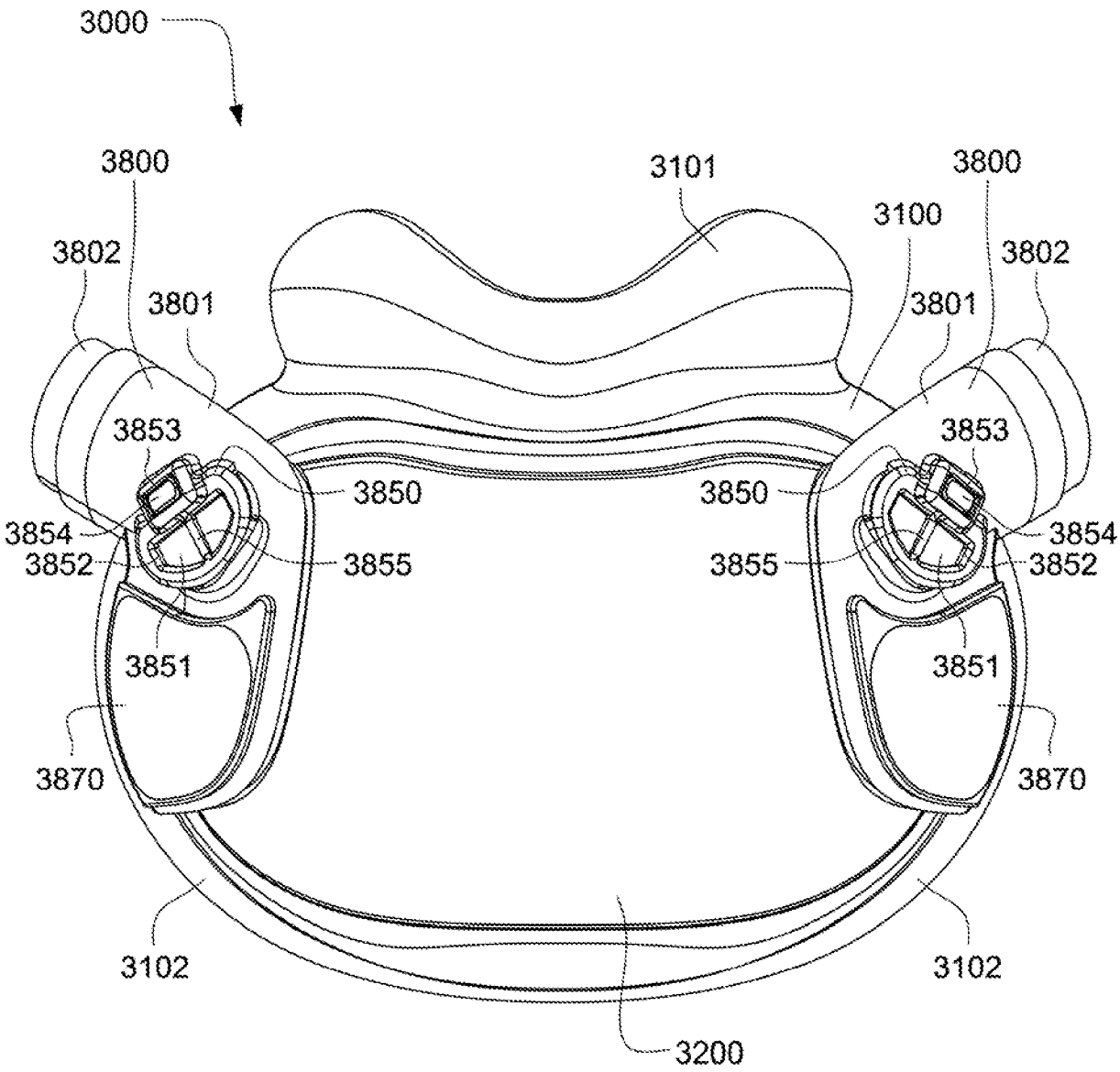
3000
3800
3101
3800
3100
3802
3802
3801
3801
3853
3853
3850
3850
3854
3854
3852
3855
3855
3852
3851
3851
3870
3870
3102
3102
3200

Fig. 10

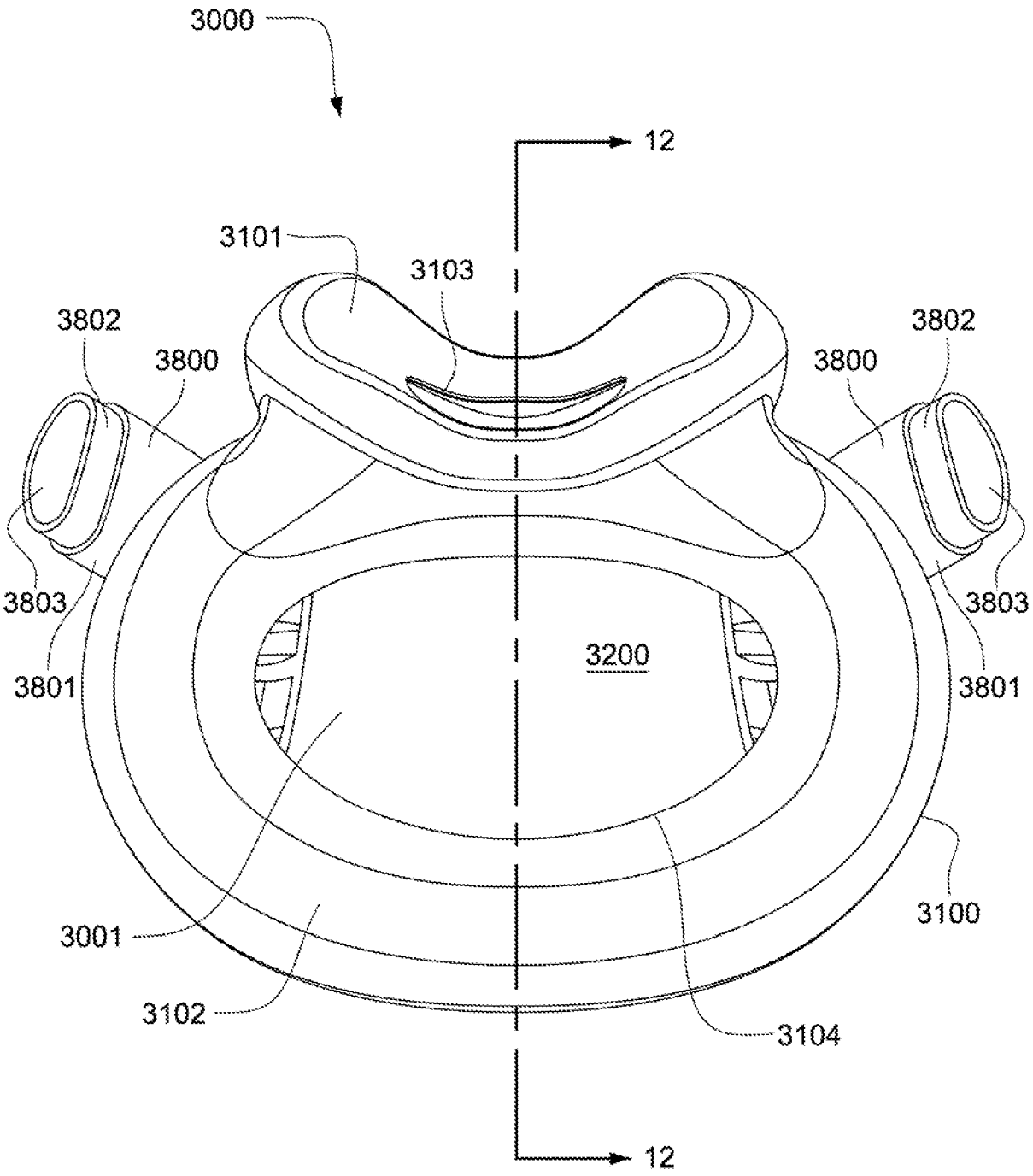
3000
12
3101
3103
3802
3800
3802
3800
3803
3803
3801
3801
3200
3001
3102
3104
3100
12

Fig. 11

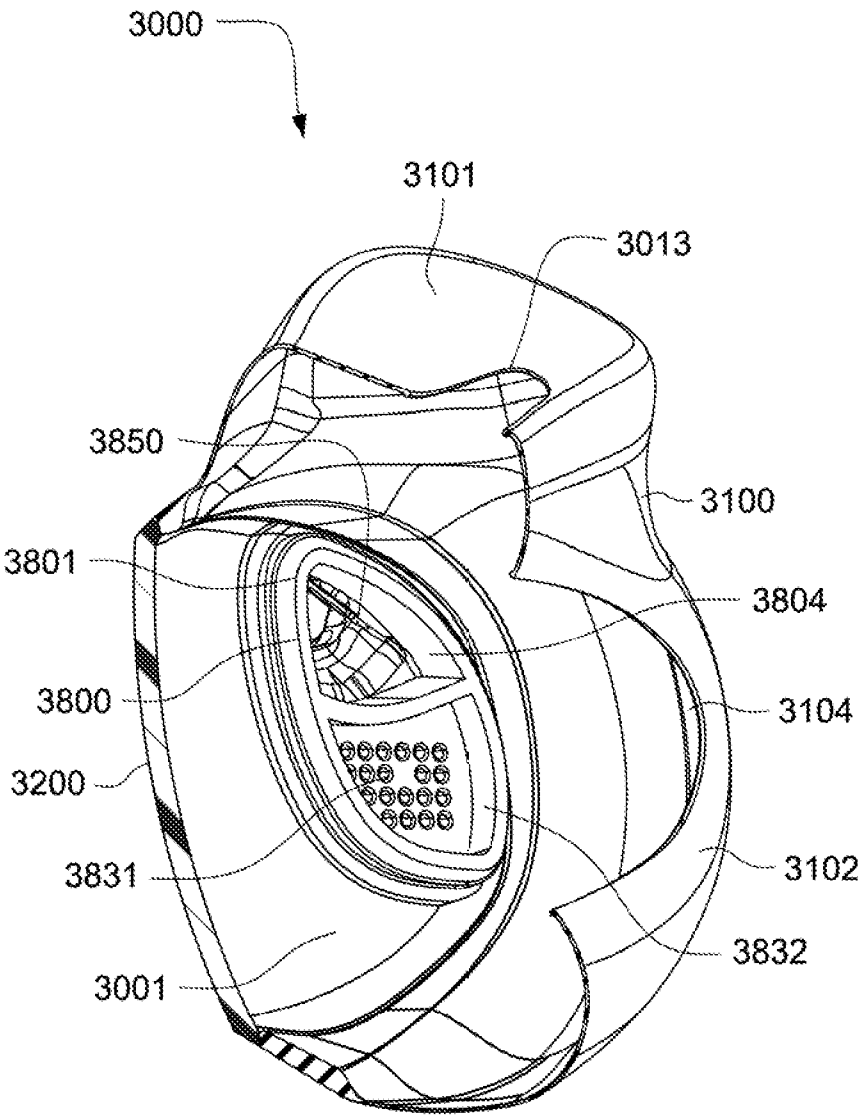
3000
3101
3013
3850
3100
3801
3804
3800
3104
3200
3831
3102
3832
3001

Fig. 12

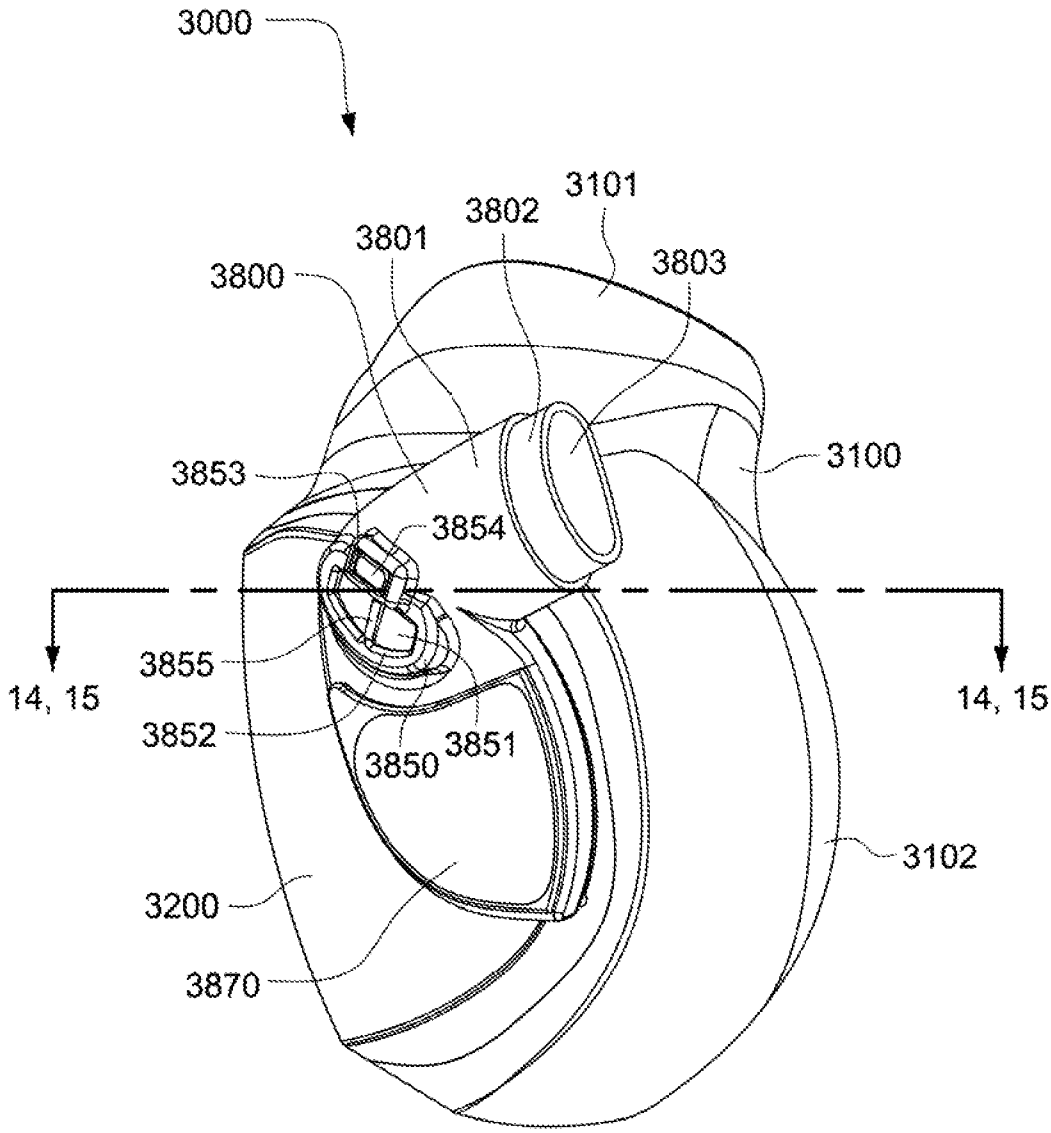
3000
3101
3802
3801
3803
3800
3100
3853
3854
14, 15
14, 15
3855
3852
3850
3851
3102
3200
3870

Fig. 13

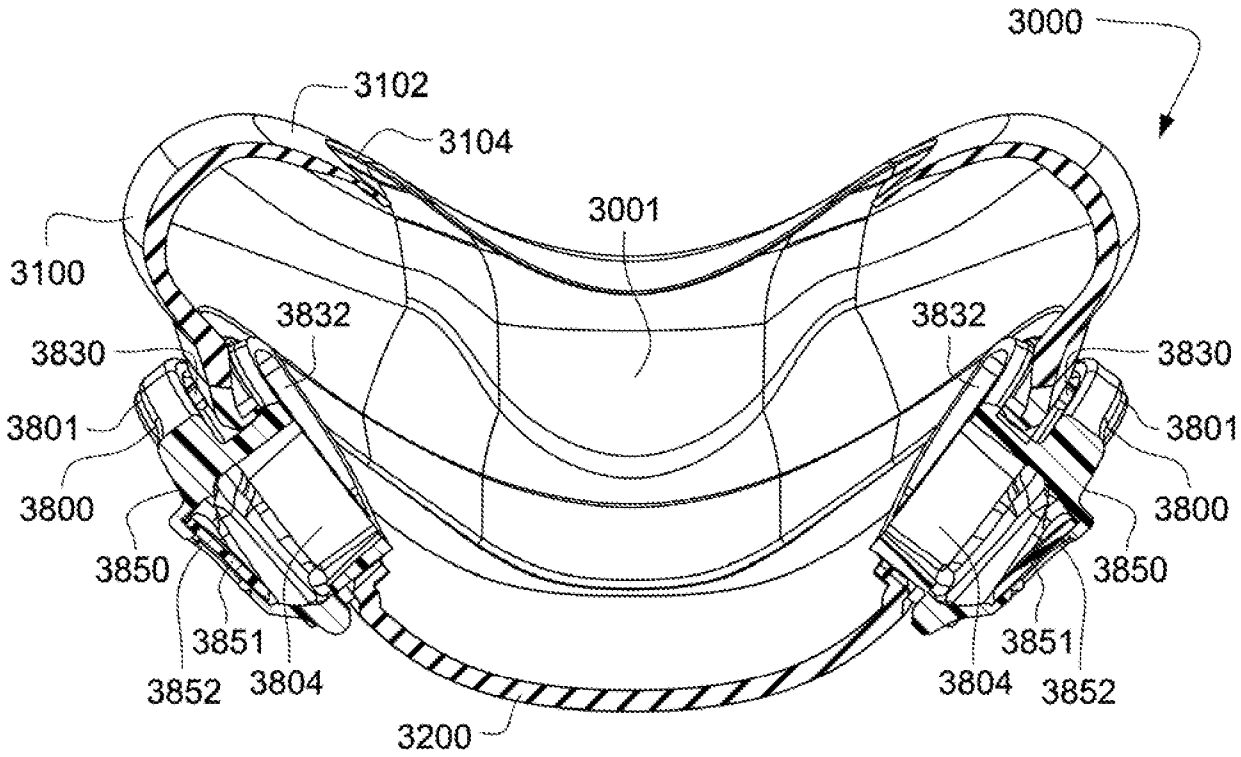
3000
3102
3104
3001
3100
3832
3832
3830
3830
3801
3801
3800
3800
3850
3850
3851
3851
3852
3804
3804
3852
3200

Fig. 14

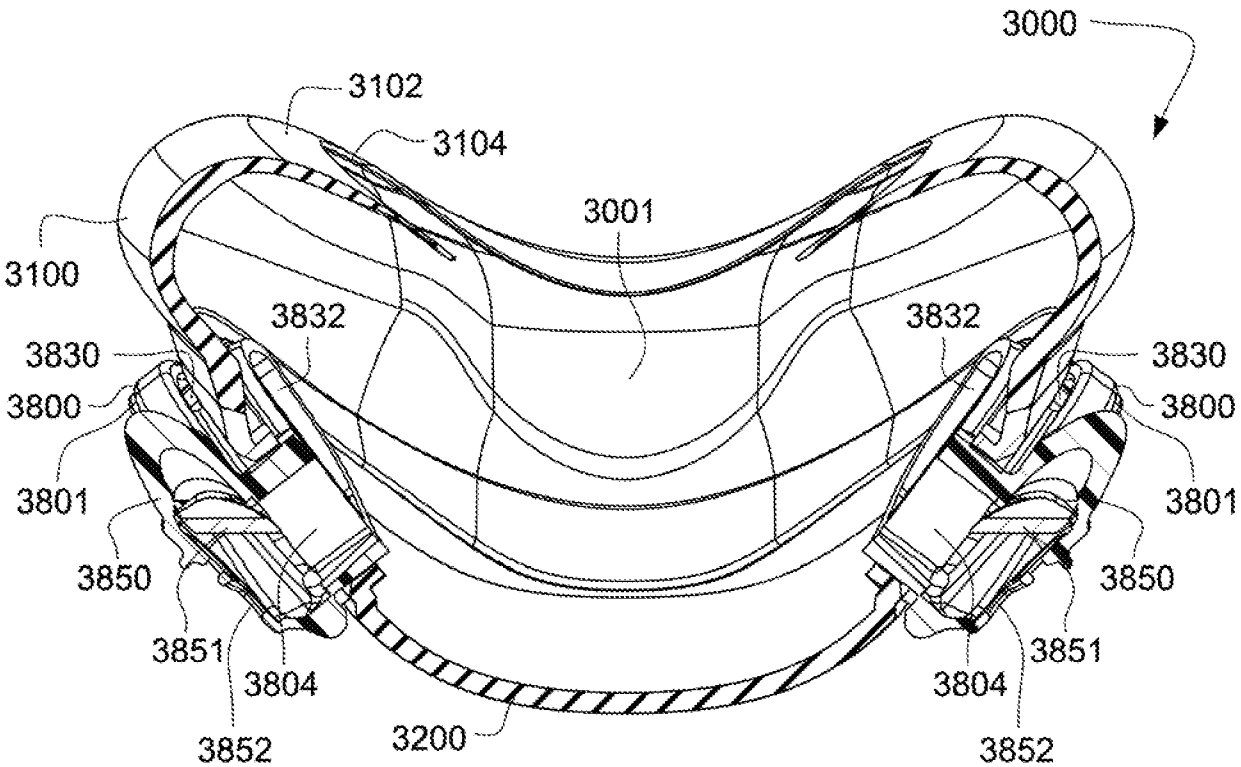
3000
3102
3104
3001
3100
3832
3832
3830
3830
3800
3800
3801
3801
3850
3850
3851
3851
3804
3804
3852
3852
3200

Fig. 15

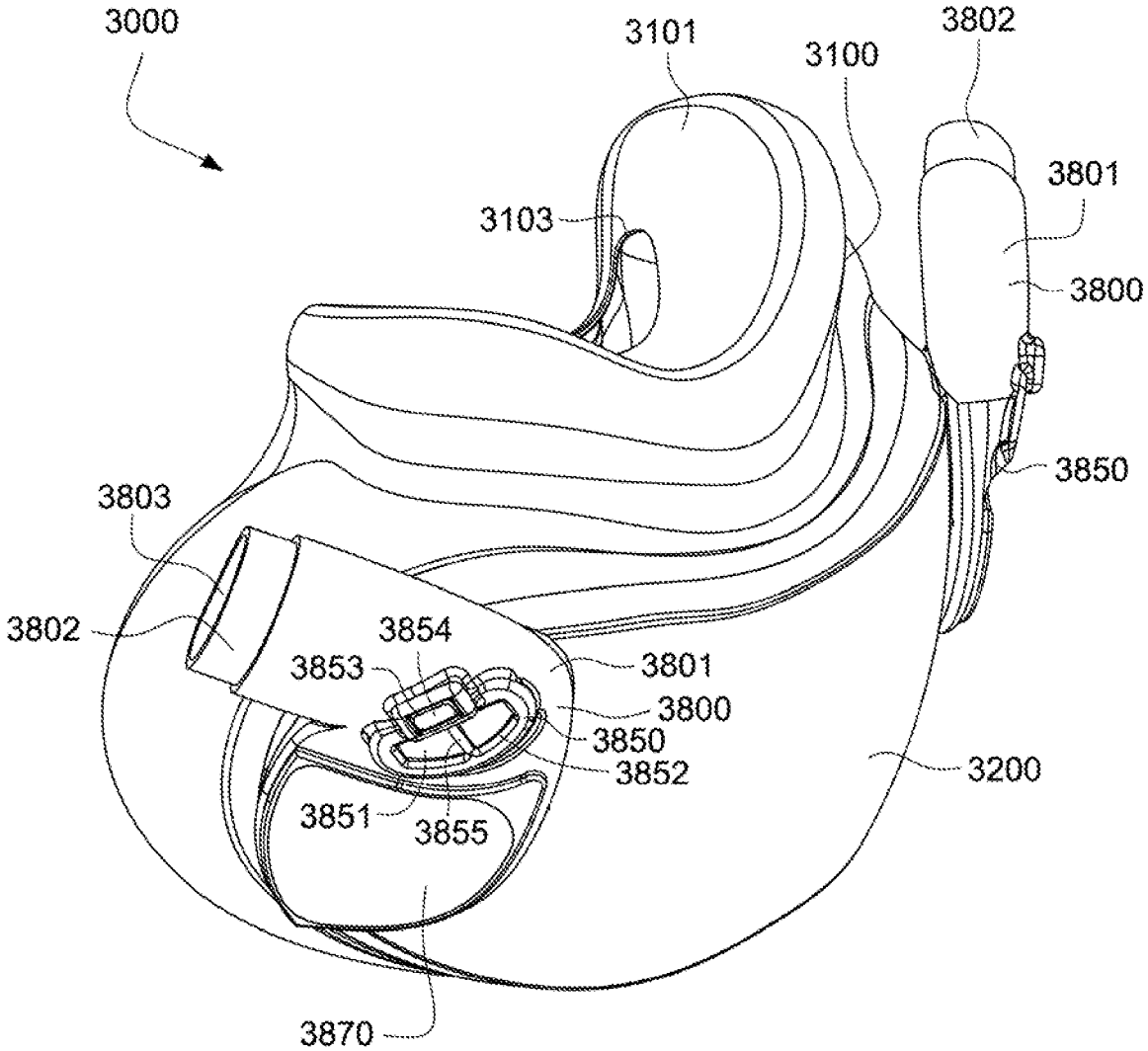
3000
3101
3100
3802
3801
3103
3800
3850
3803
3802
3854
3853
3801
3800
3850
3852
3200
3851
3855
3870

Fig. 16

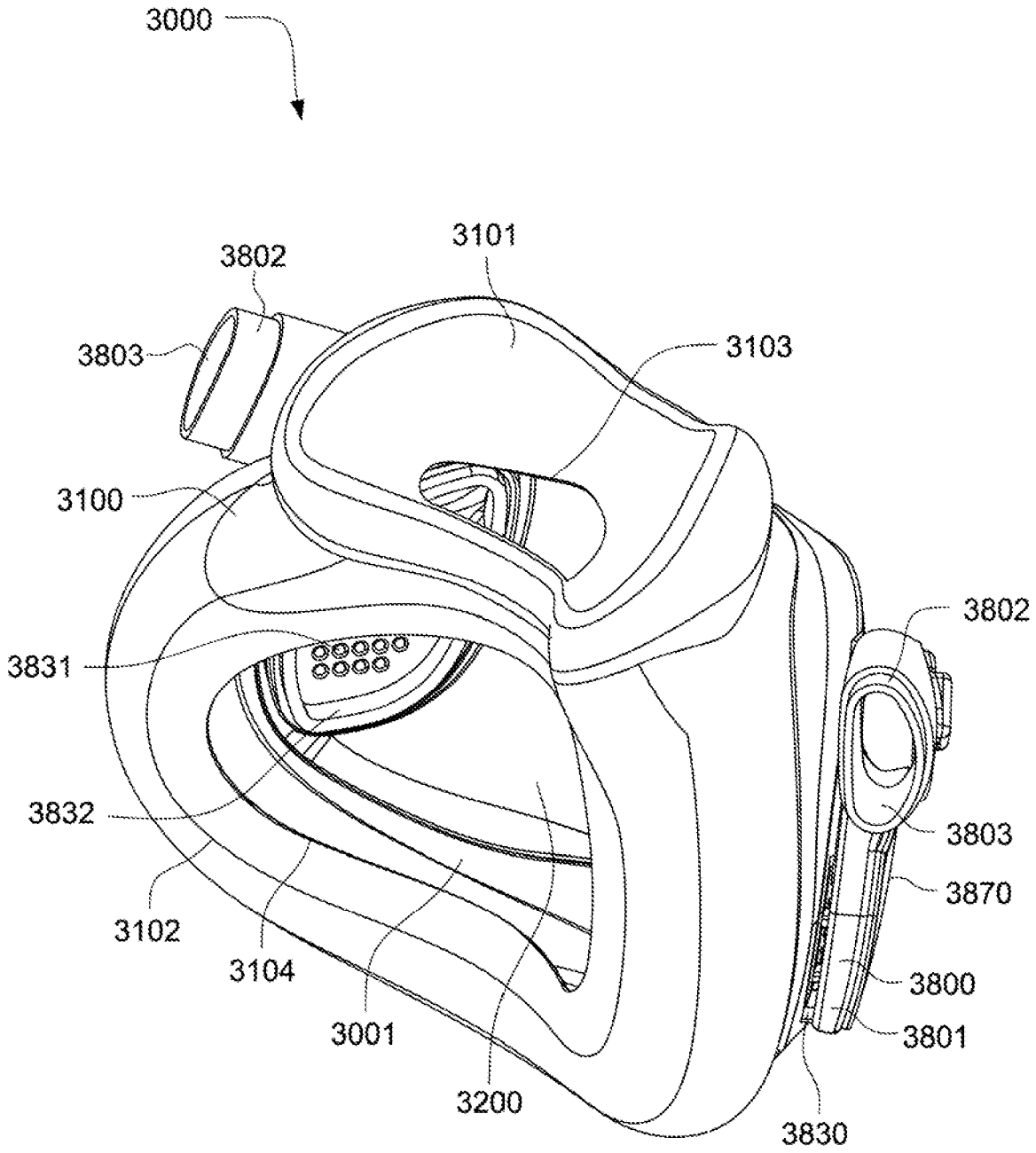
3000
3802
3101
3803
3103
3100
3802
3831
3832
3803
3870
3102
3104
3800
3001
3801
3200
3830

Fig. 17

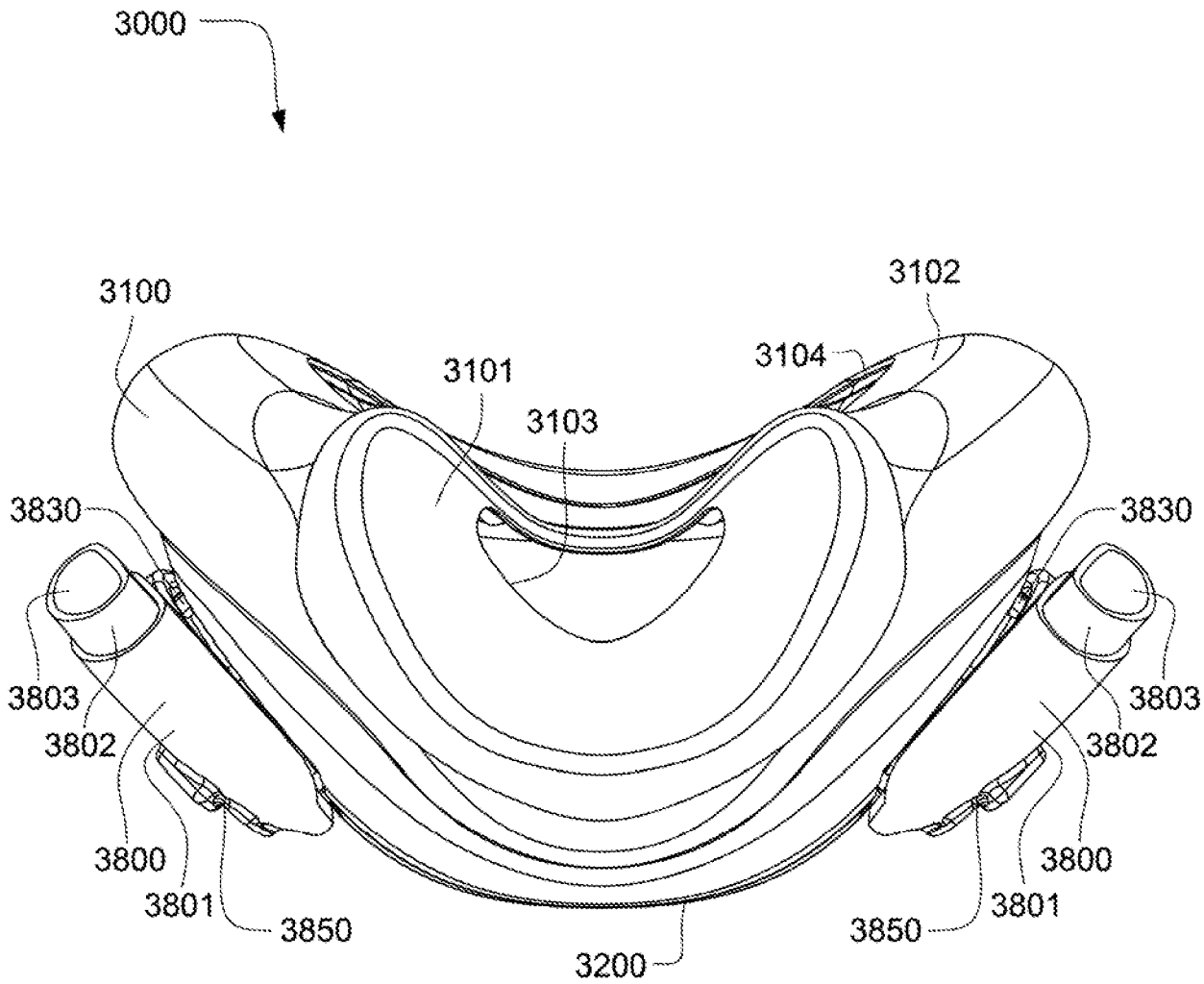
3000
3100
3102
3101
3104
3103
3830
3830
3803
3803
3802
3802
3800
3800
3801
3801
3850
3850
3200

Fig. 18

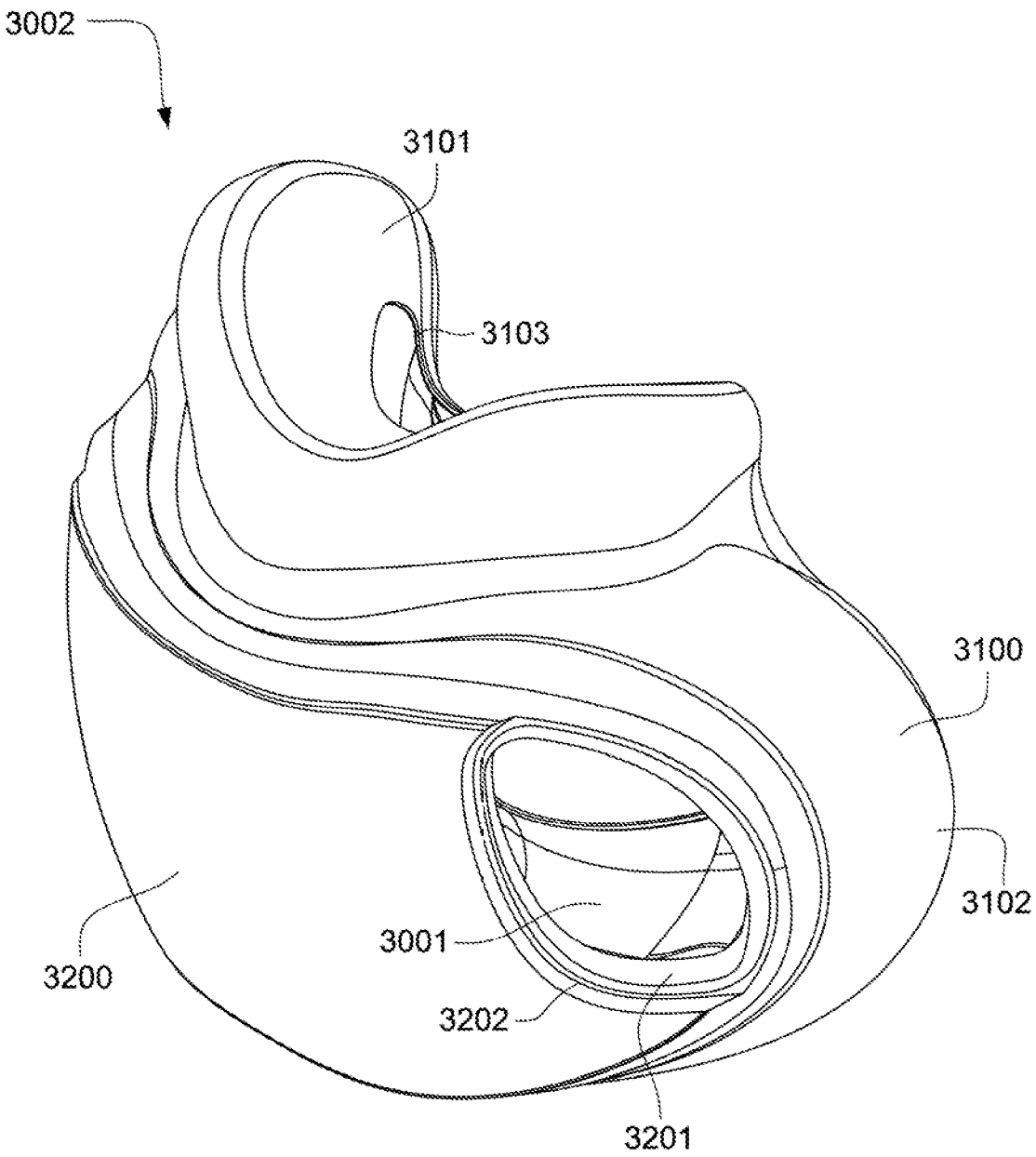

Fig. 19

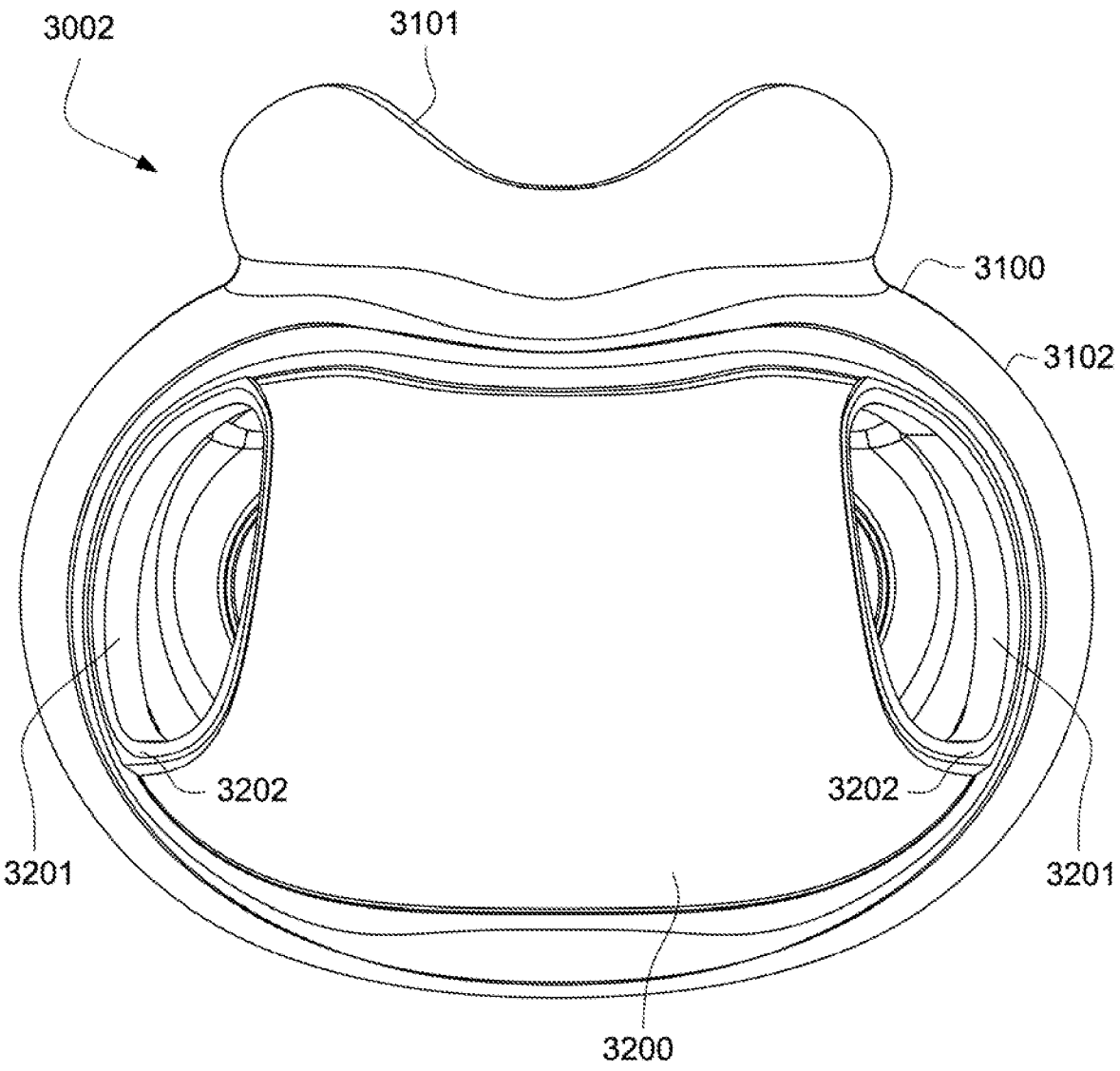

Fig. 20

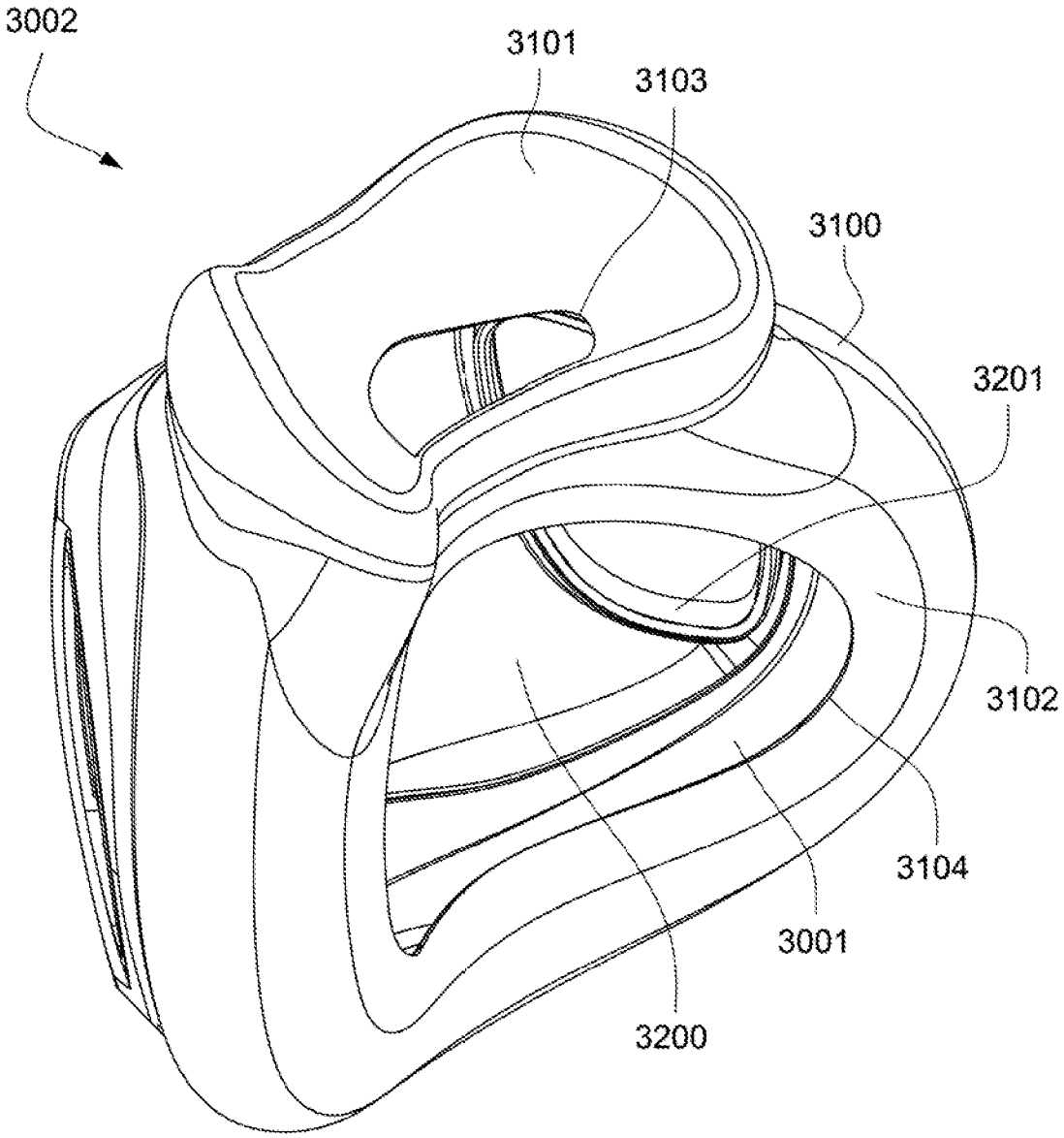

Fig. 21

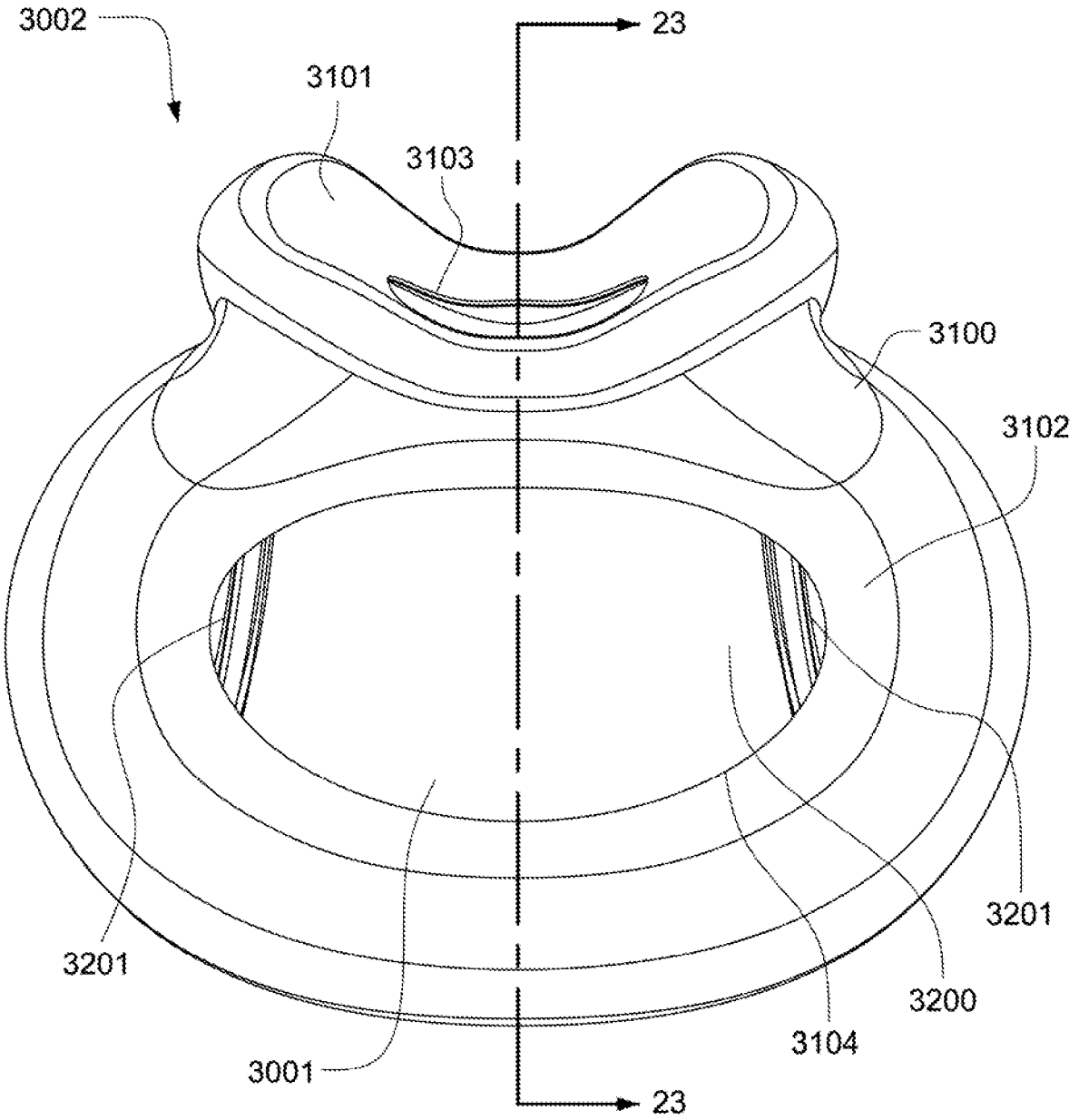

Fig. 22

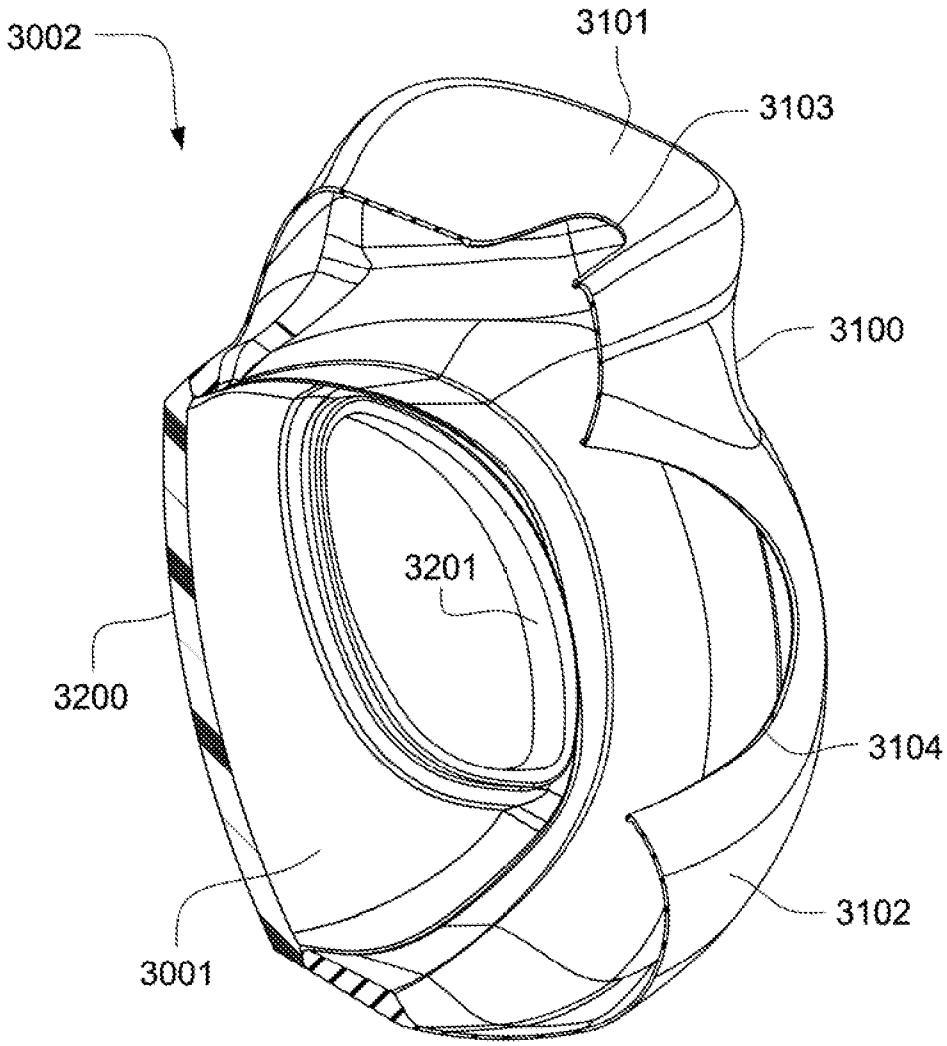

Fig. 23

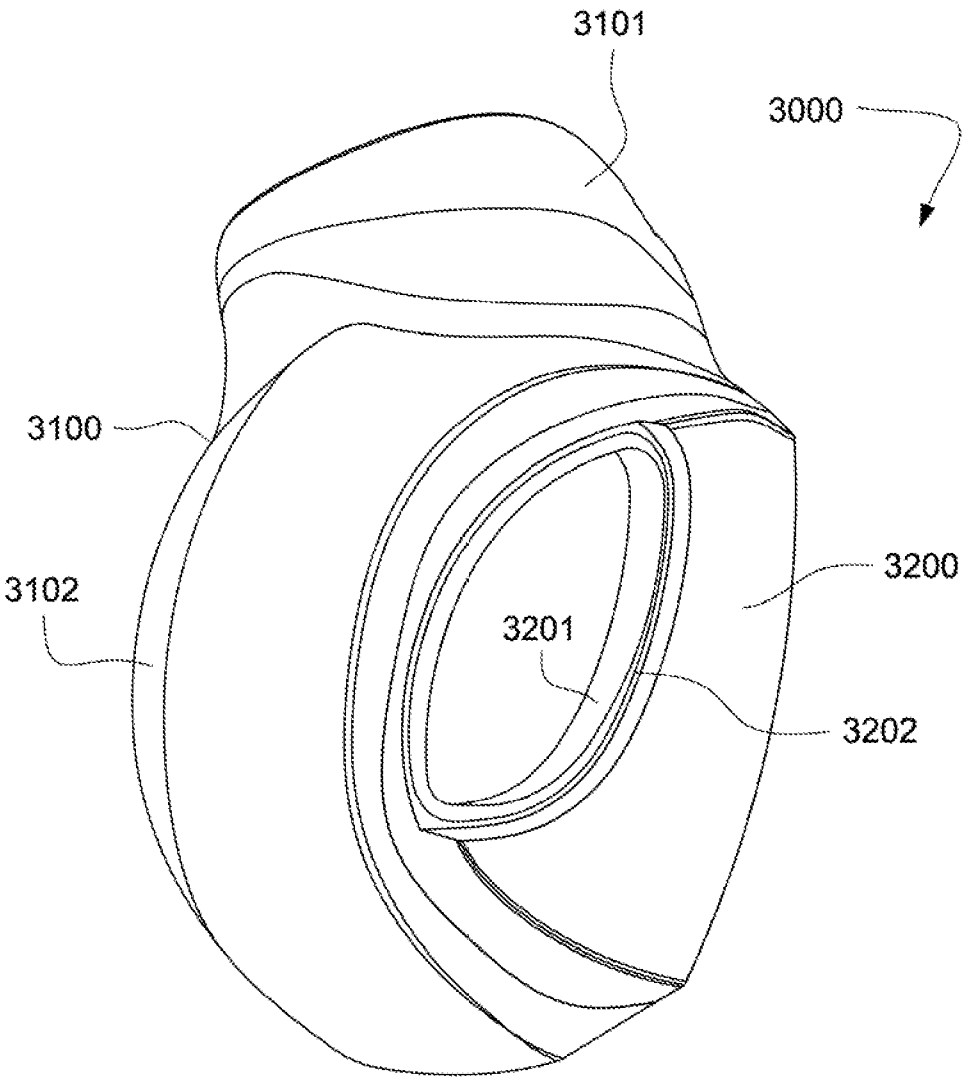

Fig. 24

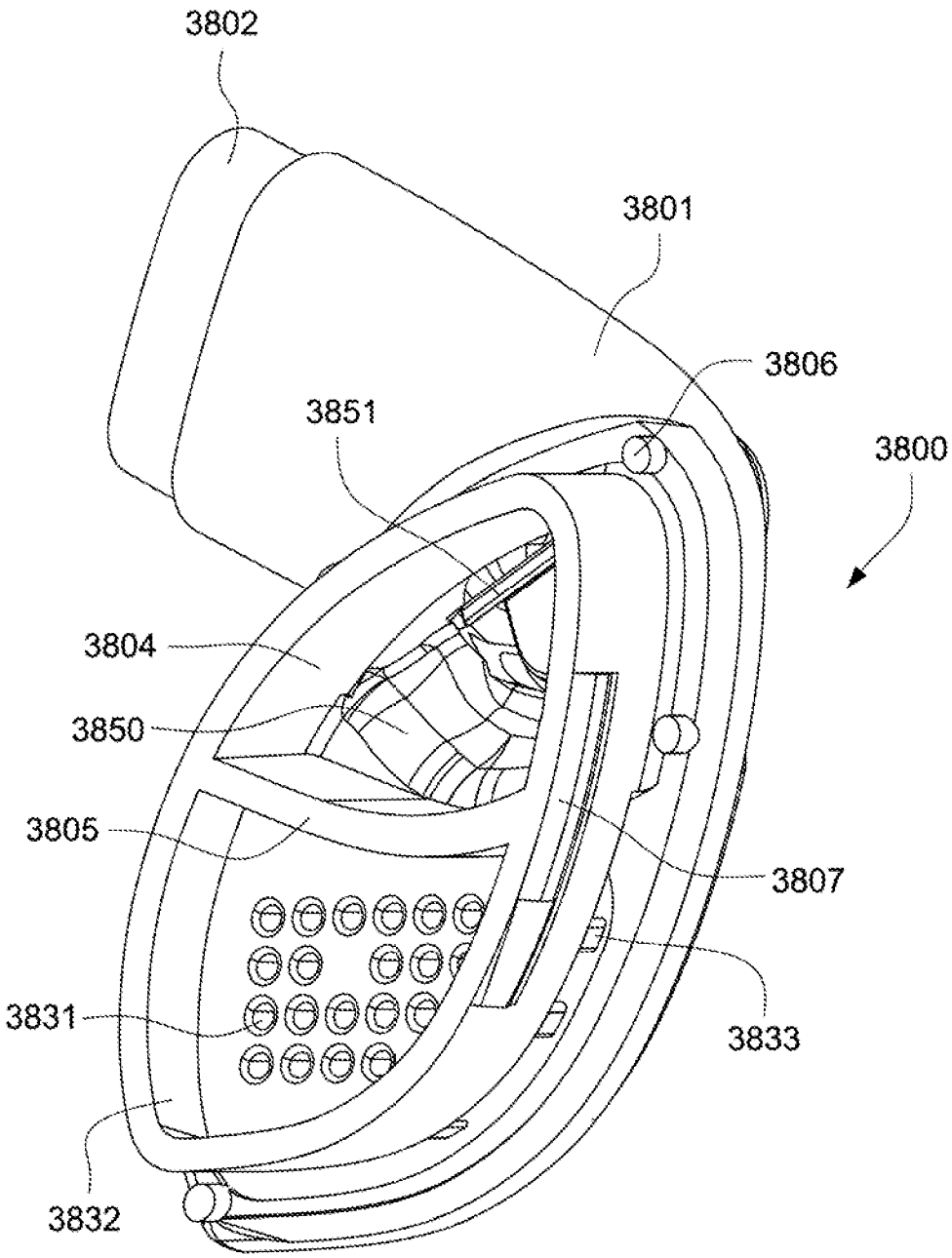

Fig. 25

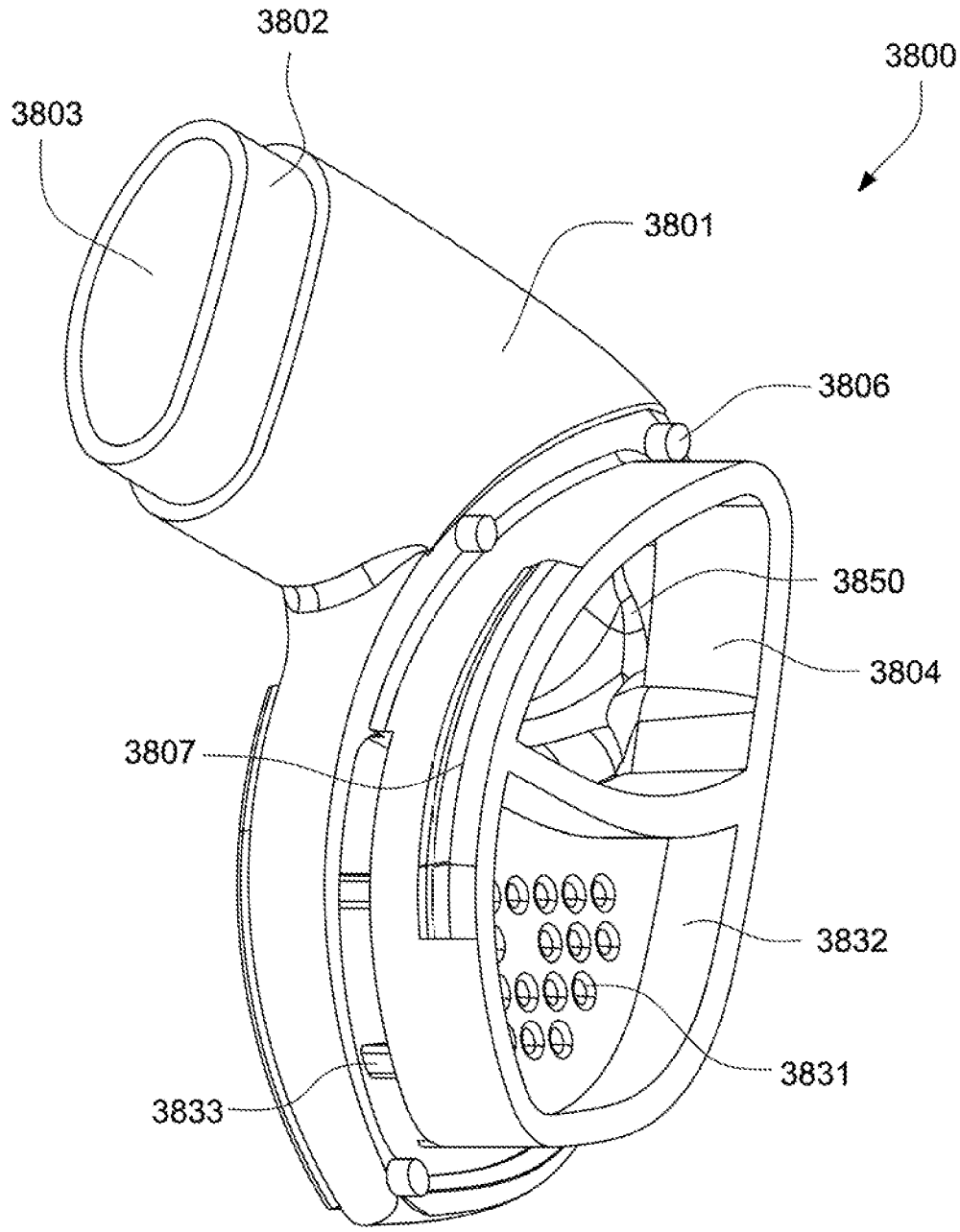

Fig. 26

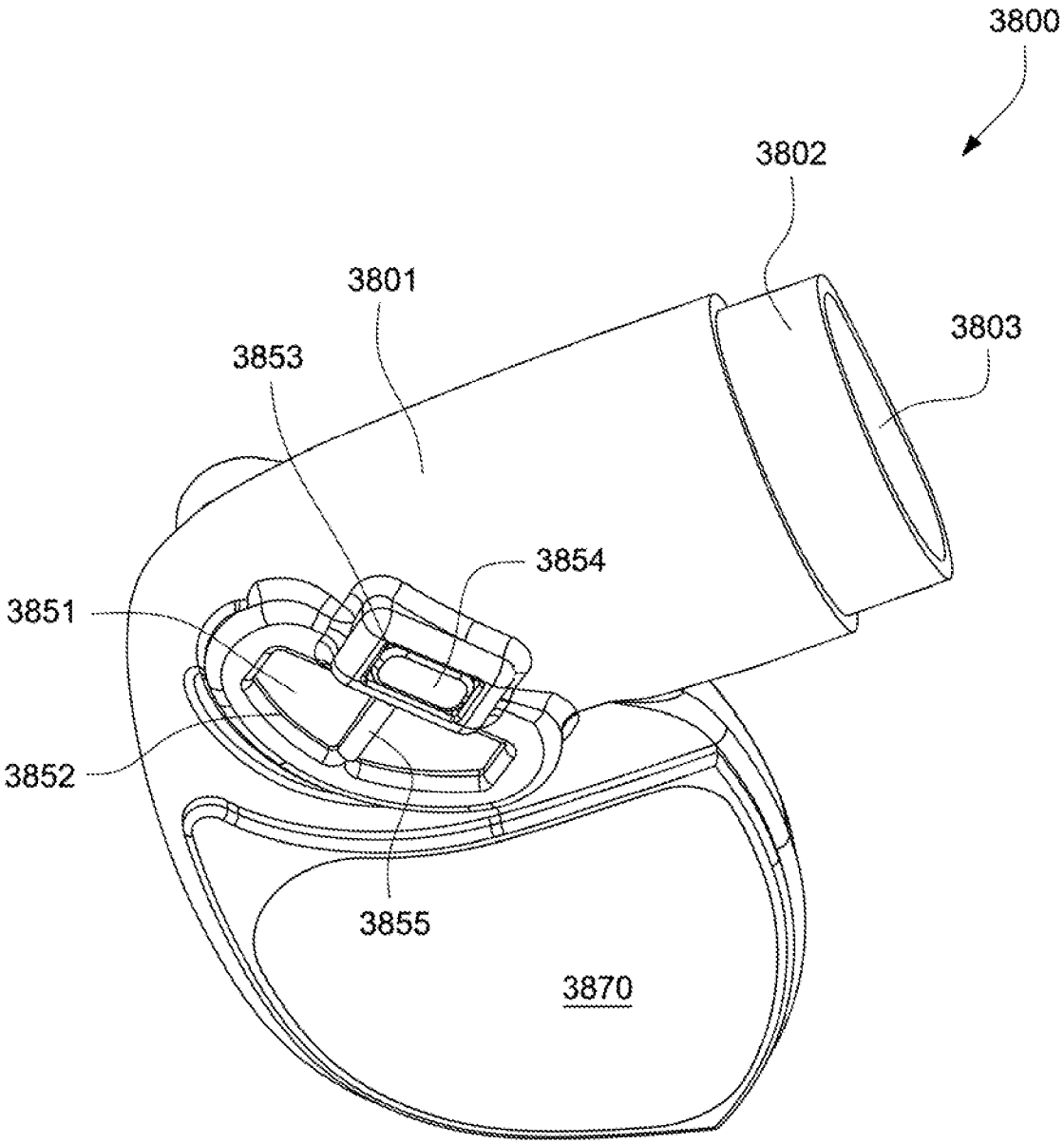

Fig. 27

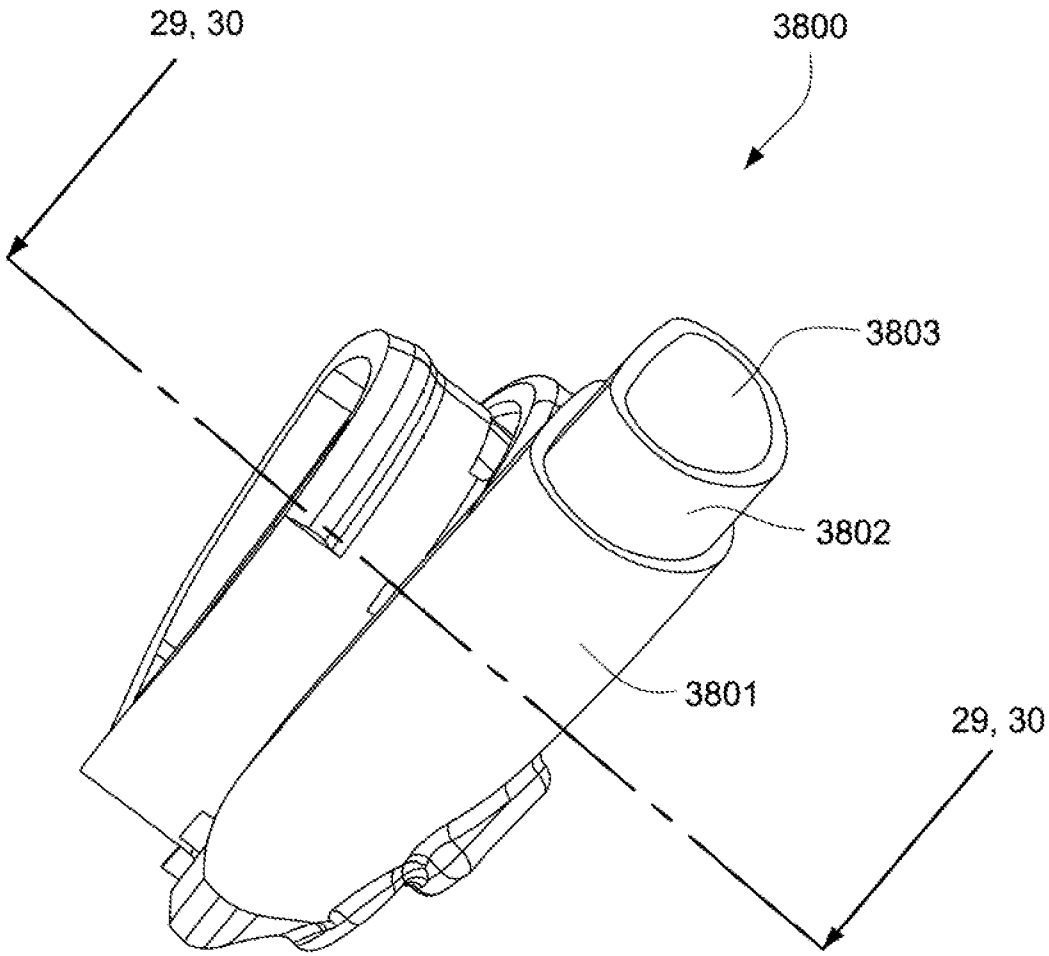

Fig. 28

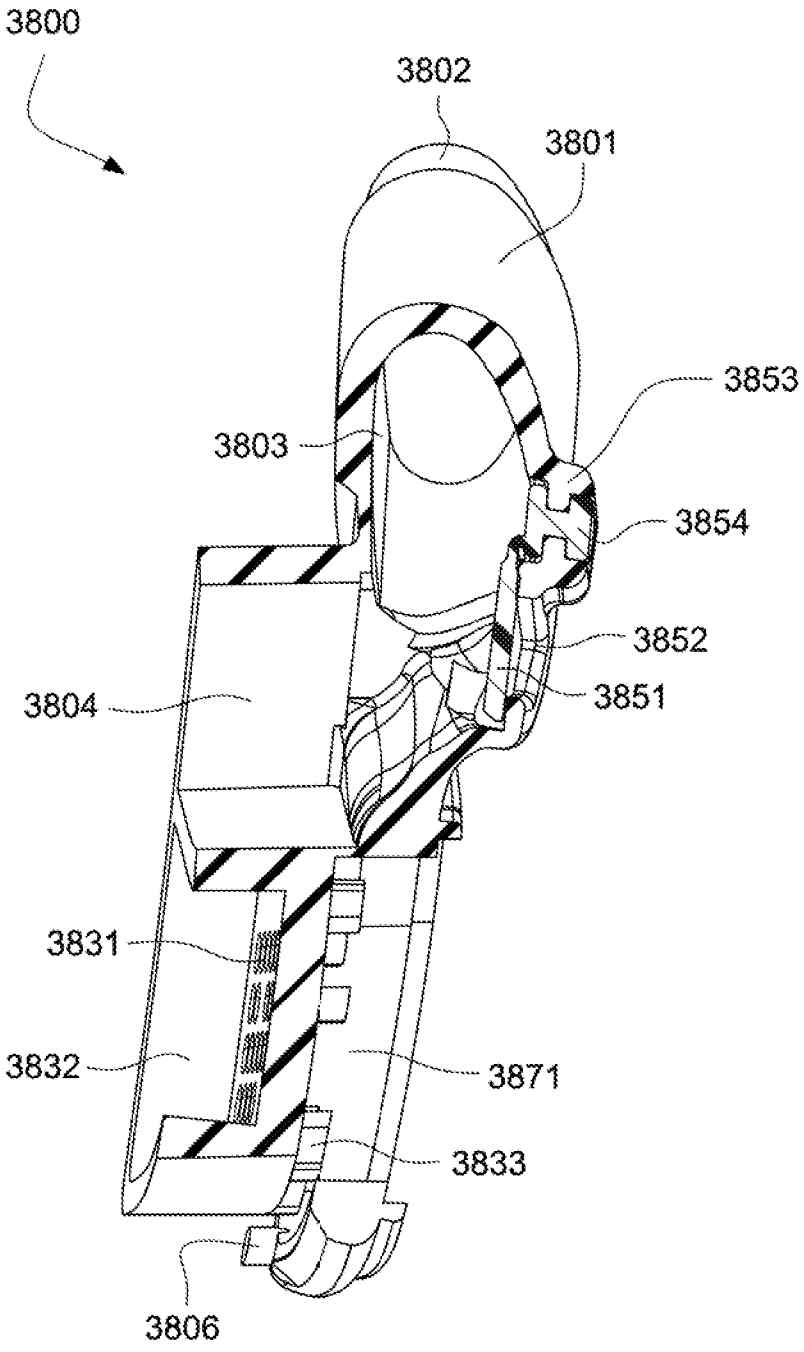
3800
3802
3801
3853
3803
3854
3852
3804
3851
3831
3832
3871
3833
3806

Fig. 29

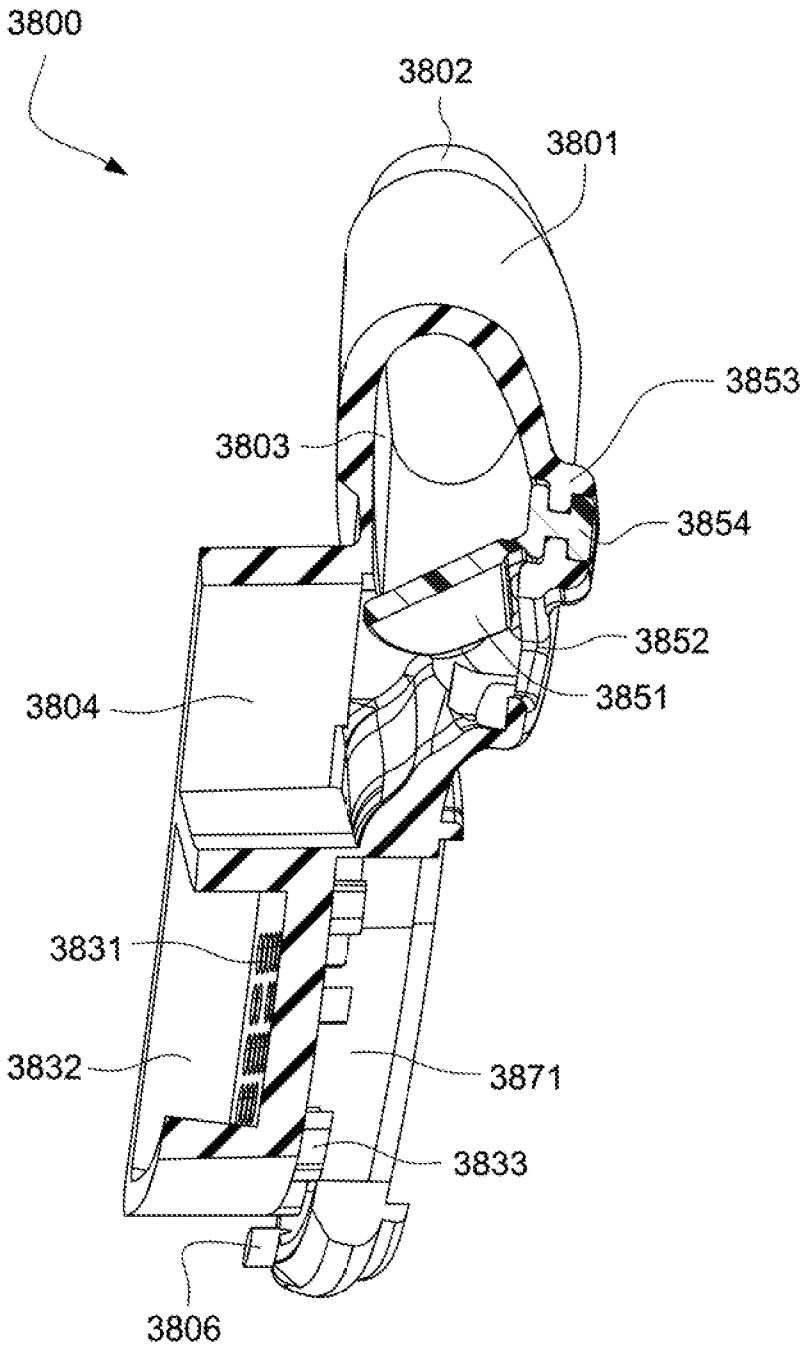
3800
3802
3801
3853
3803
3854
3852
3851
3804
3831
3832
3871
3833
3806

Fig. 30

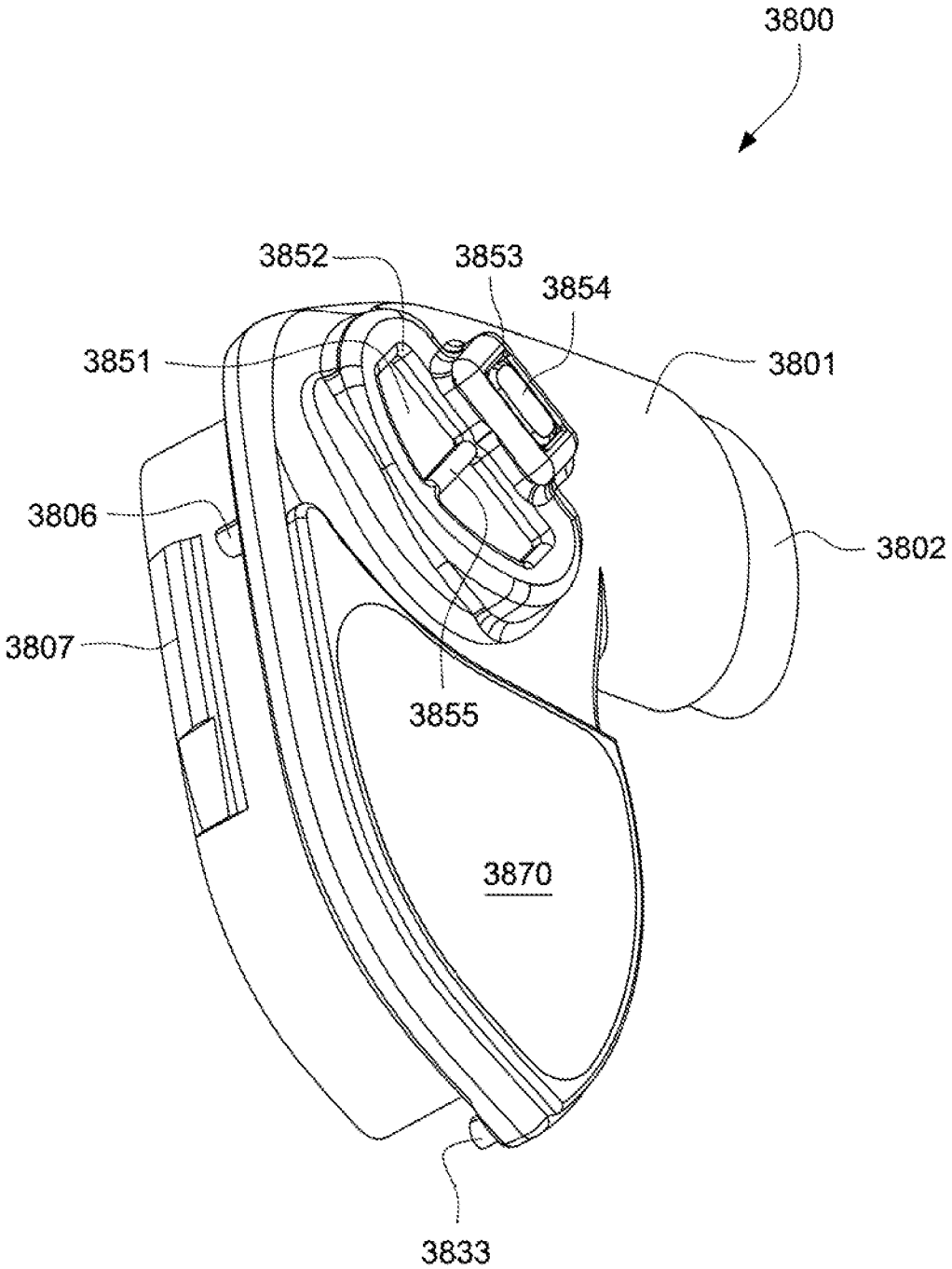

Fig. 31

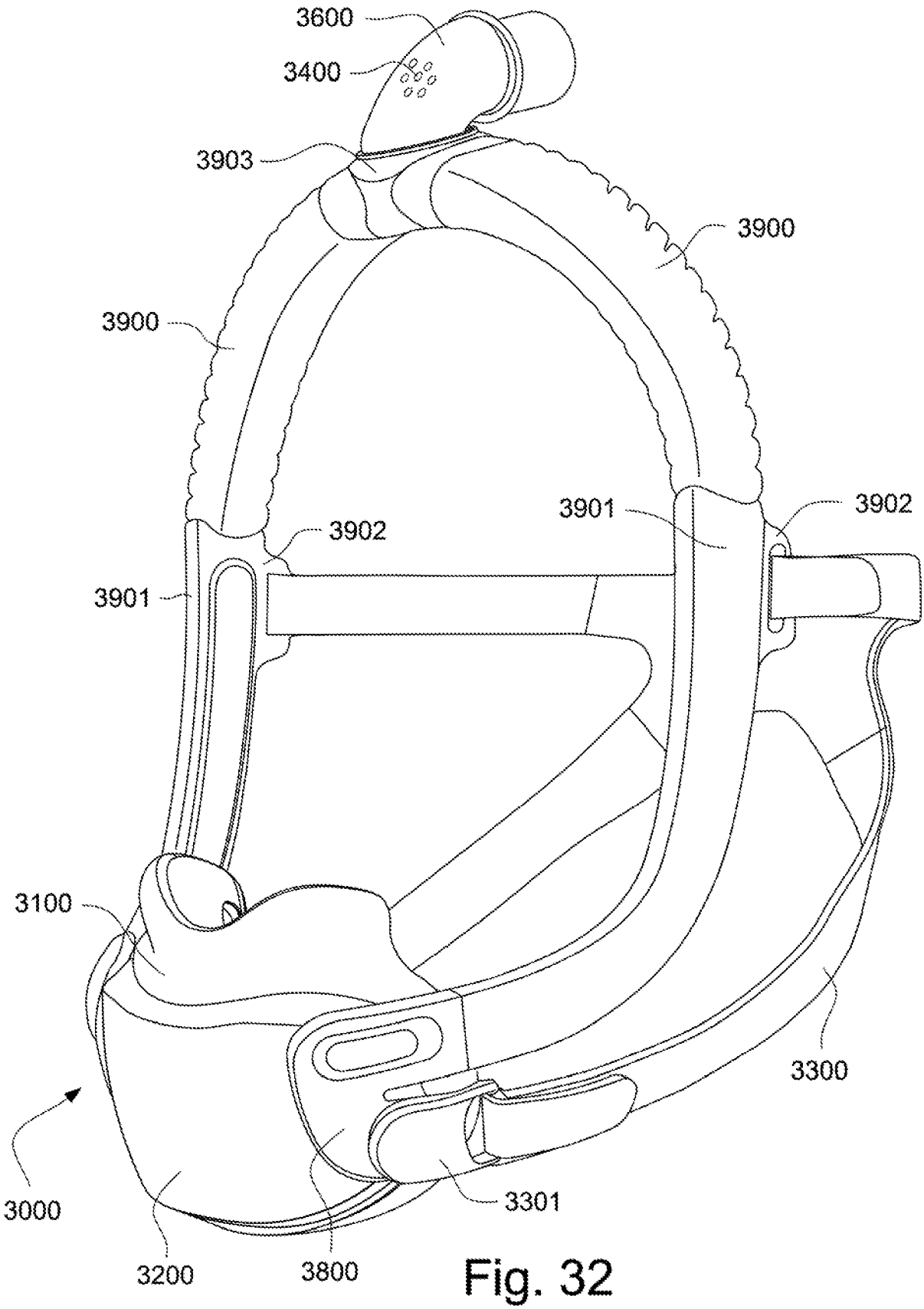
3600
3400
3903
3900
3900
3901
3902
3902
3901
3100
3300
3000
3301
3200
3800

Fig. 32

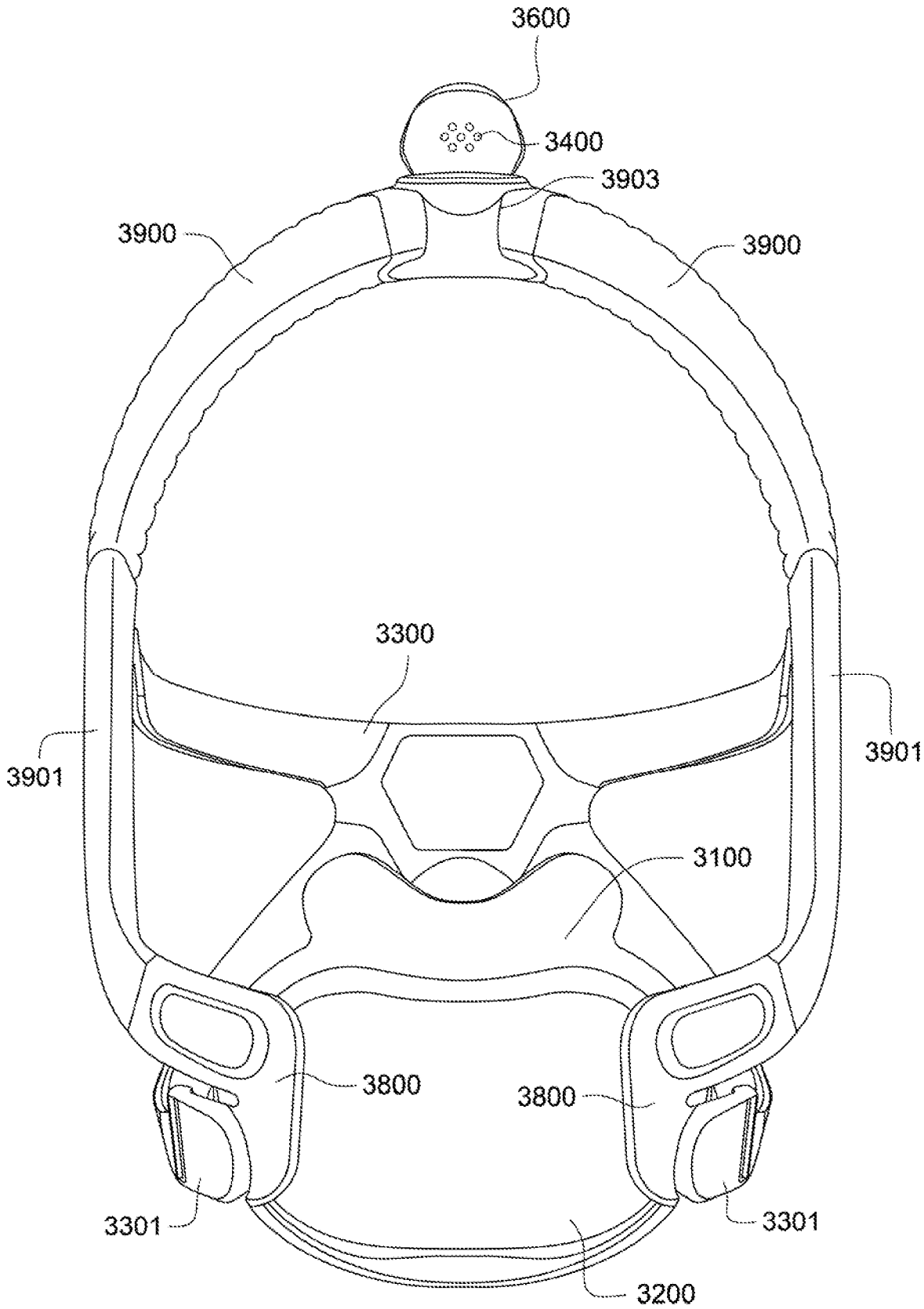
3600
3400
3903
3900
3900
3300
3901
3901
3100
3800
3800
3301
3301
3200

Fig. 33

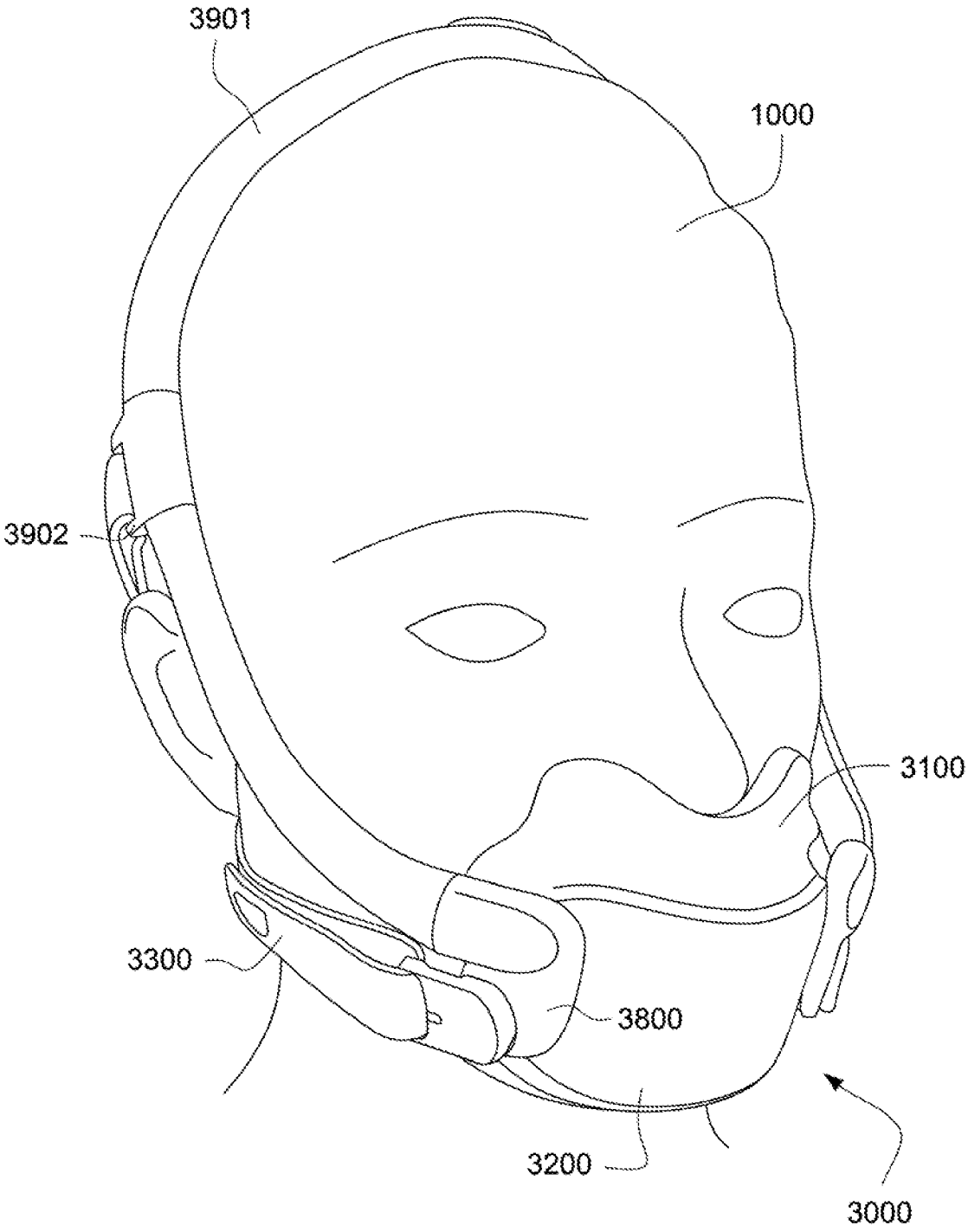

Fig. 34

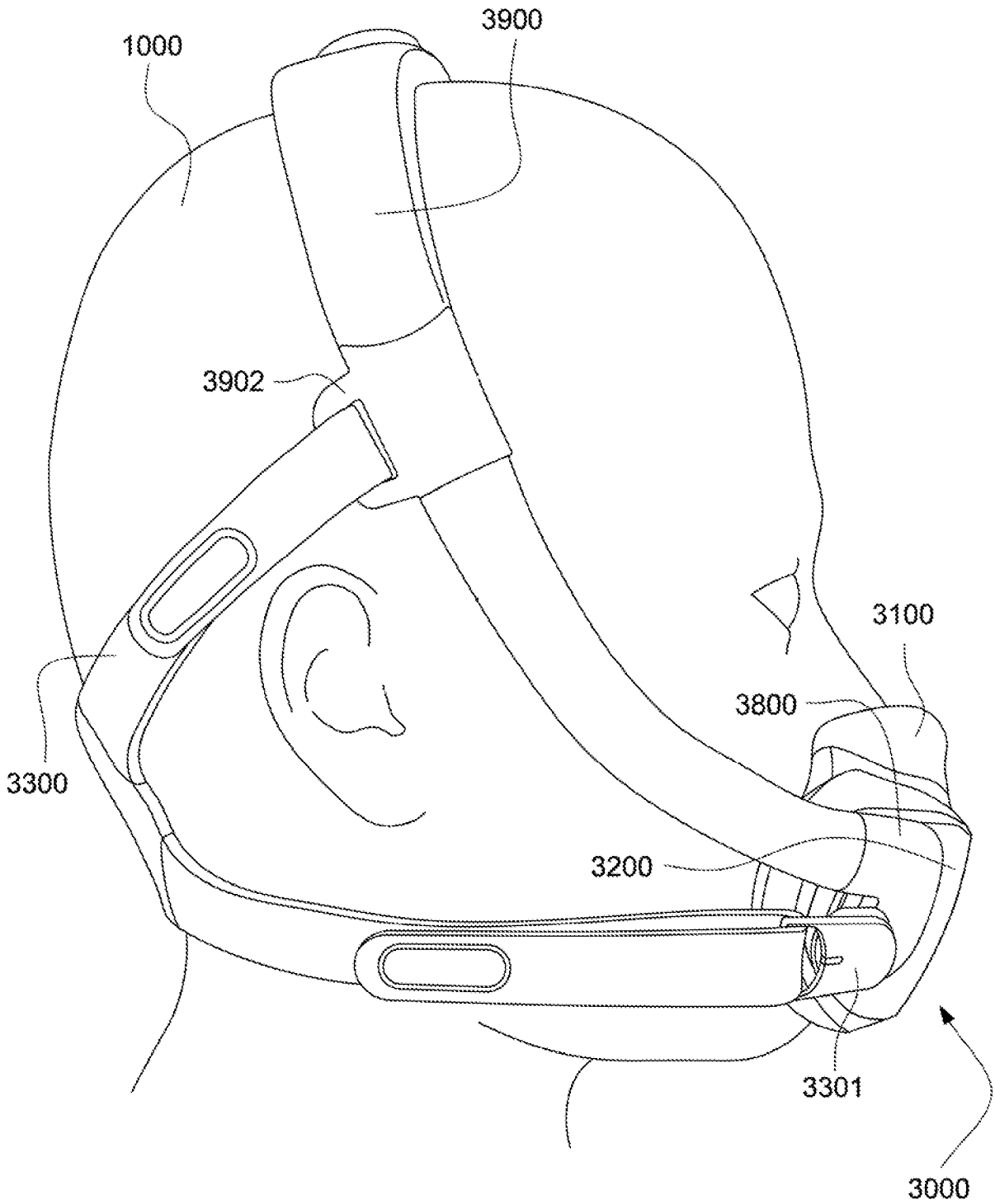

Fig. 35

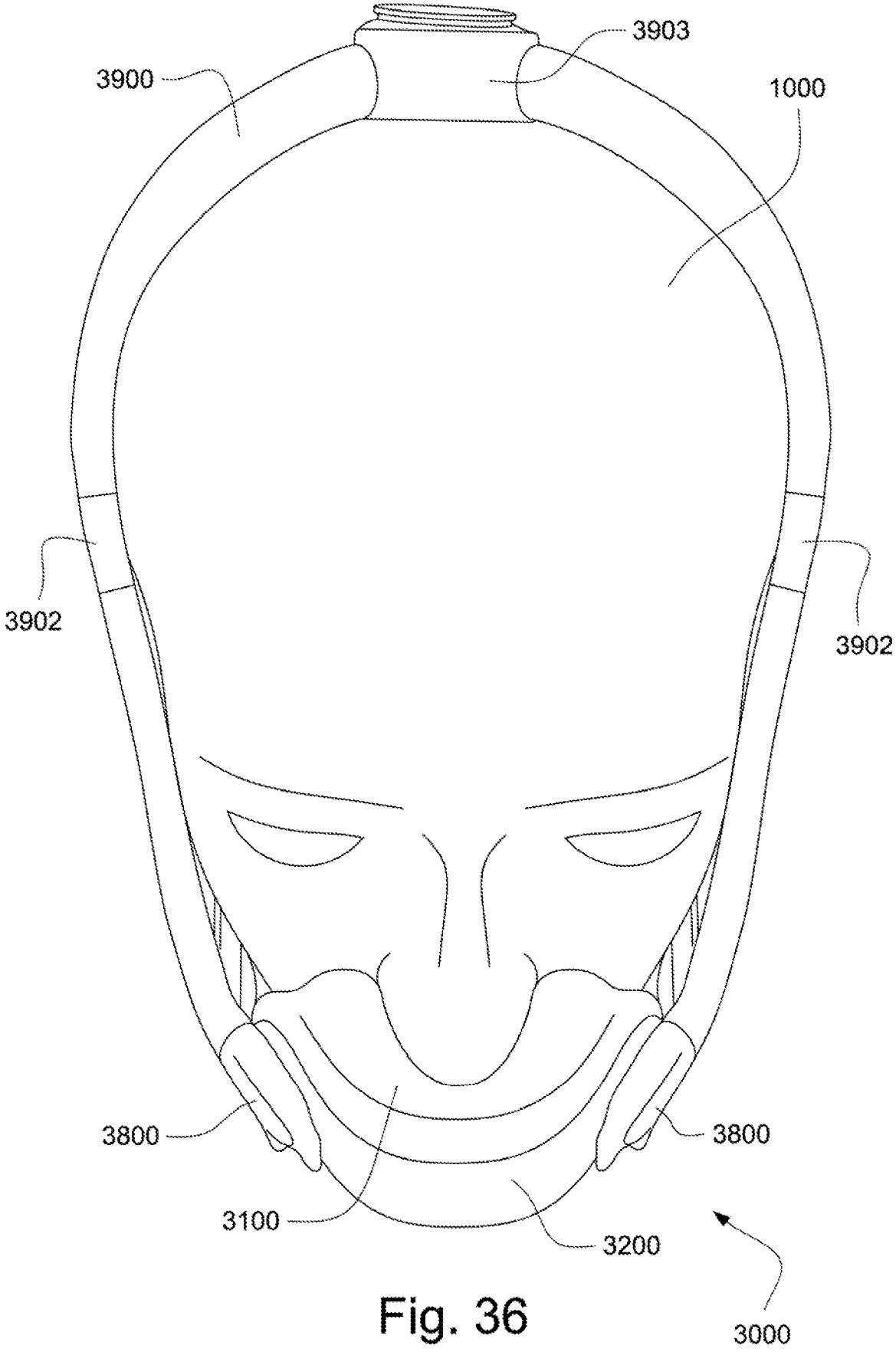

Fig. 36

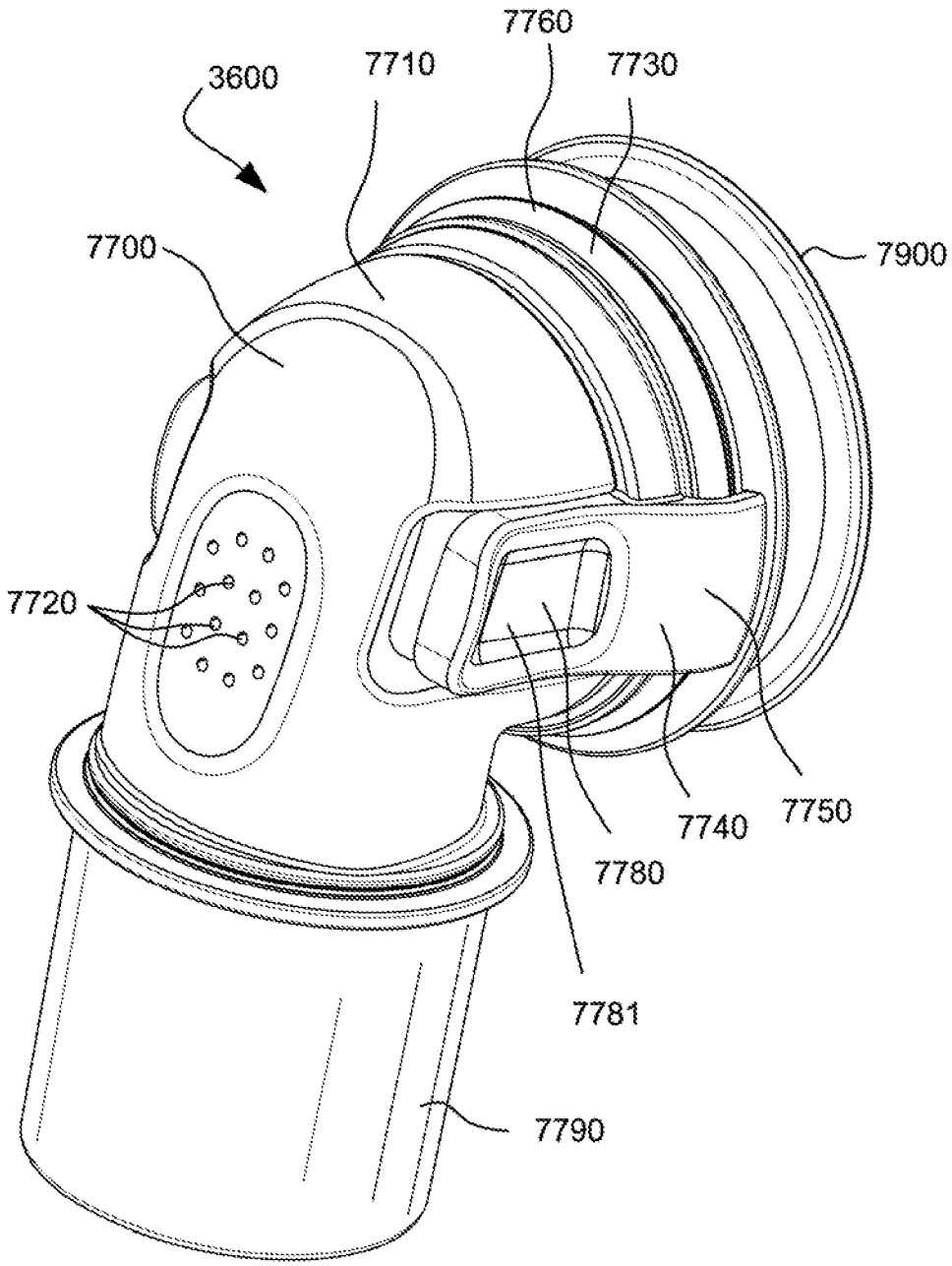

FIG. 37

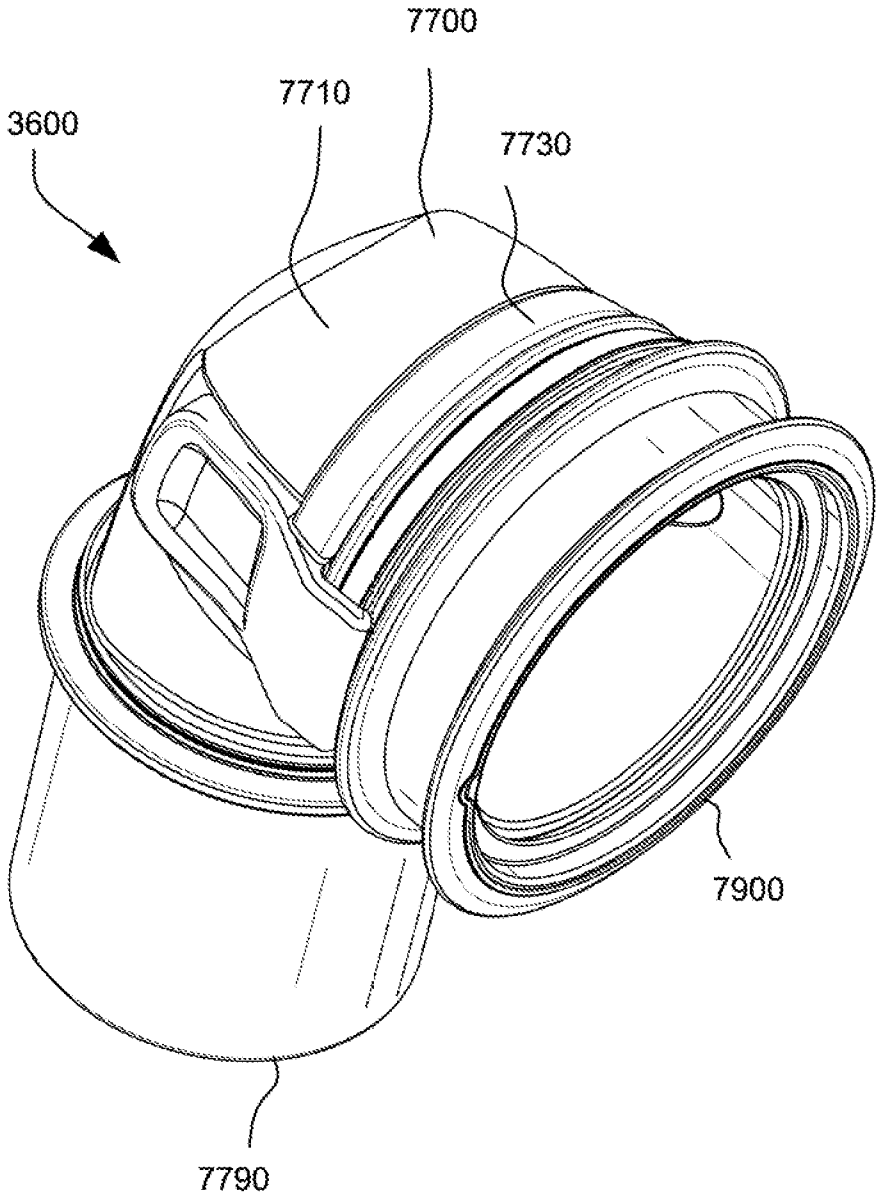

FIG. 38

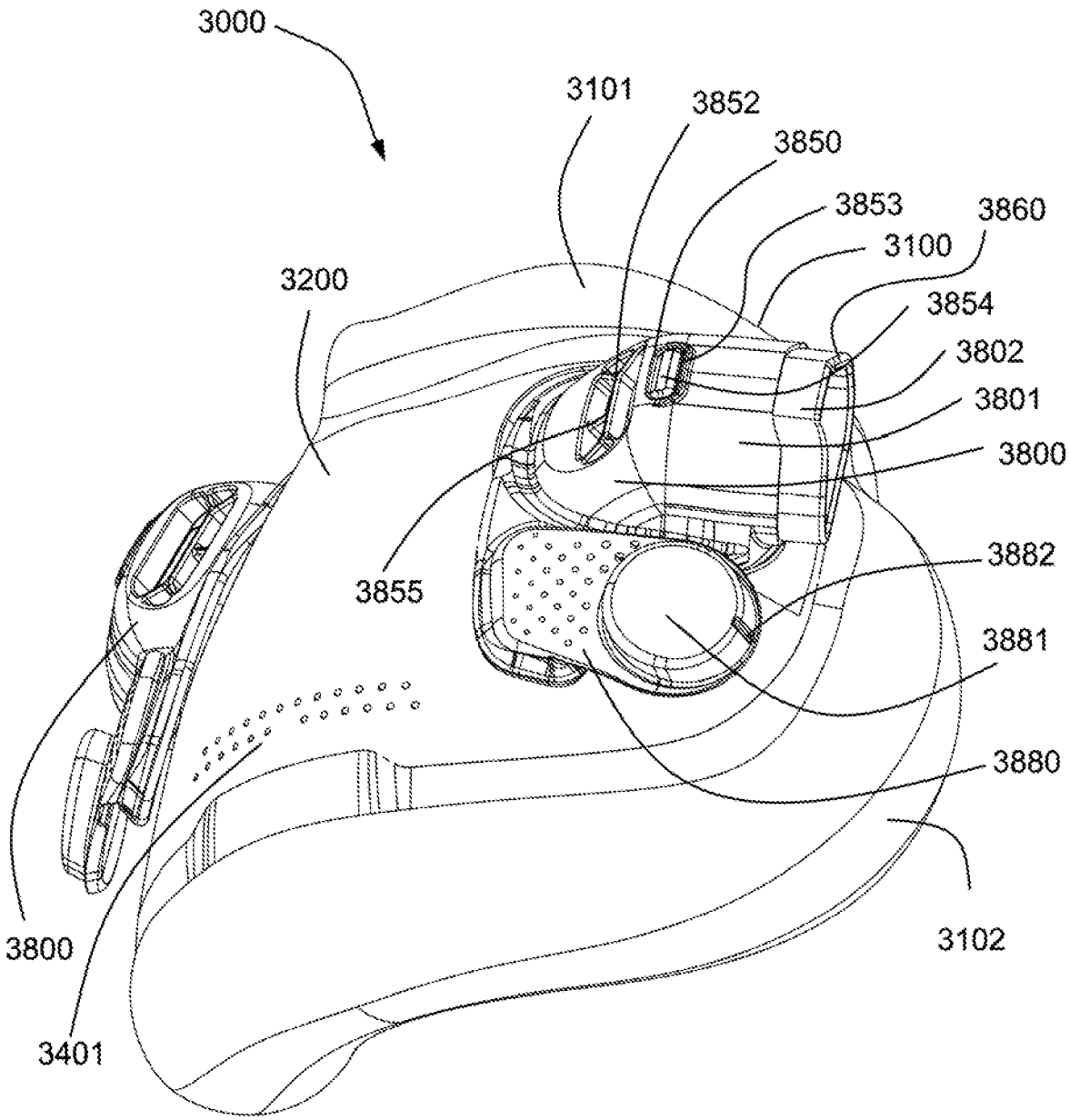
3000
3101
3852
3850
3853
3860
3100
3200
3854
3802
3801
3800
3855
3882
3881
3880
3800
3102
3401

FIG. 39

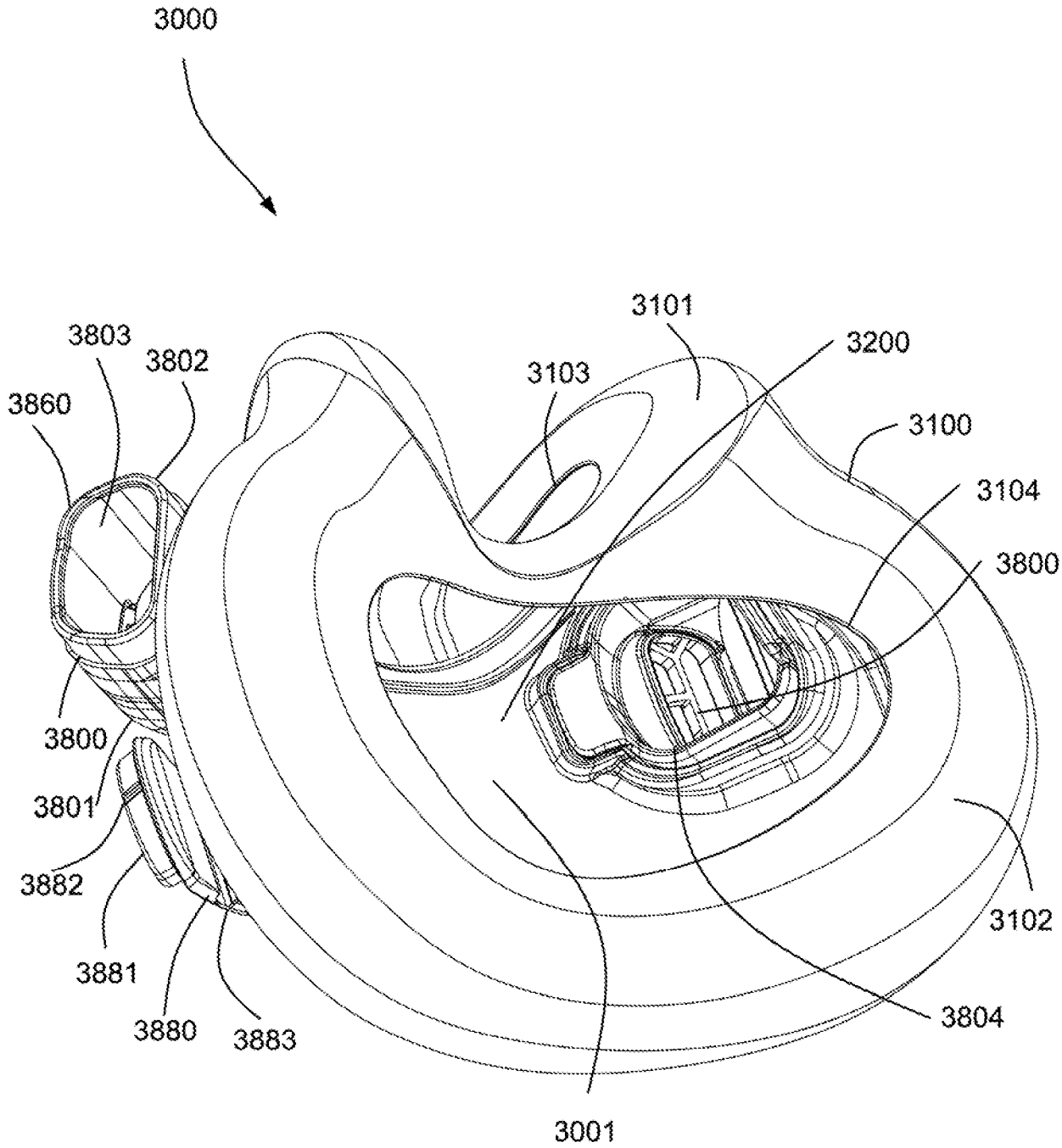
3000
3101
3803
3802
3200
3103
3860
3100
3104
3800
3800
3801
3882
3102
3881
3804
3880
3883
3001

FIG. 40

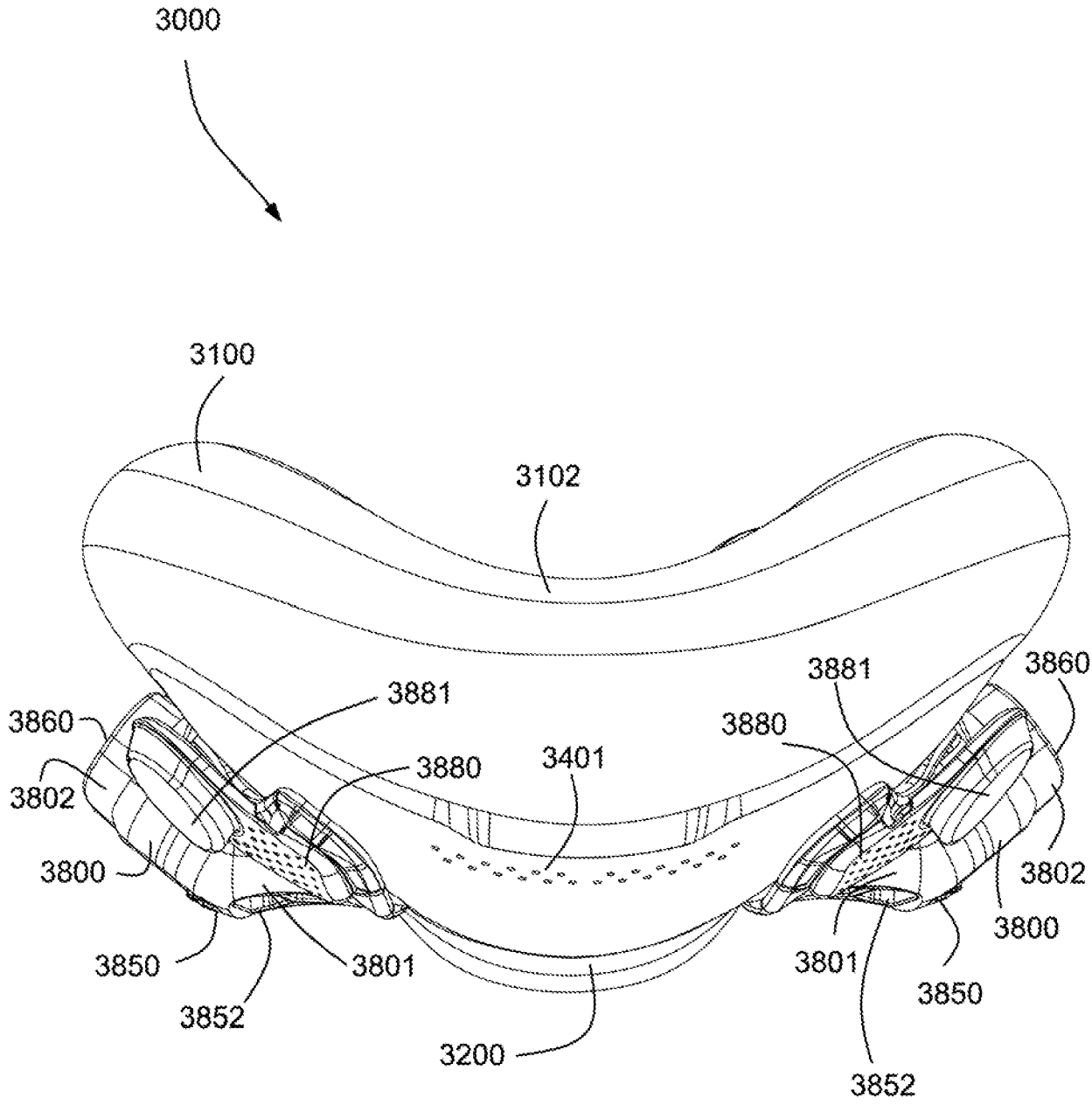
3000
3100
3102
3881
3860
3802
3880
3401
3800
3850
3801
3852
3200
3881
3860
3880
3802
3800
3801
3850
3852

FIG. 41

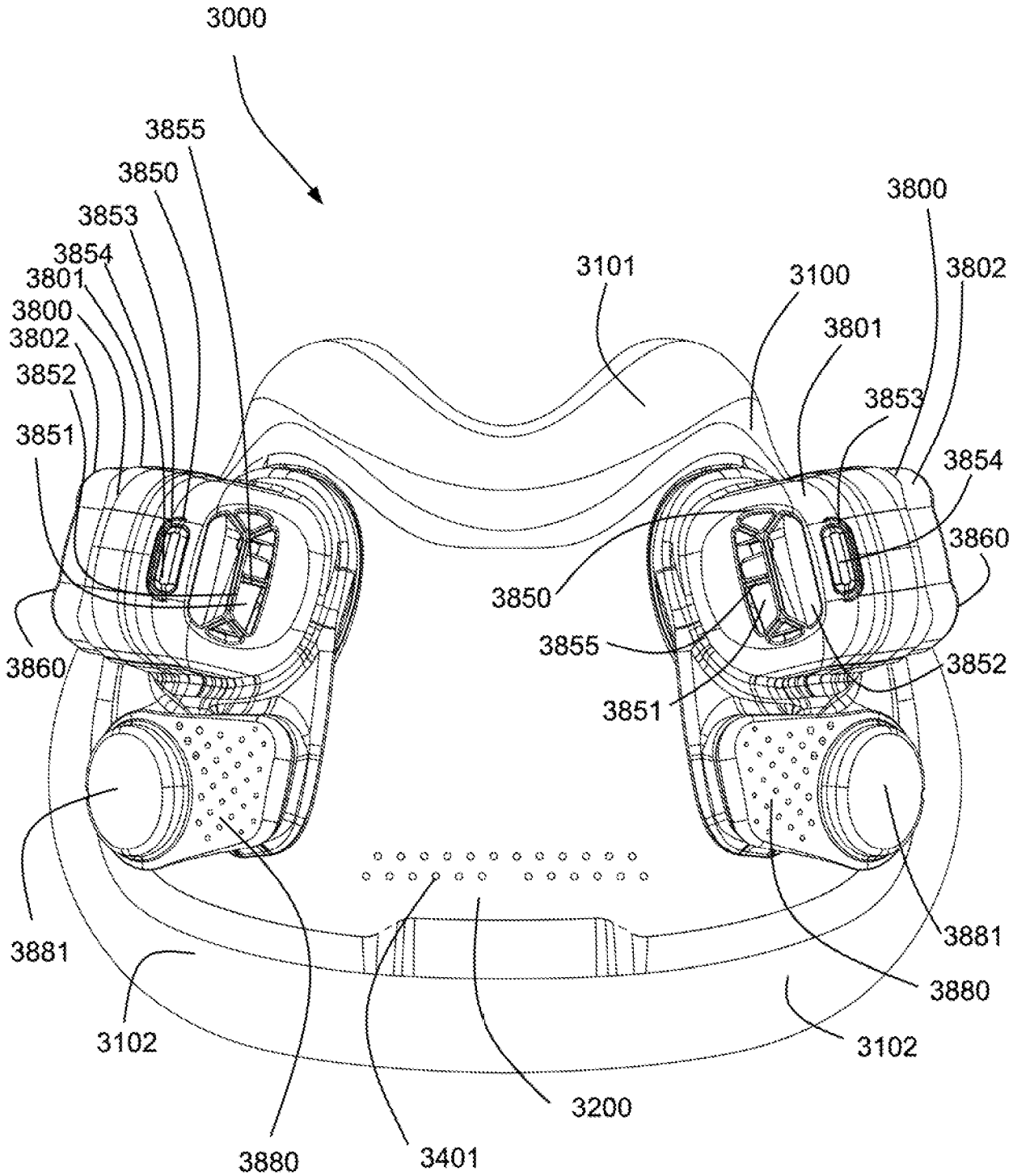
3000
3855
3850
3853
3854
3801
3800
3802
3852
3851
3860
3881
3102
3880
3401
3200
3101
3100
3801
3800
3802
3853
3854
3860
3850
3855
3852
3851
3881
3880
3102

FIG. 42

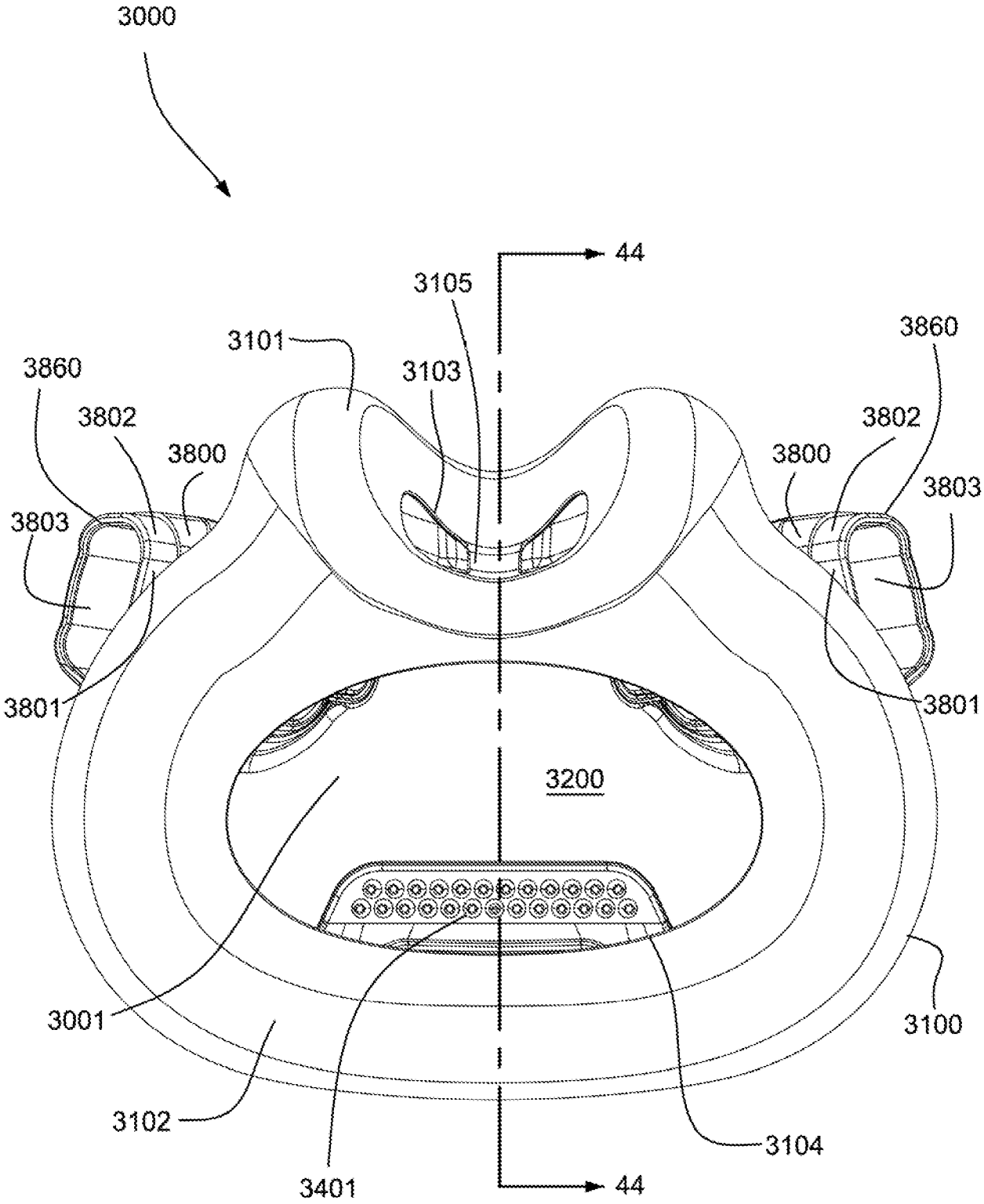
3000
44
3105
3101
3103
3860
3802
3800
3803
3801
3200
3001
3102
3401
3104
3100
44

FIG. 43

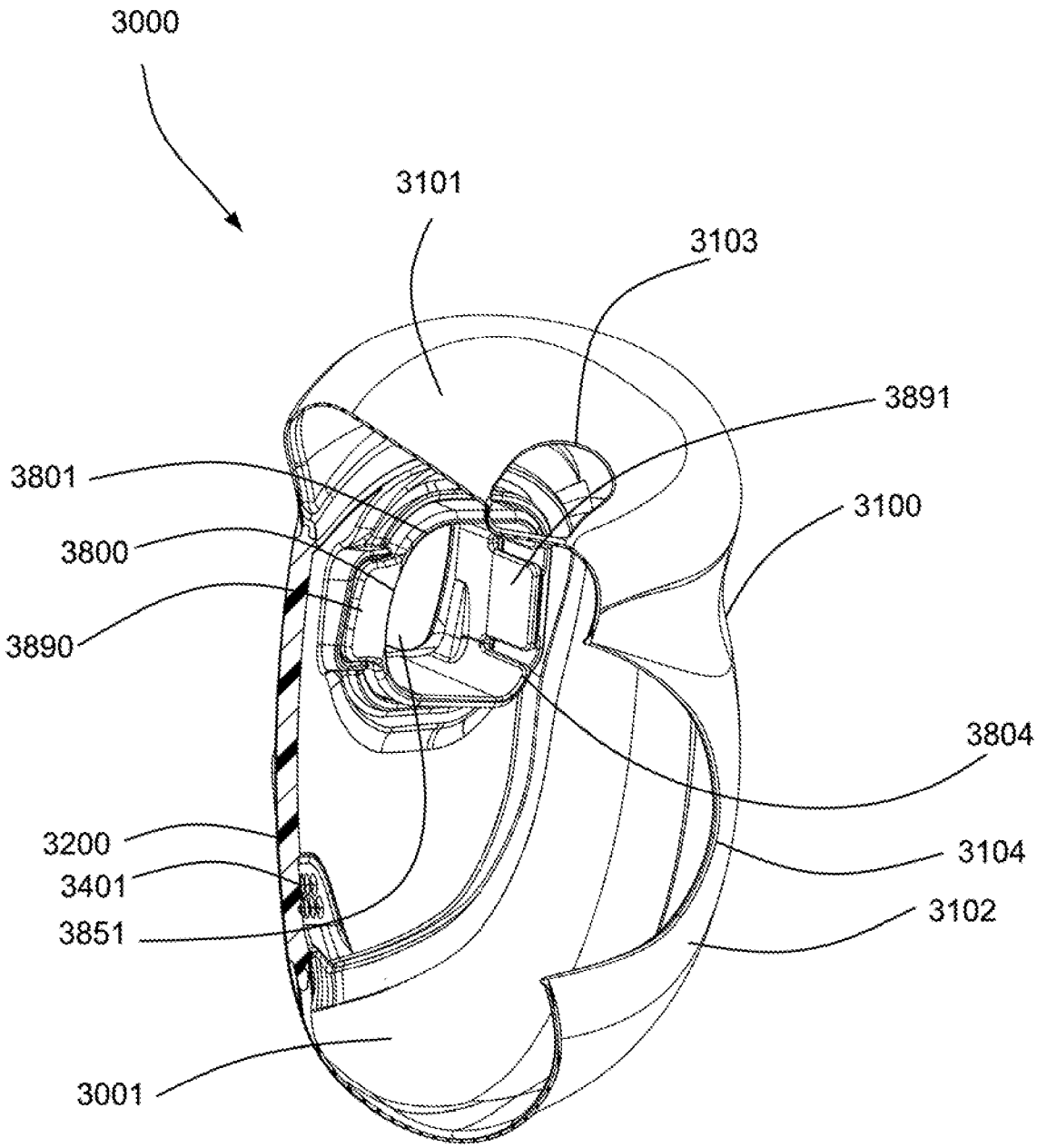
3000
3101
3103
3891
3801
3100
3800
3890
3804
3200
3104
3401
3102
3851
3001

FIG. 44

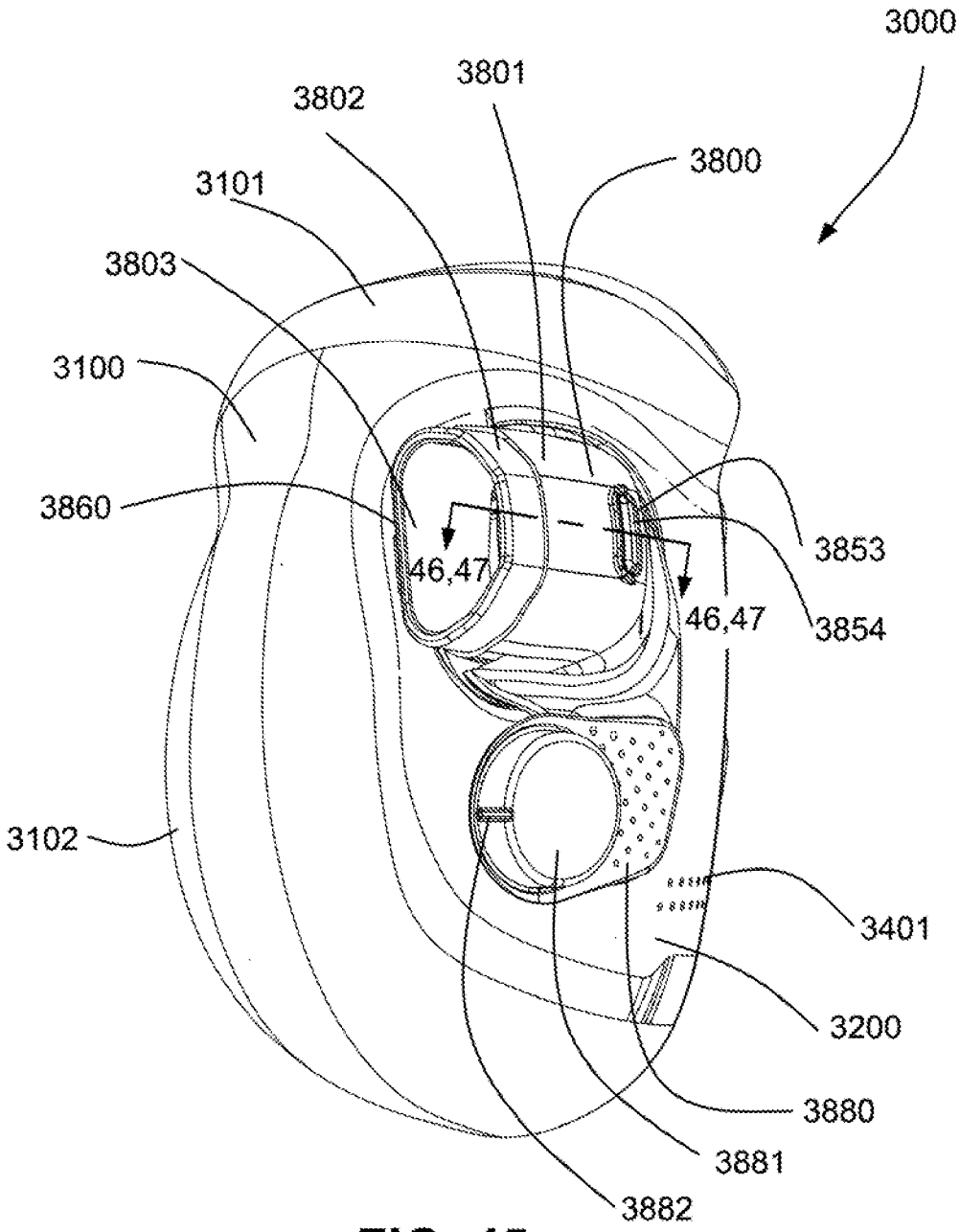
3000
3801
3802
3800
3101
3803
3100
3860
46,47
3853
46,47
3854
3102
3401
3200
3880
3881
3882

FIG. 45

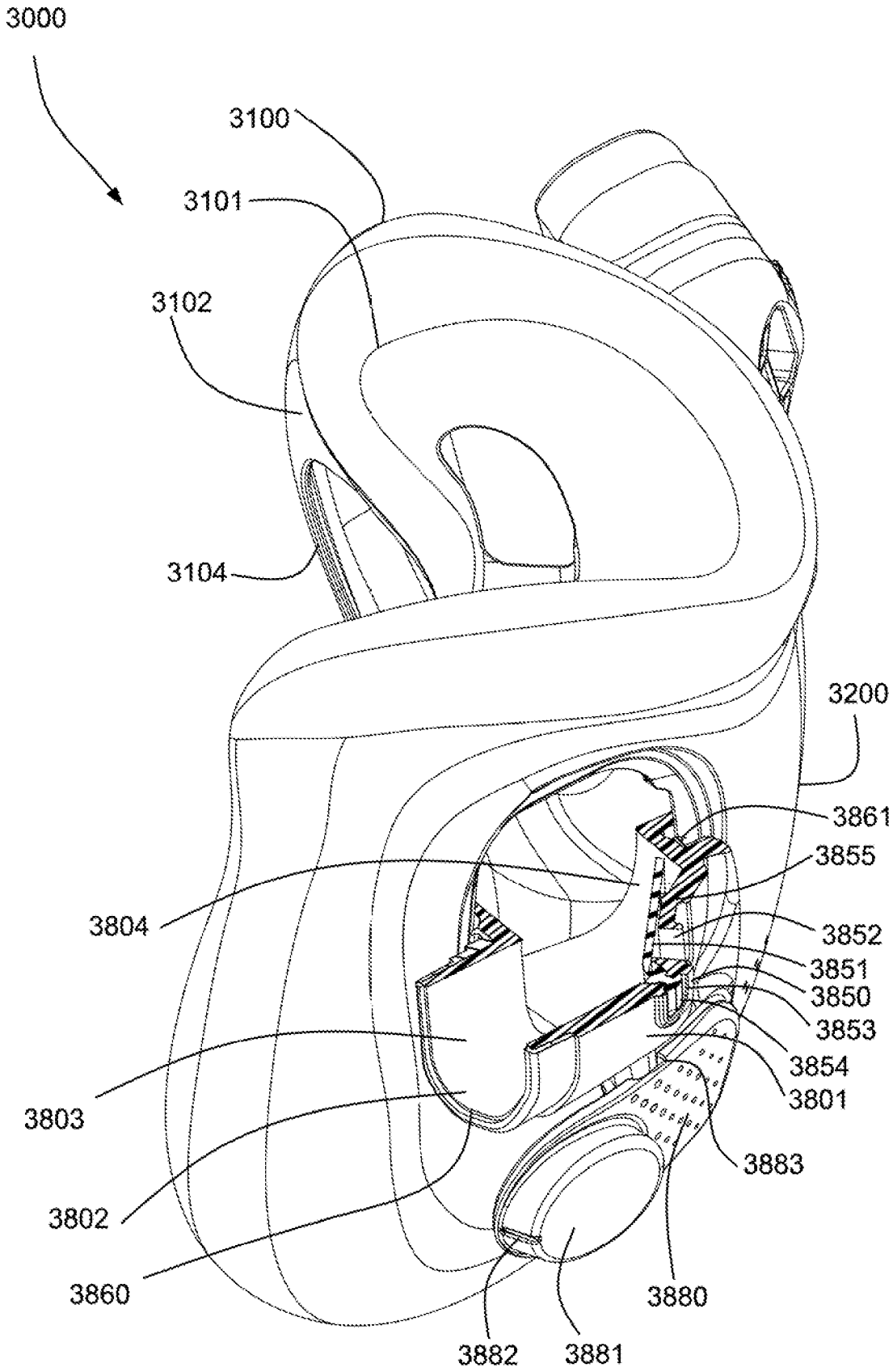
3000
3100
3101
3102
3104
3200
3861
3855
3804
3852
3851
3850
3853
3854
3801
3803
3883
3802
3860
3880
3882
3881

FIG. 46

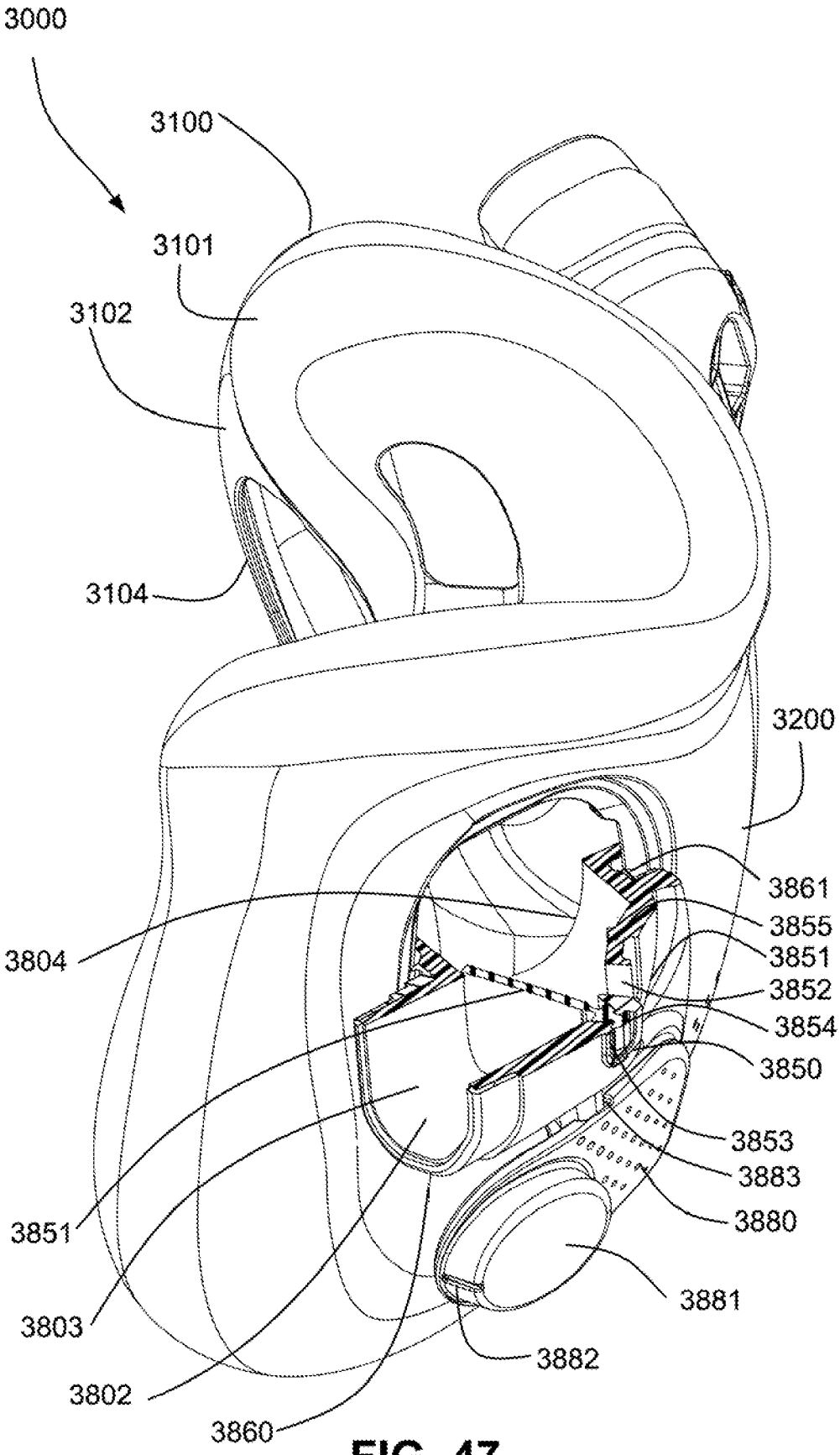
3000
3100
3101
3102
3104
3200
3861
3855
3851
3852
3854
3850
3853
3883
3880
3881
3882
3804
3851
3803
3802
3860

FIG. 47

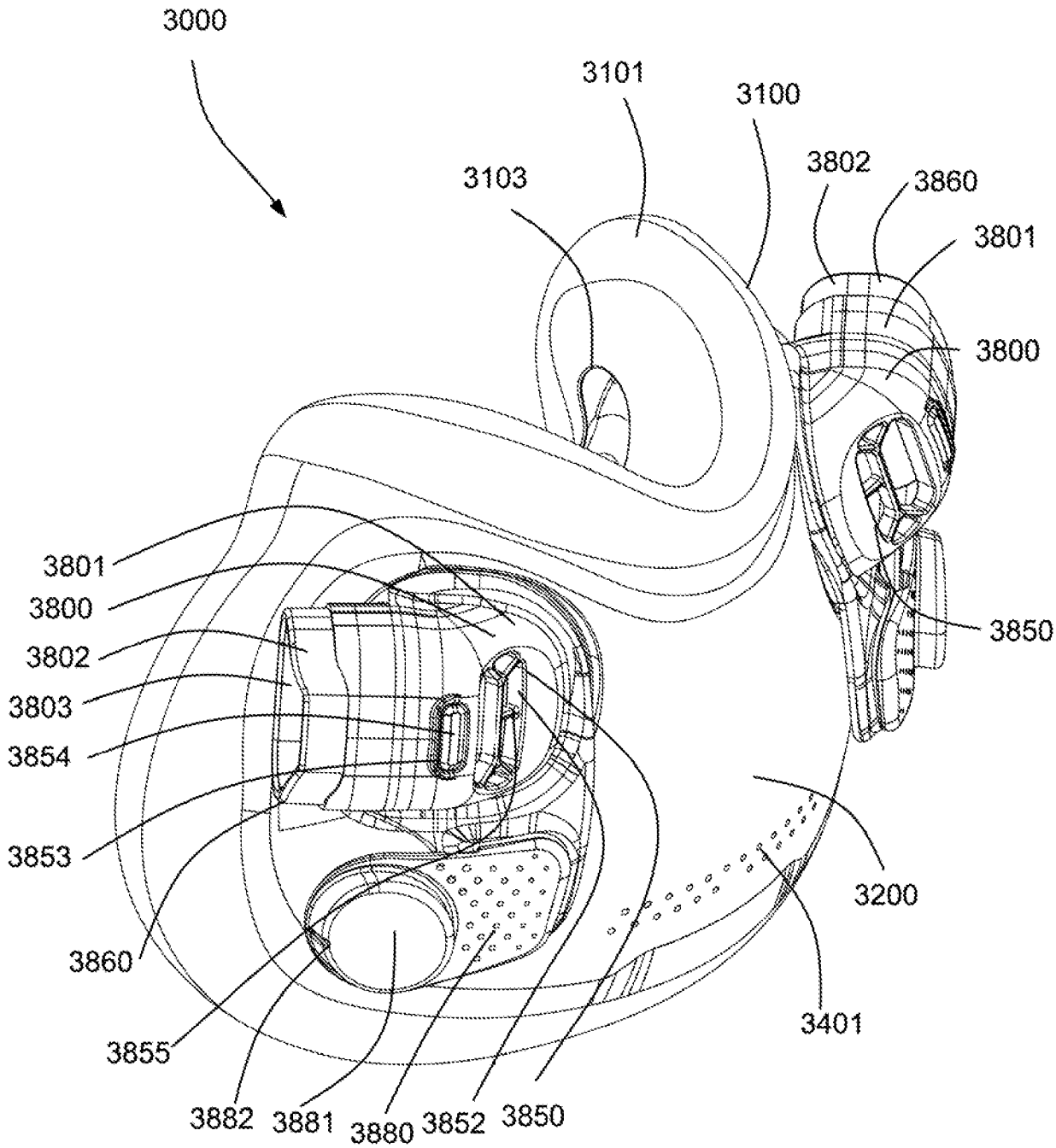
3000
3101
3100
3103
3802
3860
3801
3800
3801
3800
3802
3803
3854
3853
3860
3855
3882
3881
3880
3852
3850
3850
3200
3401

FIG. 48

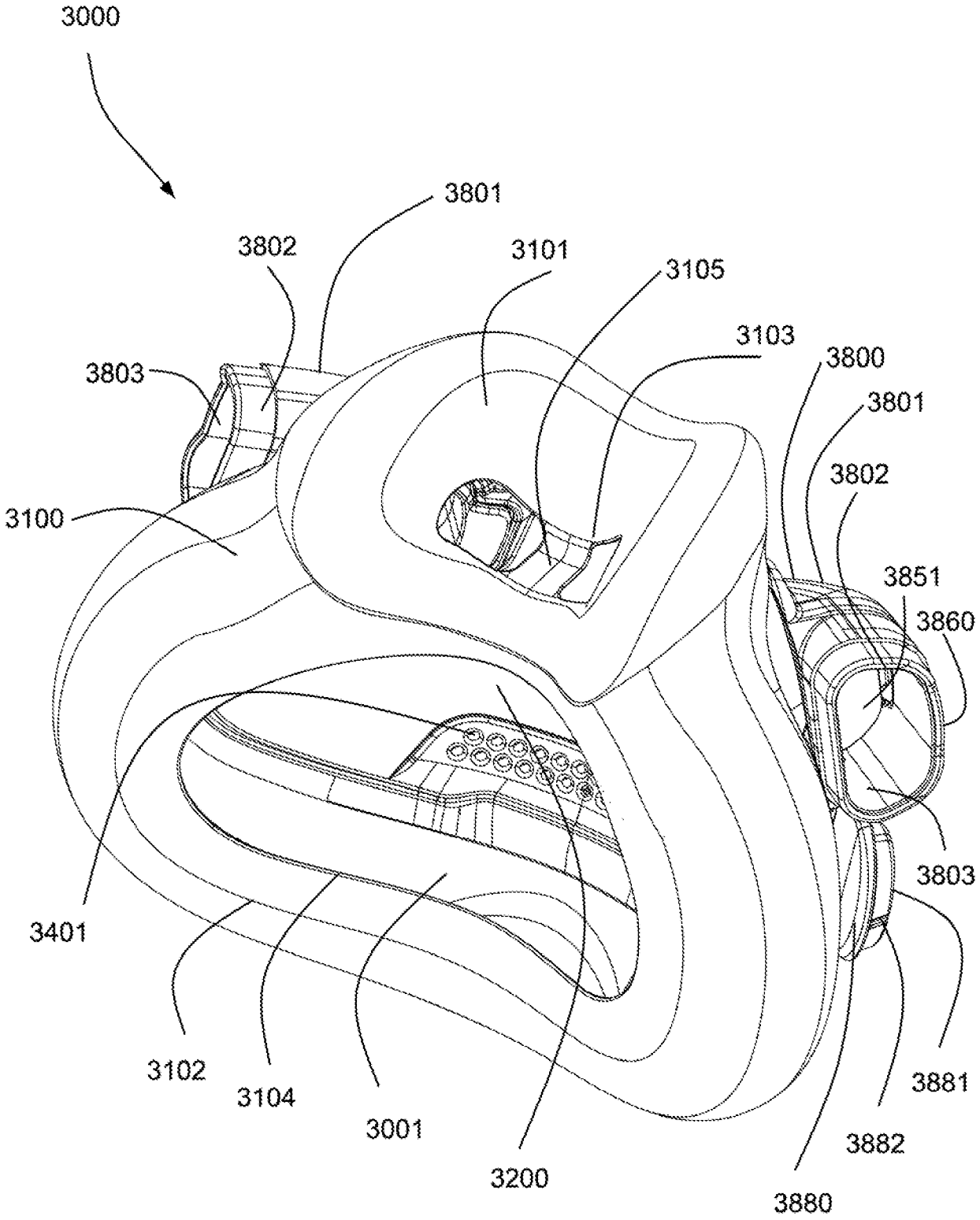
3000
3801
3802
3101
3105
3103
3800
3803
3801
3802
3100
3851
3860
3803
3401
3881
3102
3104
3001
3882
3200
3880

FIG. 49

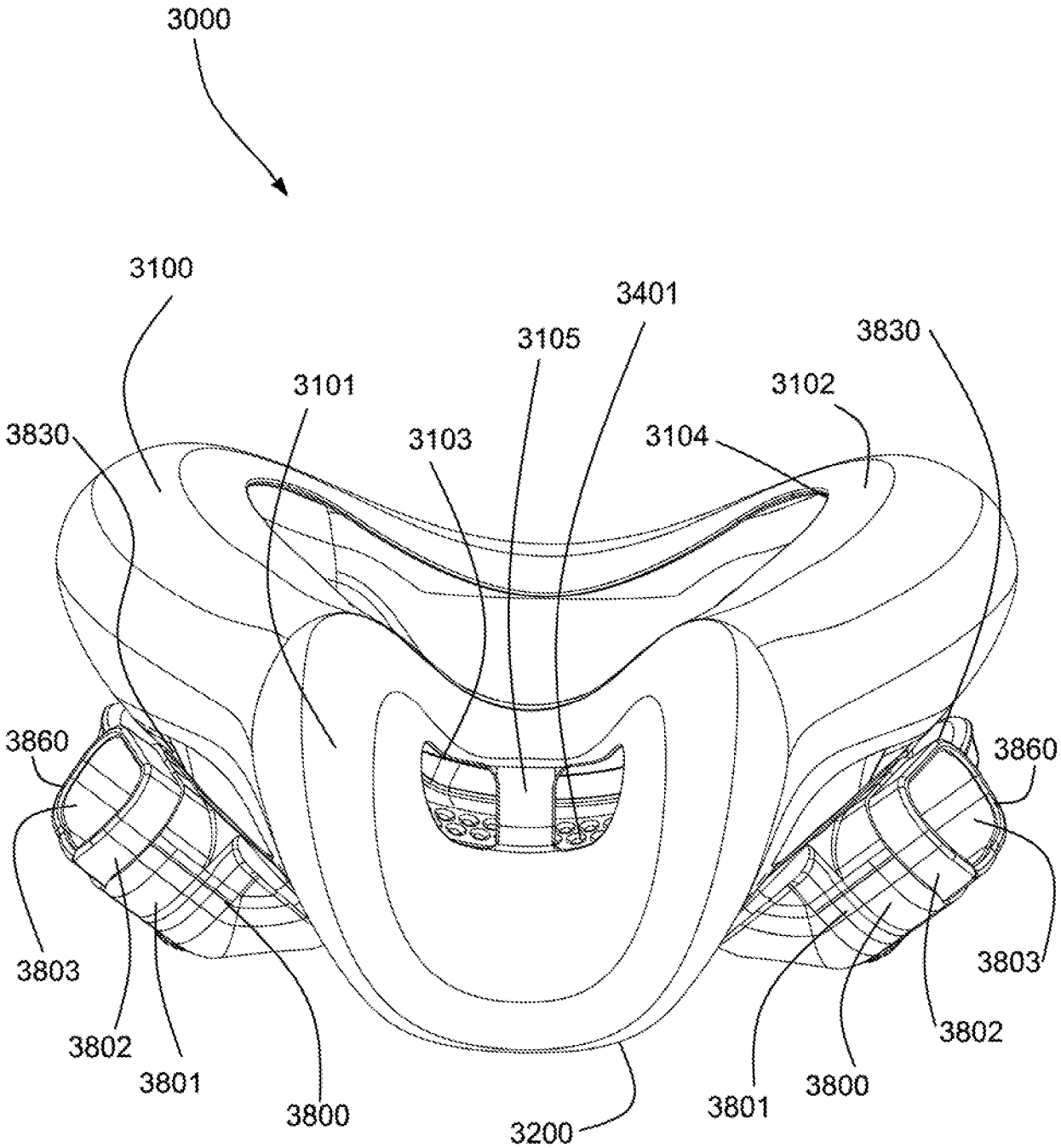
3000
3100
3401
3105
3830
3101
3102
3830
3103
3104
3860
3860
3803
3803
3802
3802
3801
3801
3800
3800
3200

FIG. 50

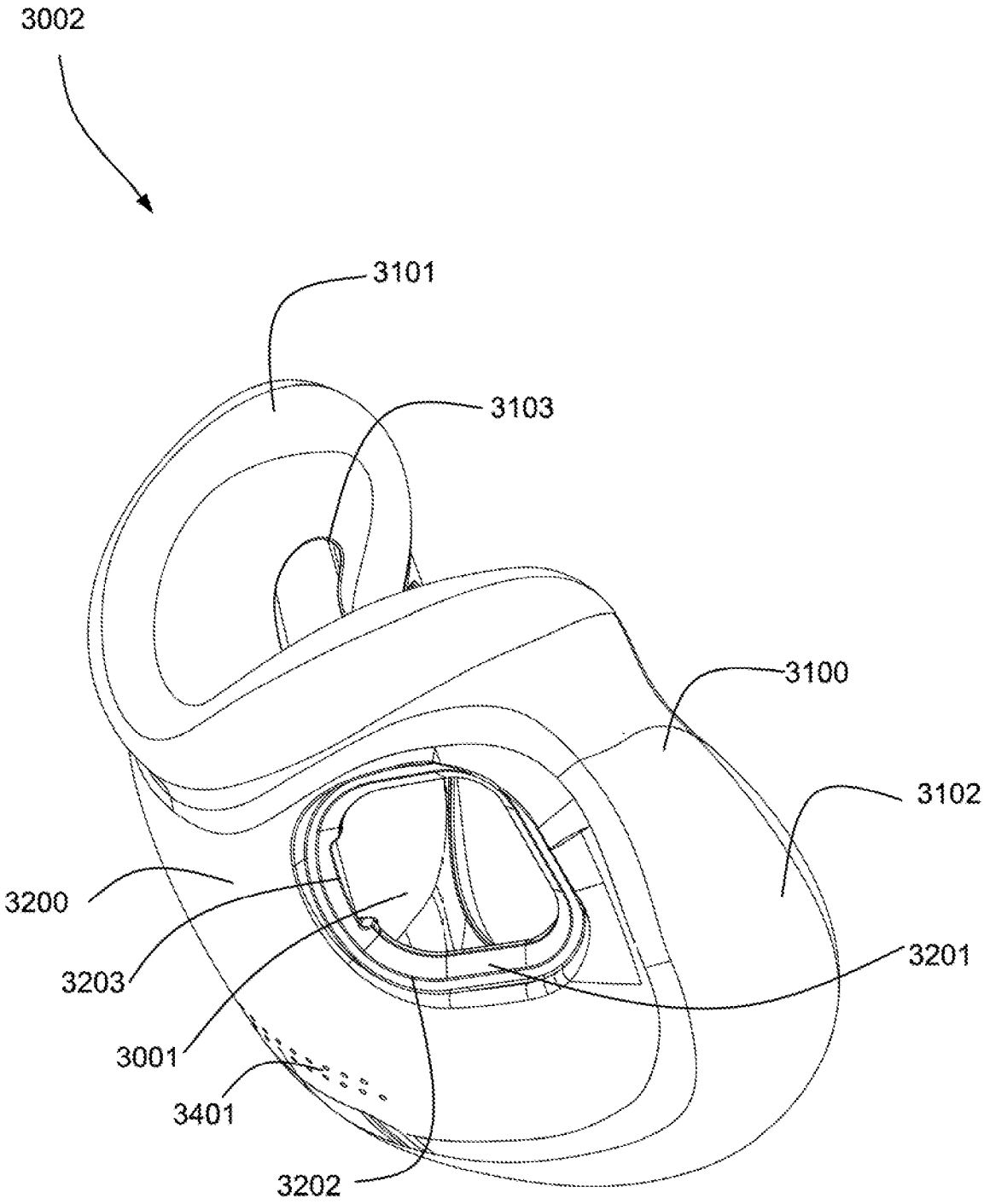

FIG. 51

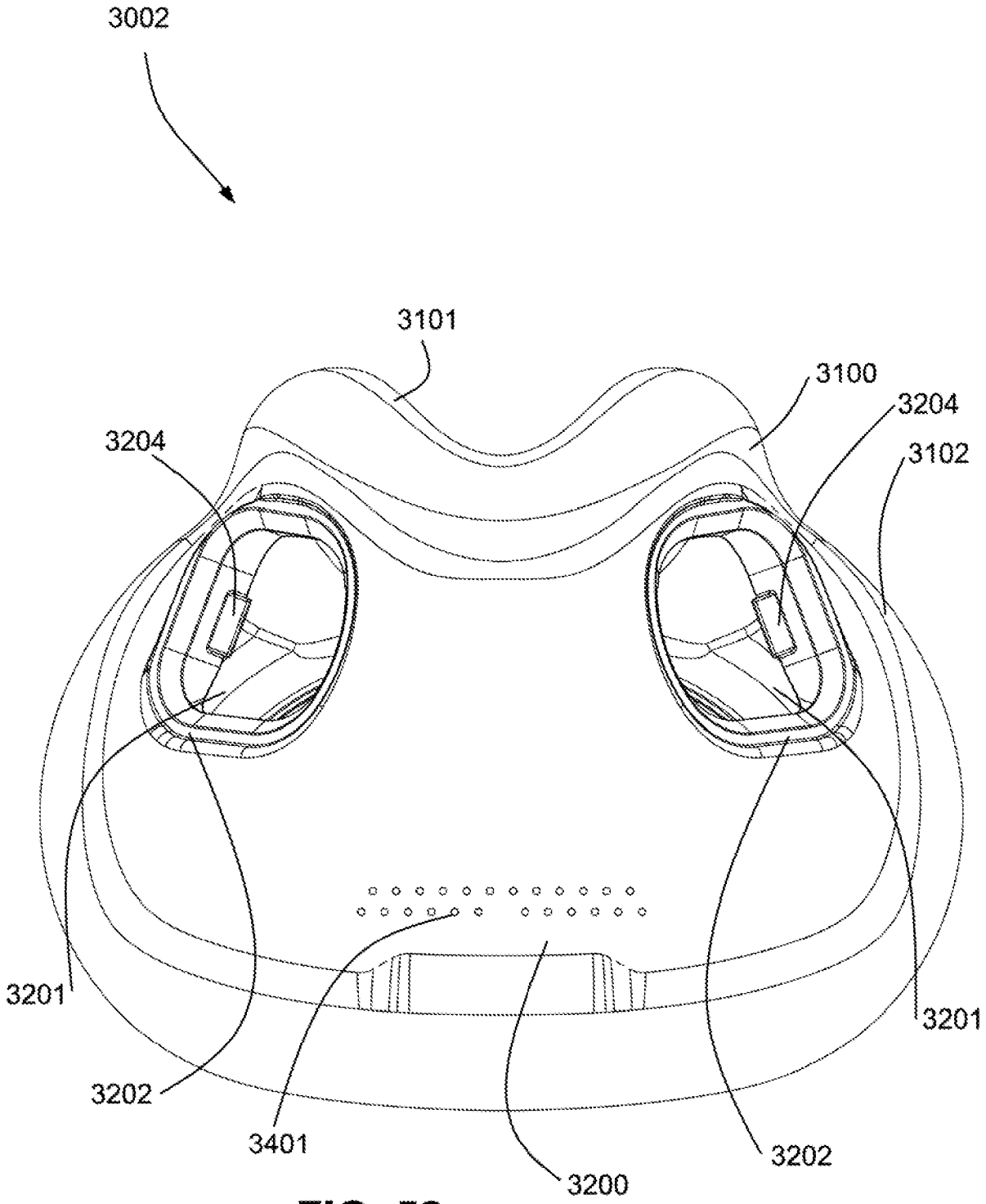

FIG. 52

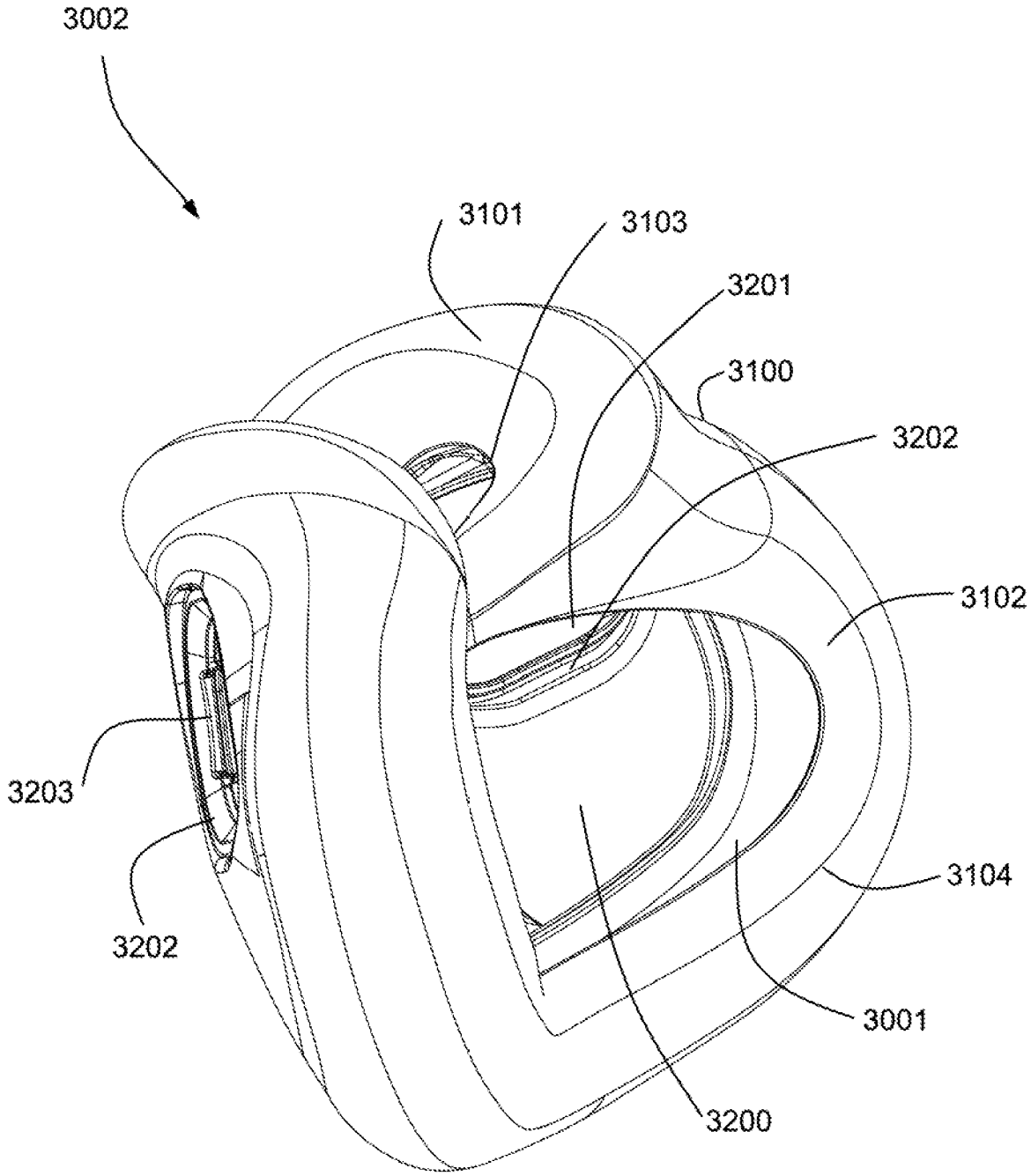

FIG. 53

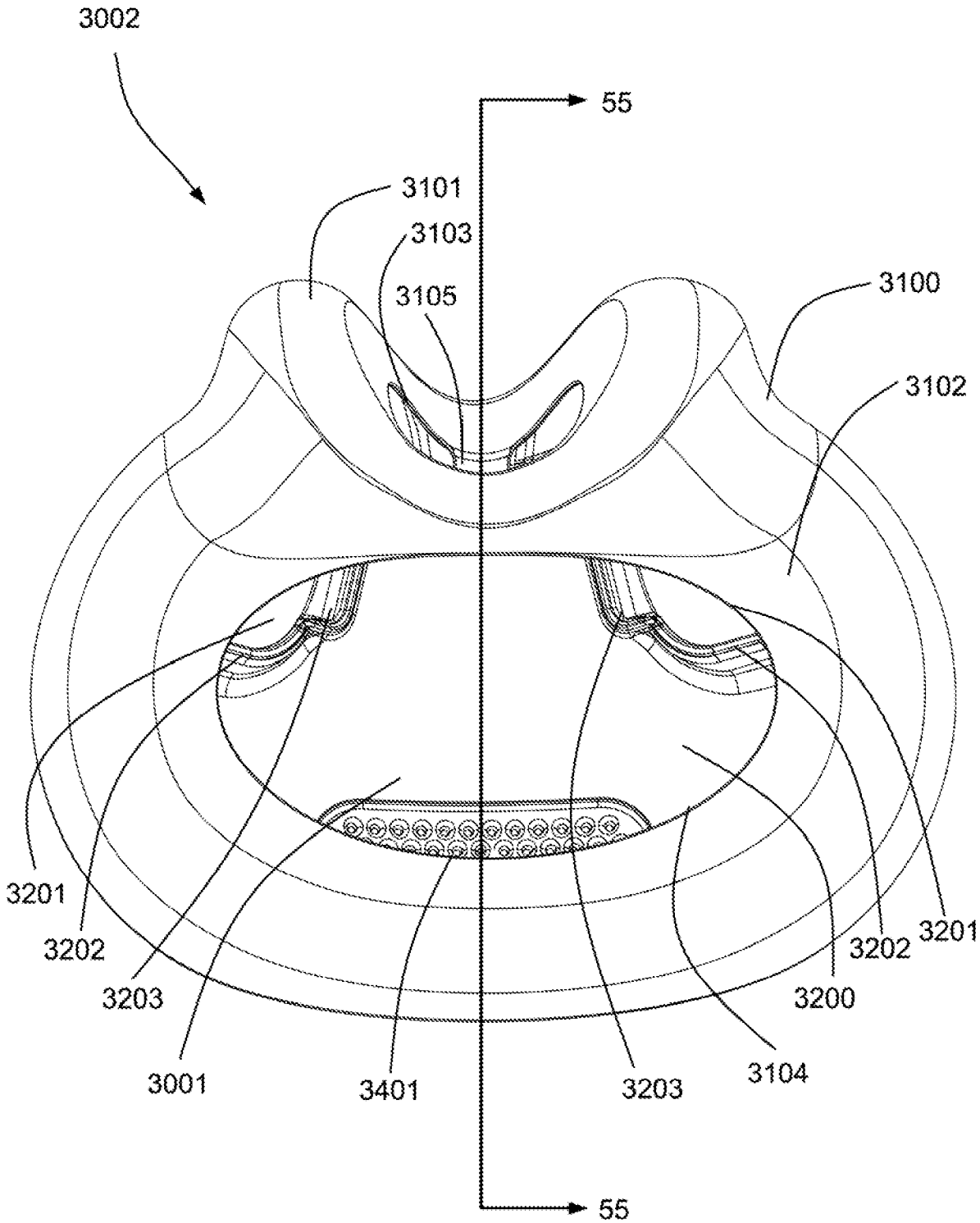
3002
55
3101
3103
3105
3100
3102
3201
3202
3203
3001
3401
3203
3104
3200
3202
3201
55

FIG. 54

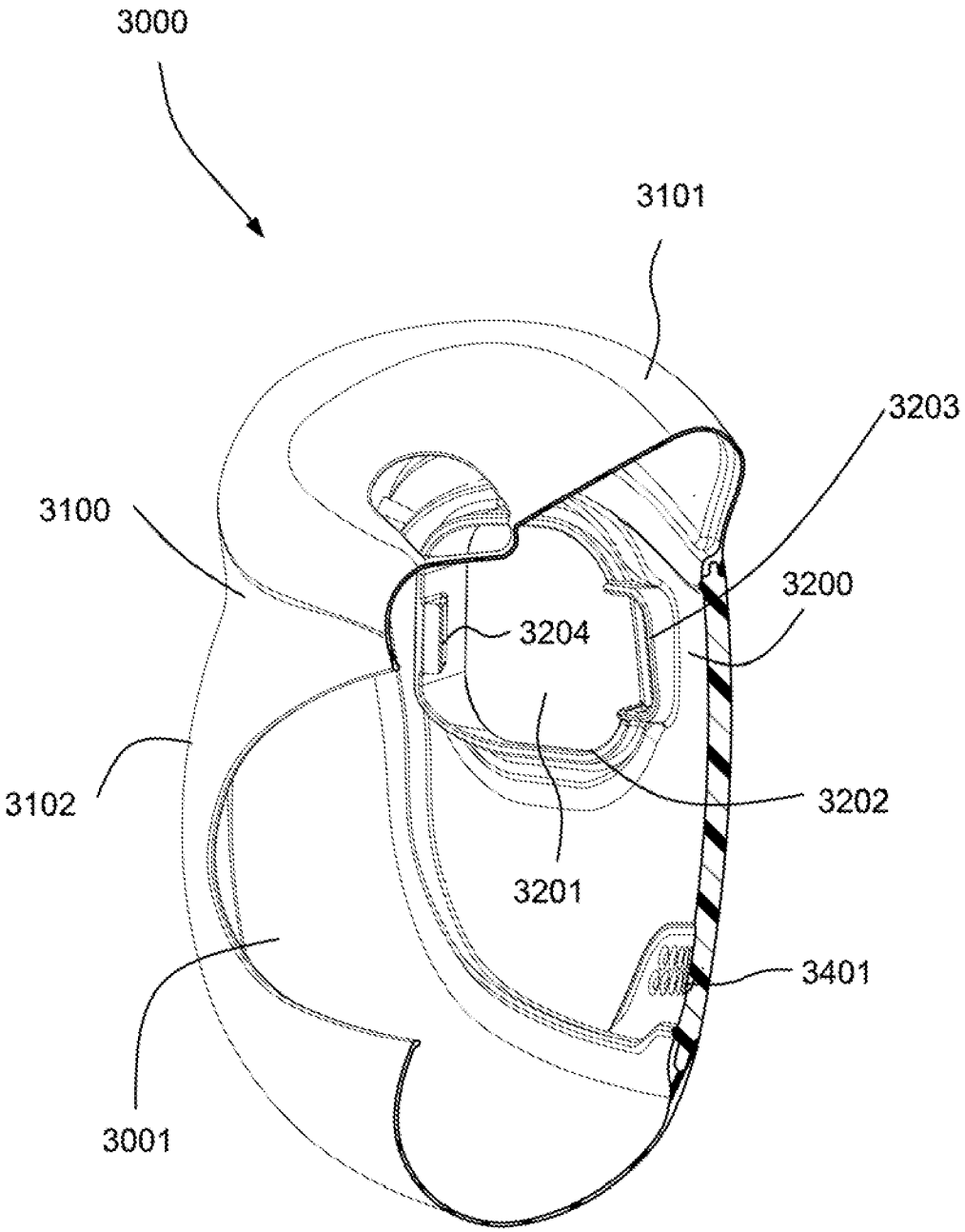

FIG. 55

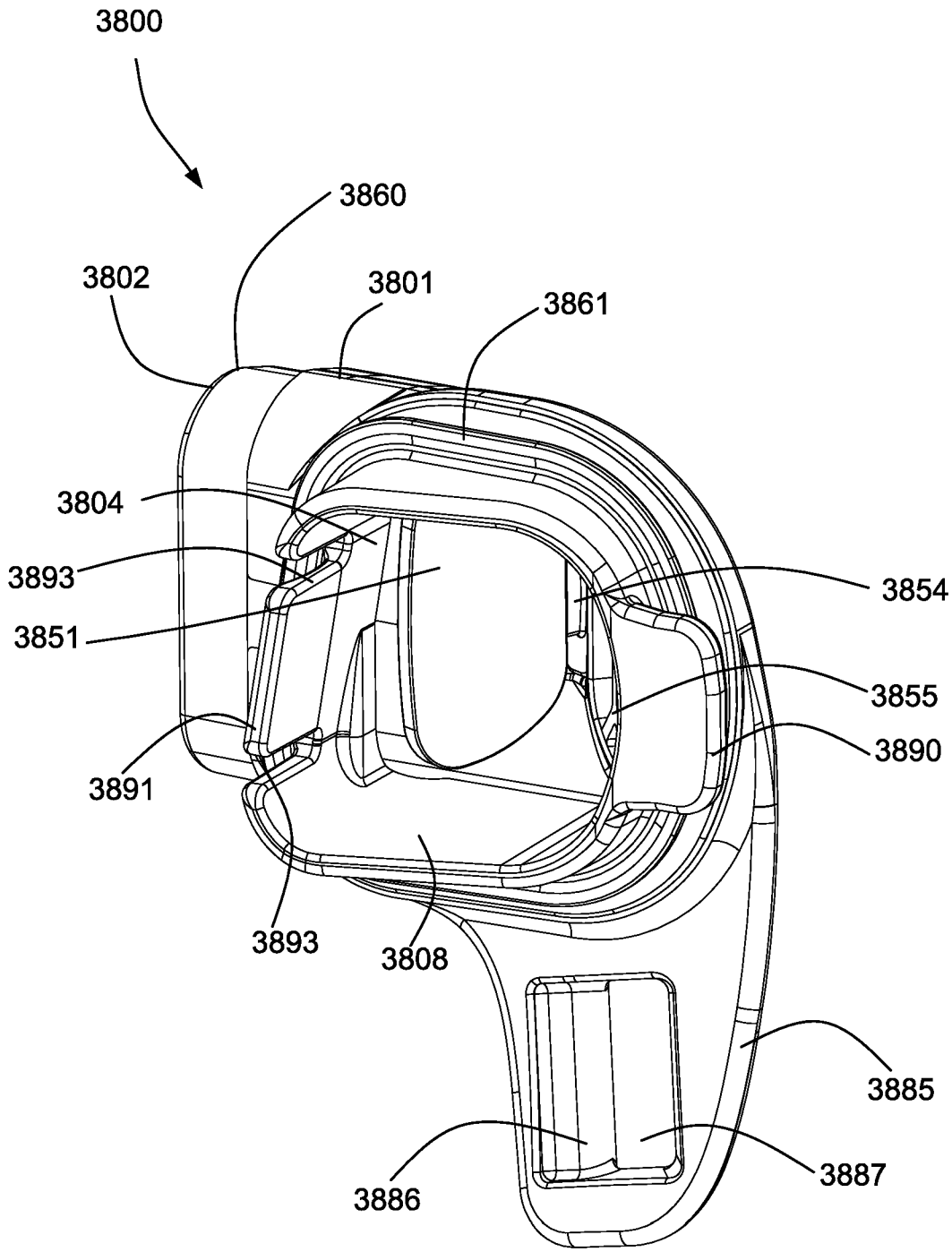
3800
3860
3802
3801
3861
3804
3893
3851
3854
3855
3890
3891
3893
3808
3885
3886
3887

FIG. 56

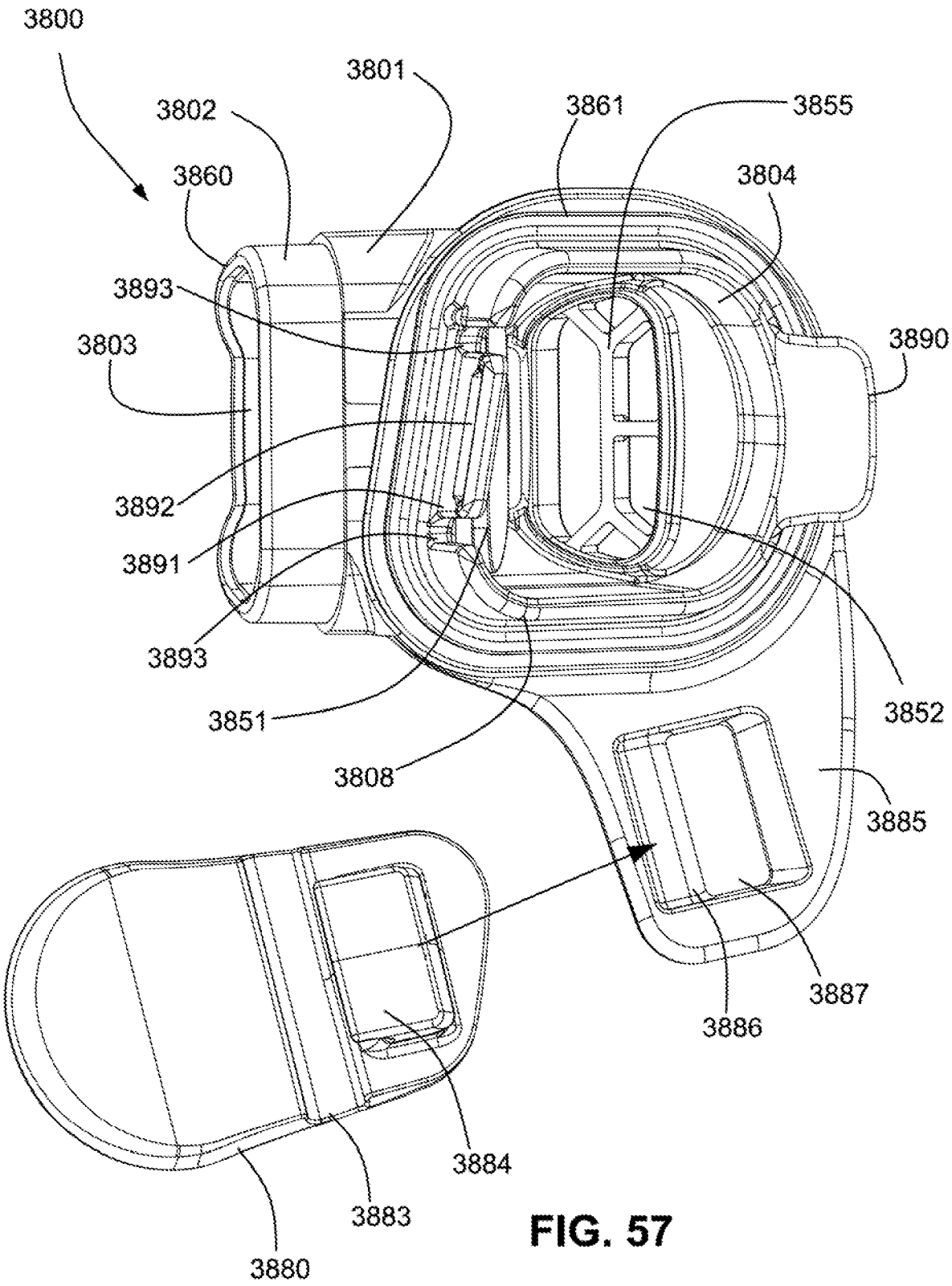
3800
3801
3802
3861
3855
3860
3804
3893
3803
3890
3892
3891
3893
3852
3851
3808
3885
3887
3886
3884
3883
3880

FIG. 57

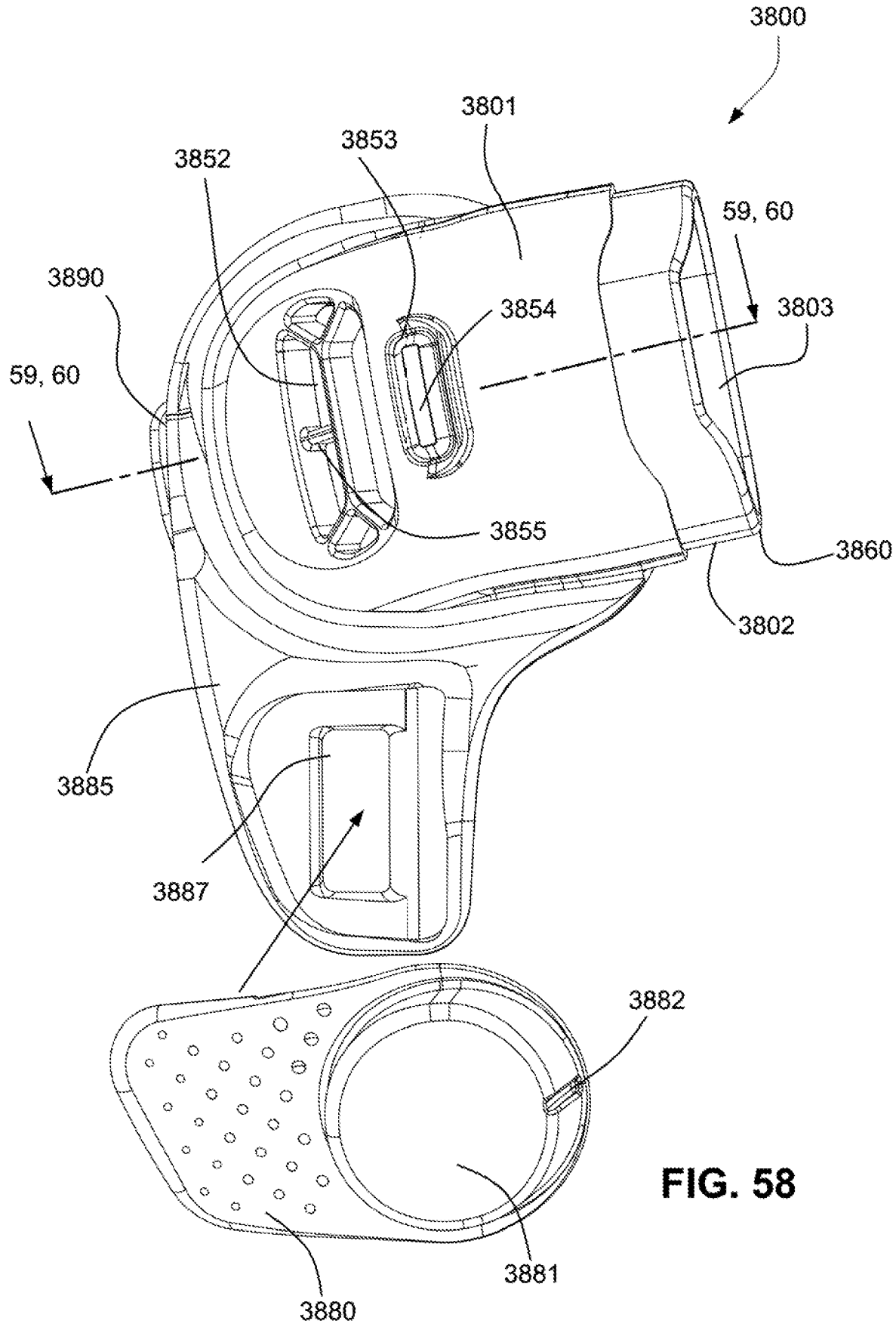
3800
3801
3853
3852
59, 60
3890
3854
3803
59, 60
3855
3860
3802
3885
3887
3882
3881
3880

FIG. 58

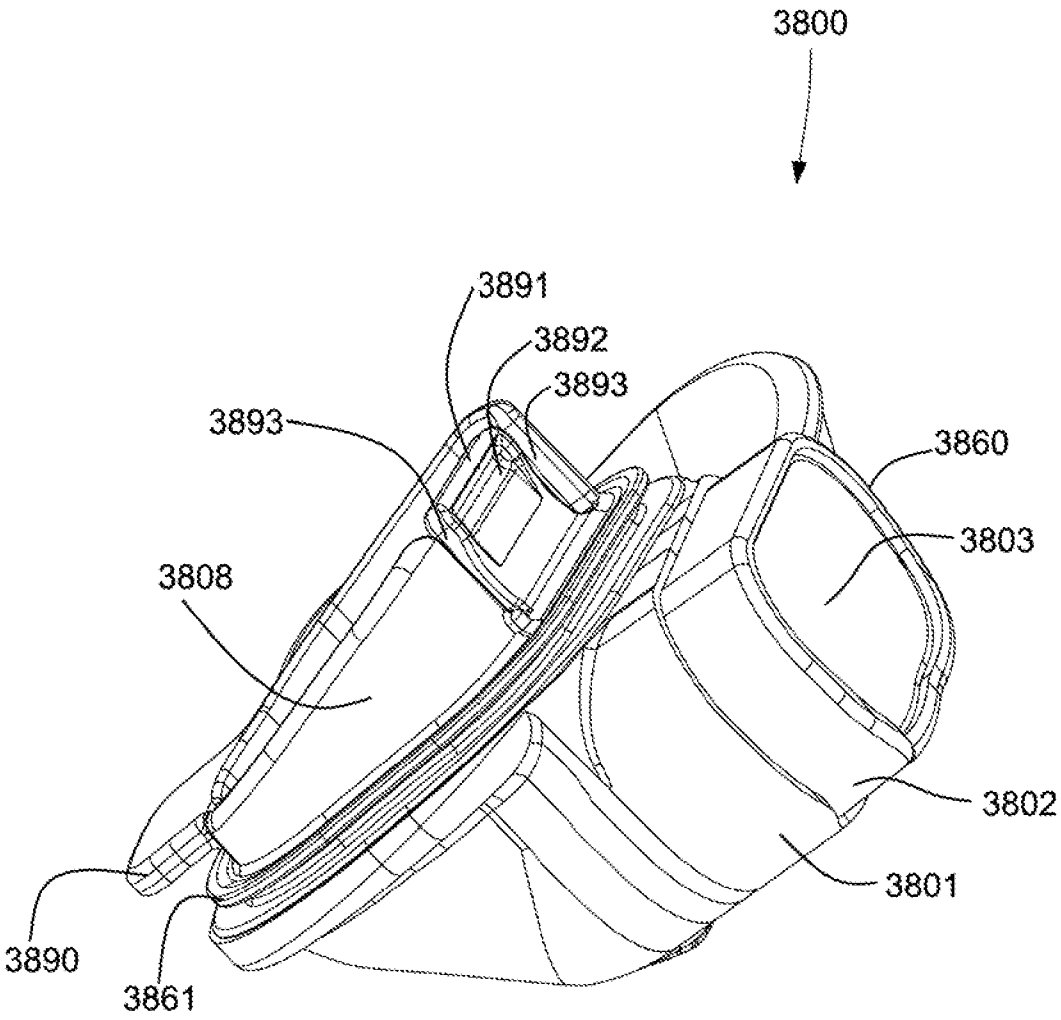

FIG. 59

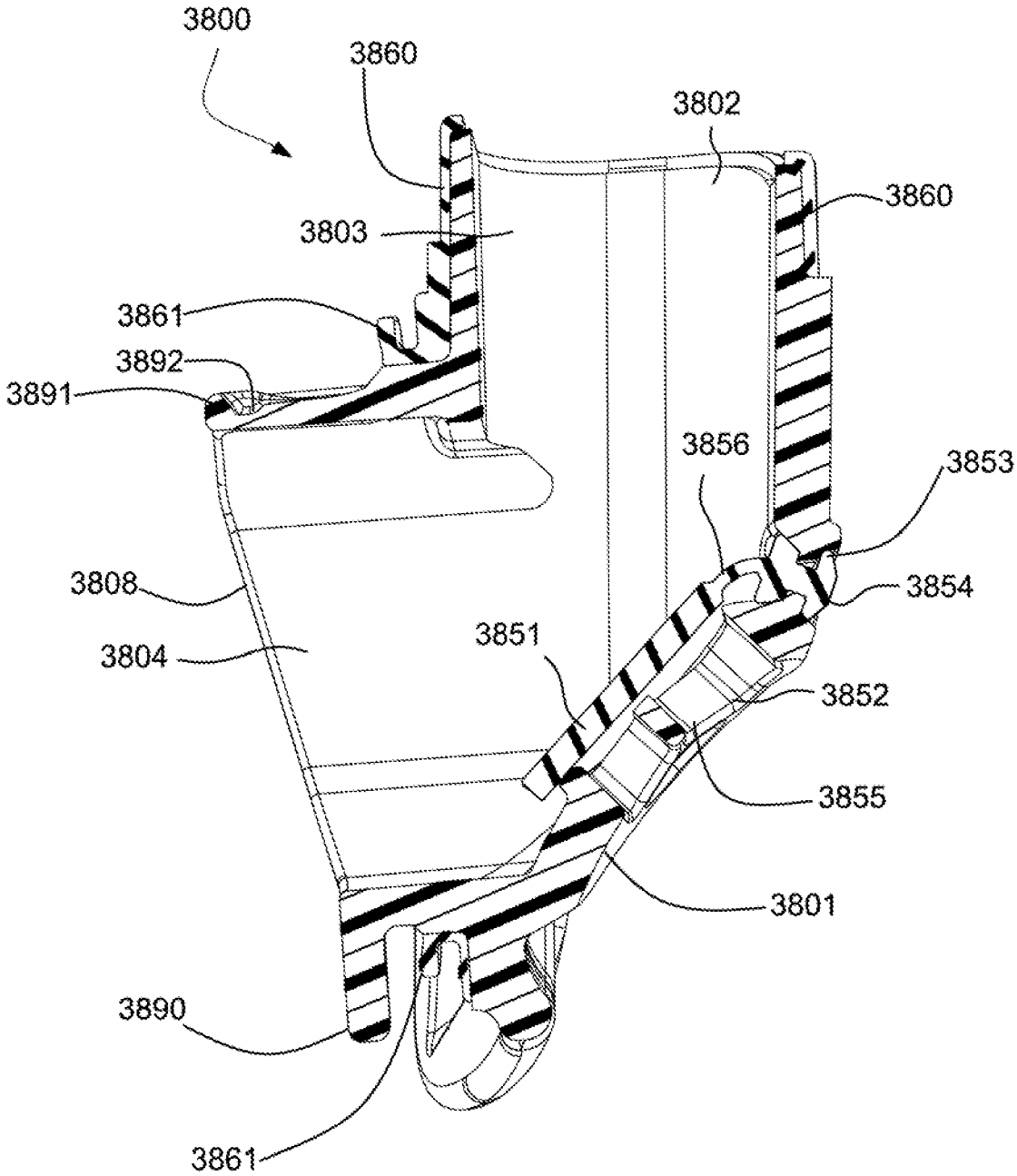
3800
3860
3802
3860
3803
3861
3892
3891
3856
3853
3808
3854
3851
3804
3852
3855
3801
3890
3861

FIG. 60

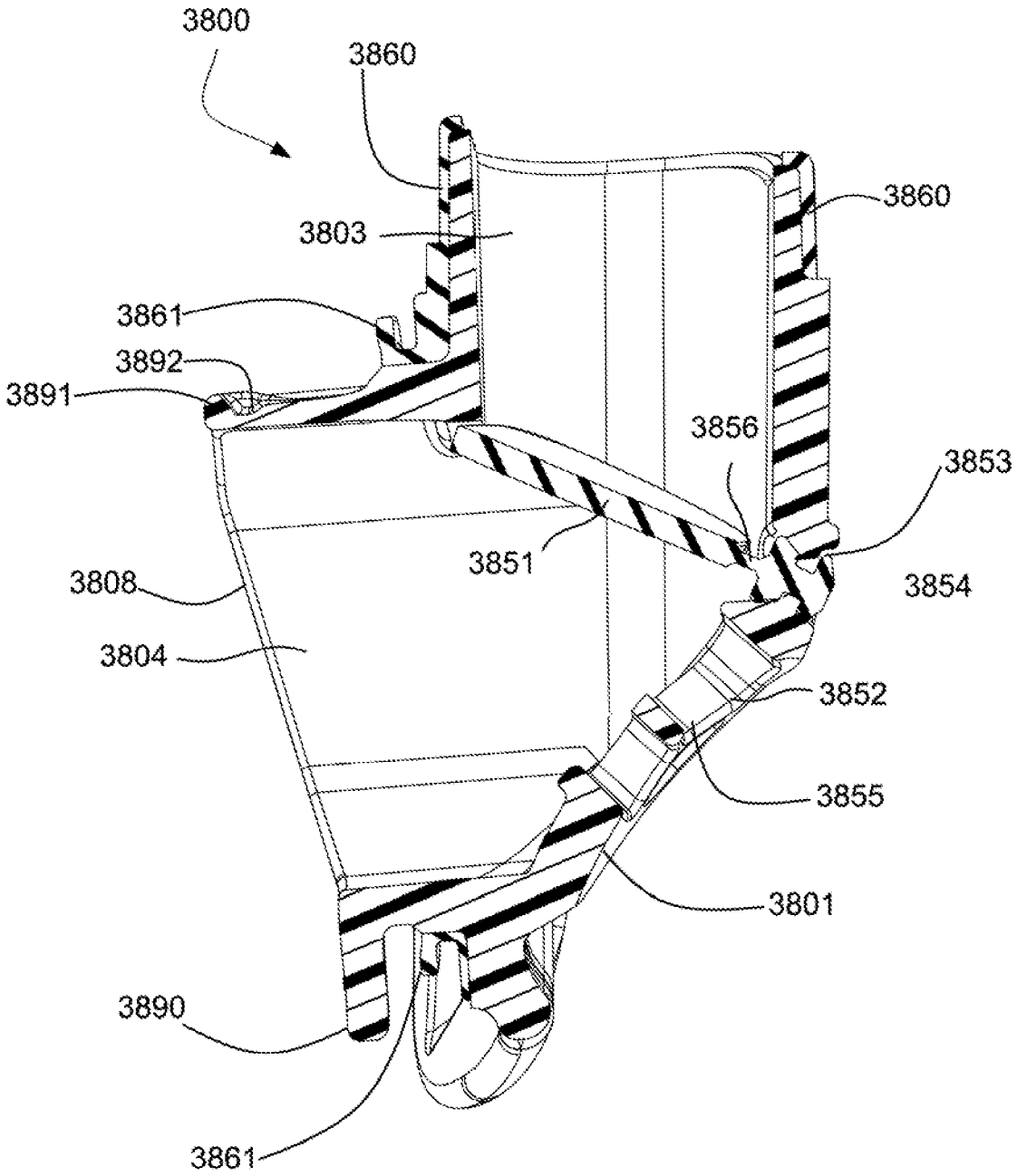
3800
3860
3803
3860
3861
3892
3891
3856
3853
3851
3854
3808
3804
3852
3855
3801
3890
3861

FIG. 61

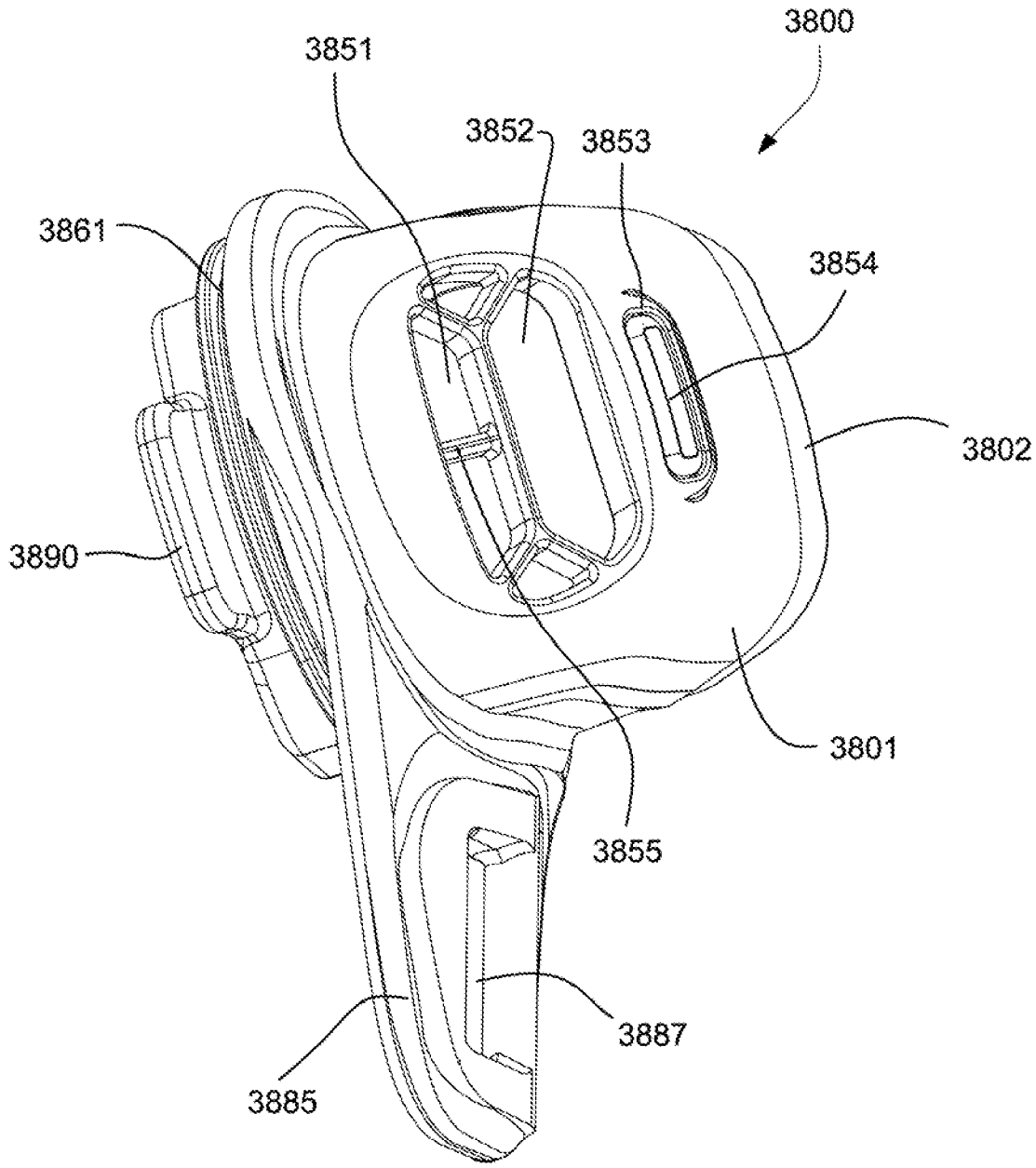

FIG. 62

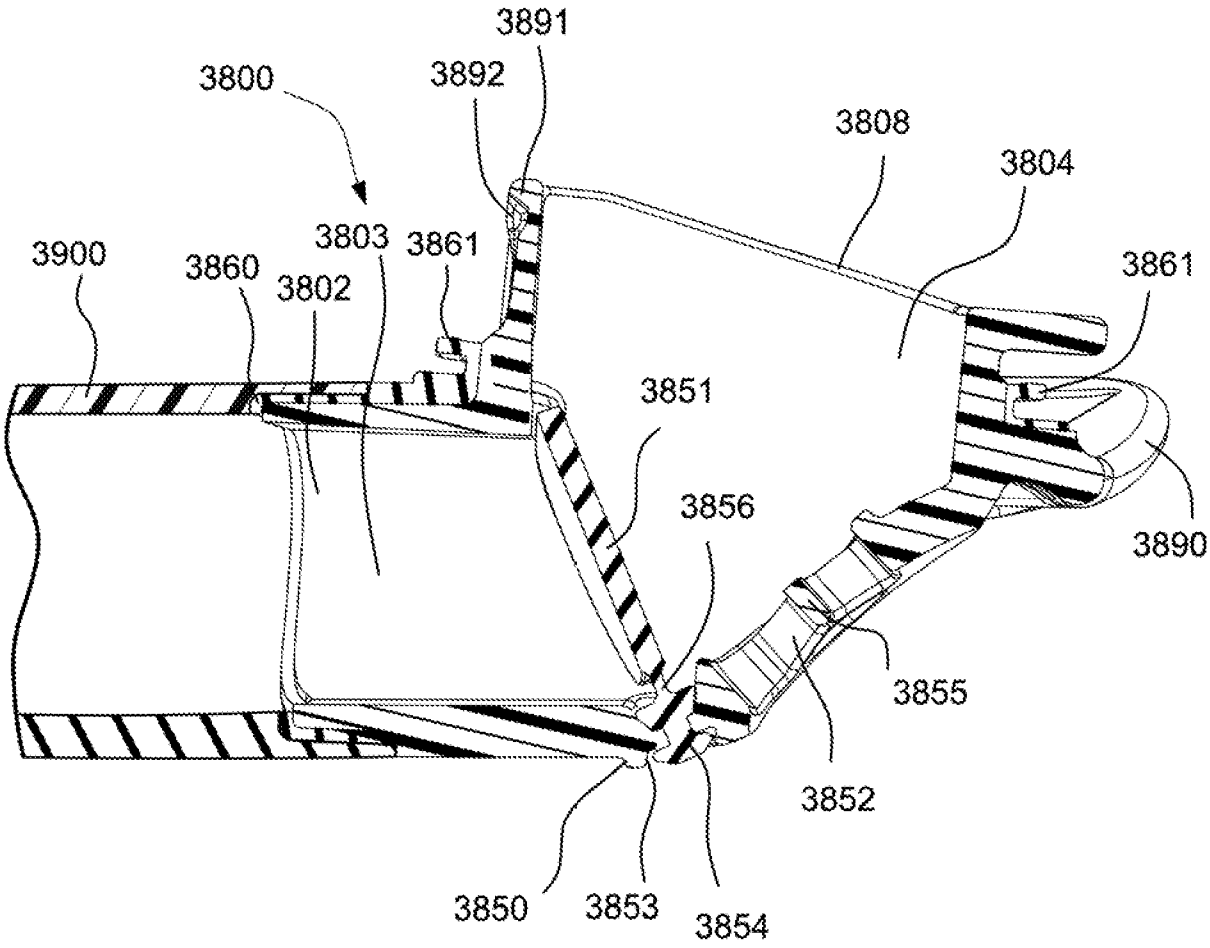
3891
3800
3892
3808
3804
3803
3861
3900
3860
3802
3861
3851
3856
3890
3855
3852
3850
3853
3854

FIG. 63

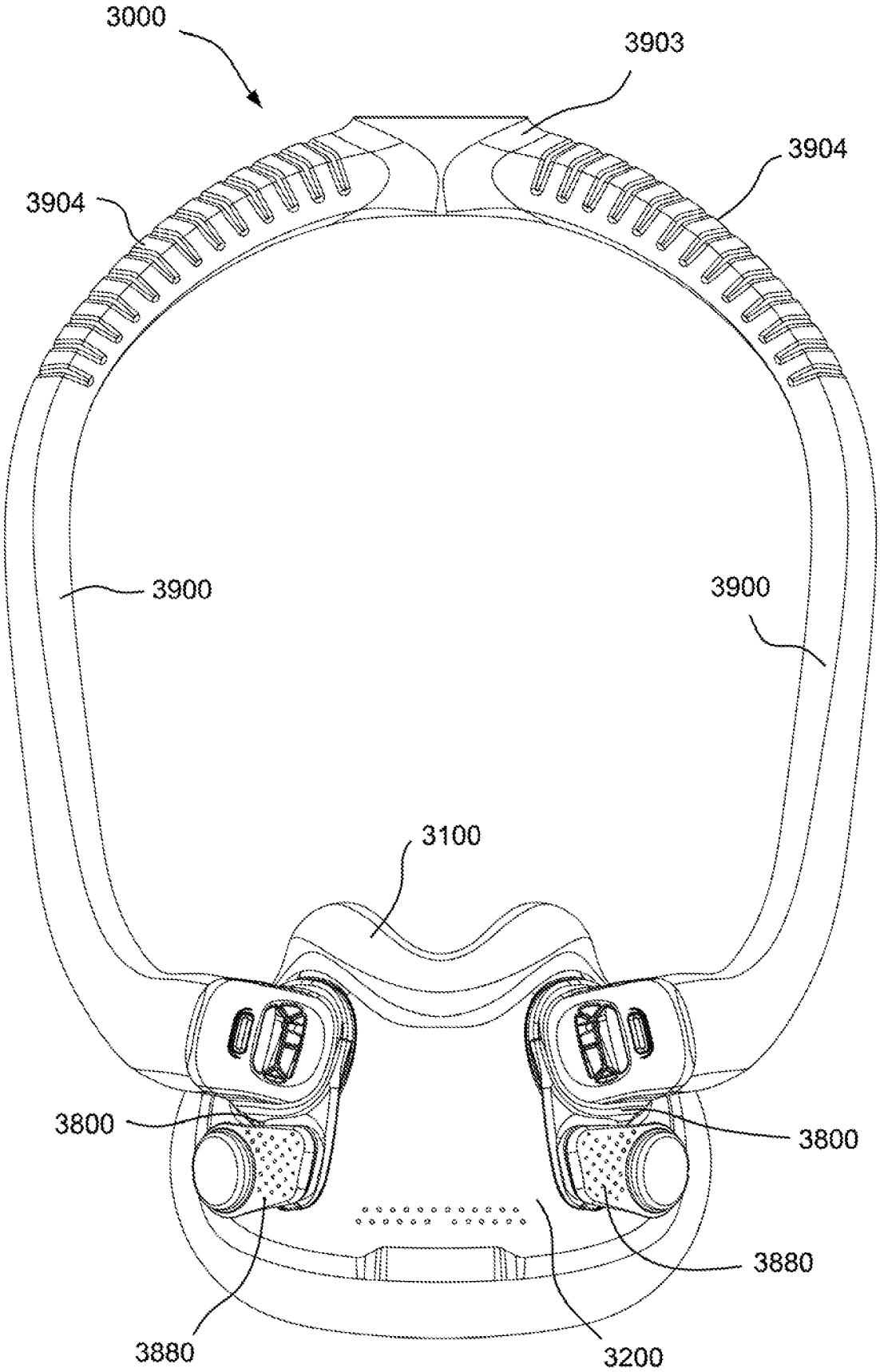

FIG. 64

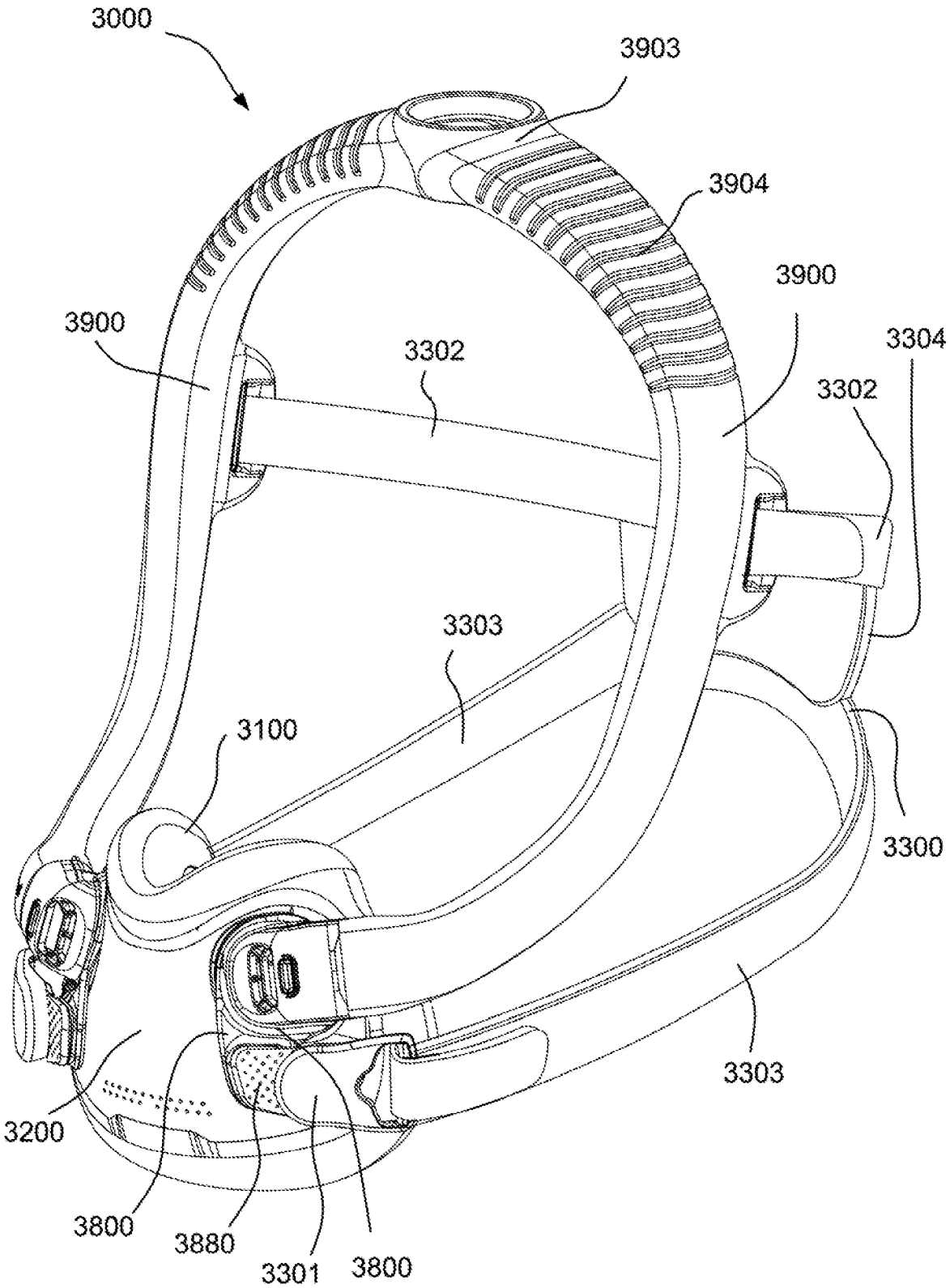
3000
3903
3904
3900
3900
3304
3302
3302
3303
3100
3300
3303
3200
3800
3880
3301
3800

FIG. 65

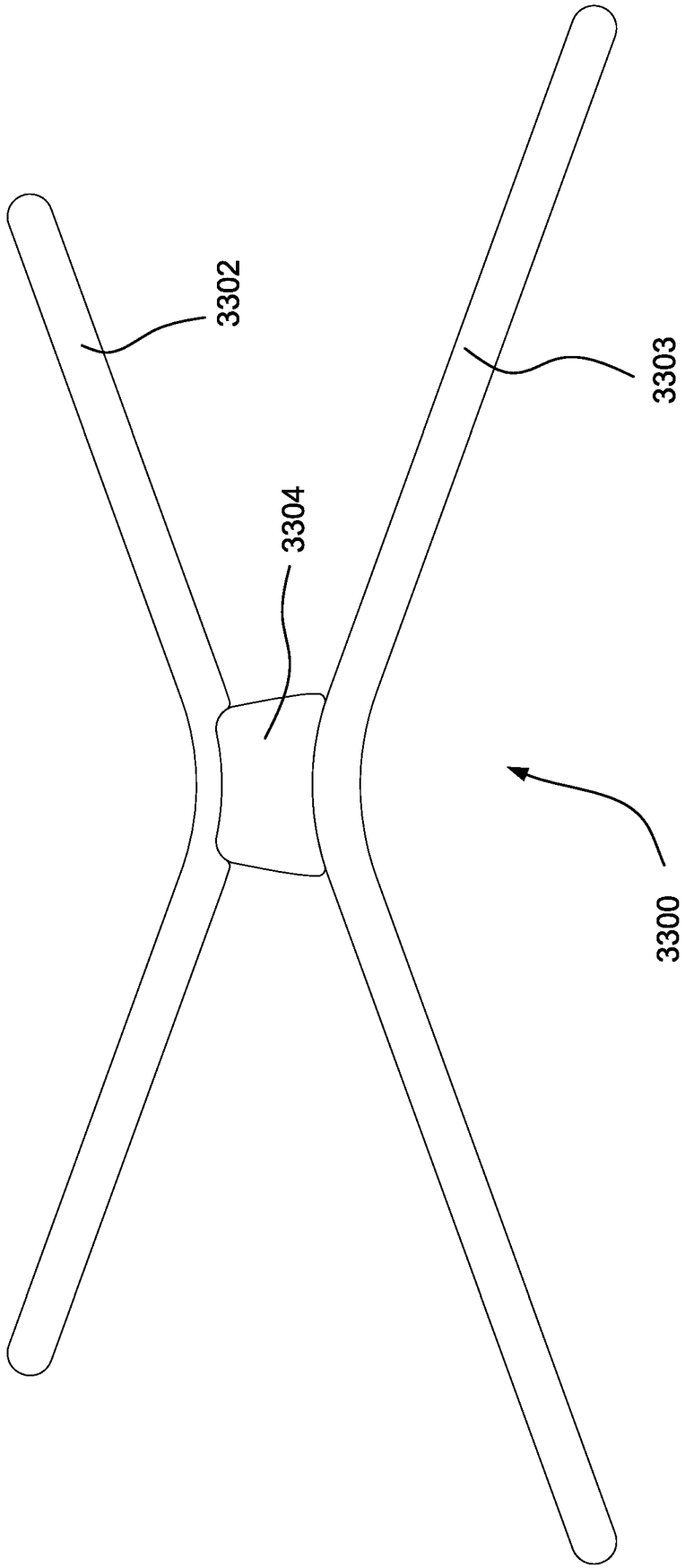

FIG. 66

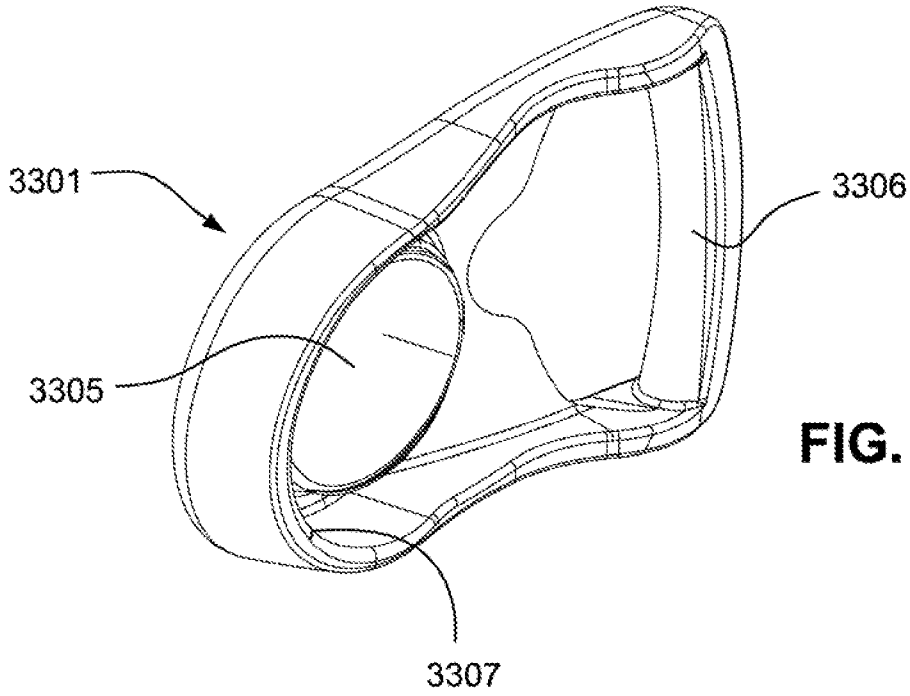

FIG. 67

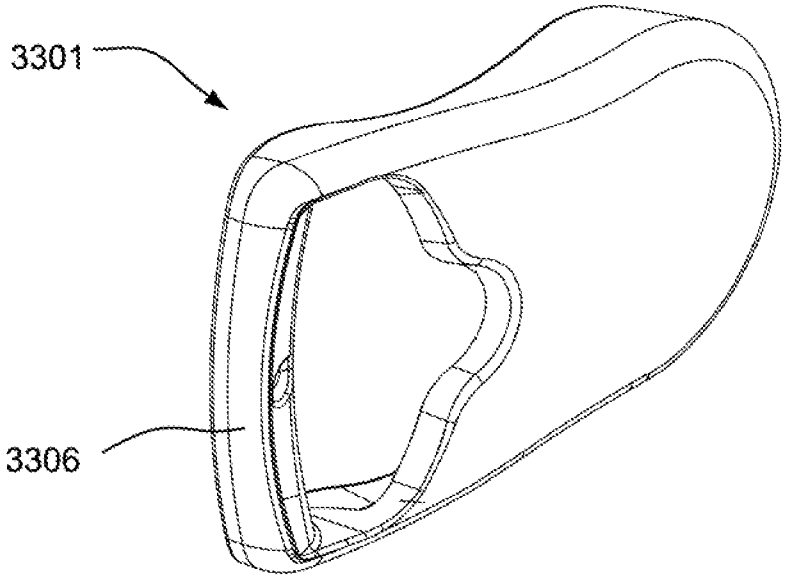

FIG. 68

INTERNATIONAL SEARCH REPORT

International application No.
PCT/AU2018/051382

A. CLASSIFICATION OF SUBJECT MATTER

A61M 16/06 (2006.01) A61M 16/20 (2006.01)

According to International Patent Classification (IPC) or to both national classification and IPC

B. FIELDS SEARCHED

Minimum documentation searched (classification system followed by classification symbols)

Documentation searched other than minimum documentation to the extent that such documents are included in the fields searched

Electronic data base consulted during the international search (name of data base and, where practicable, search terms used)

PATENW: IPC/CPC: A61M16/06/low, A61M16/08/low, A61M16/208/low.
KEYWORDS: asphyxia, ambient, two, second, conduit, inlet, chamber, mask, valve, pressurise, plenum, deliver, connect, flap, vent, opening, diffuse, guide, flow, gas, elbow, connector, space, circumference, rim, seal, leak, silicone, integrated, over moulded, inferior, otobasion, ear, tie, clip, tab, protrusion, magnet, releasable, sequential, first, subsequent, sequential, and like terms.
GOOGLE PATENT and ESPACENET: KEYWORDS: respiratory, mask, pneumatic, pressurised, valve, anti-asphyxia, and like terms.
CPC: A61M16/06/low, A61M16/0616/low, A61M16/0683/low, A61M16/208/low, A61M16/087/low.
Applicant/Inventor names searched in internal databases provided by IP Australia.

C. DOCUMENTS CONSIDERED TO BE RELEVANT

Category*	Citation of document, with indication, where appropriate, of the relevant passages	Relevant to claim No.
	Documents are listed in the continuation of Box C	

[X] Further documents are listed in the continuation of Box C [X] See patent family annex

* Special categories of cited documents:
"A" document defining the general state of the art which is not considered to be of particular relevance
"E" earlier application or patent but published on or after the international filing date
"L" document which may throw doubts on priority claim(s) or which is cited to establish the publication date of another citation or other special reason (as specified)
"O" document referring to an oral disclosure, use, exhibition or other means
"P" document published prior to the international filing date but later than the priority date claimed
"T" later document published after the international filing date or priority date and not in conflict with the application but cited to understand the principle or theory underlying the invention
"X" document of particular relevance; the claimed invention cannot be considered novel or cannot be considered to involve an inventive step when the document is taken alone
"Y" document of particular relevance; the claimed invention cannot be considered to involve an inventive step when the document is combined with one or more other such documents, such combination being obvious to a person skilled in the art
"&" document member of the same patent family

Date of the actual completion of the international search	Date of mailing of the international search report
23 April 2019	23 April 2019

Name and mailing address of the ISA/AU

AUSTRALIAN PATENT OFFICE
PO BOX 200, WODEN ACT 2606, AUSTRALIA
Email address: pct@ipaustralia.gov.au

Authorised officer

Heather Abulafia
AUSTRALIAN PATENT OFFICE
(ISO 9001 Quality Certified Service)
Telephone No. +61262832360

INTERNATIONAL SEARCH REPORT C (Continuation). DOCUMENTS CONSIDERED TO BE RELEVANT		International application No. **PCT/AU2018/051382**
Category*	Citation of document, with indication, where appropriate, of the relevant passages	Relevant to claim No.
X A	WO 2012/154883 A2 (CAREFUSION 207 INC.) 15 November 2012 Fig. 1, 2, 7; Para [0052, 0054, 0058, 0078, 0079, 00202]	1-22, 27-44, 51-58 23-26, 45-50
X A	WO 2006/130903 A1 (RESMED LIMITED) 14 December 2006 Fig. 1, 11, 16, 40-44, 122-140; Para [0003, 00214, 00215, 0305]	1-22, 27-44, 51-58 23-26, 45-50
X A	WO 2014/183167 A1 (RESMED LIMITED) 20 November 2014 Fig. 3a-3u, 17a-18f, 20a-20s, 24a-d, 25i, 26a-d; Para [263, 265, 340, 357, 421-423, 426, 437, 443, 499, 503, 505]	1-44, 51-58 45-50
X A	WO 2017/049357 A1 (RESMED LIMITED) 30 March 2017 Fig. 1A-C, 4-24; Para [0021, 0173-0176, 0181, 0207, 0208, 0223, 0230, 0247-0249, 0362]	1-6, 8-44, 51-58 7, 45-50
A	WO 2013/006899 A1 (RESMED LIMITED) 17 January 2013 Fig. 5-30, 38-47, 69A-70; Para [00135]	1-10, 11-14, 20, 44
A	WO 2016/193859 A1 (KONINKLIJKE PHILIPS N.V.) 08 December 2016 Whole document	1, 53-57
A	WO 2017/124152 A1 (RESMED LIMITED) 27 July 2017 Whole document	1, 53-57
A	WO 2008/070929 A1 (RESMED LIMITED) 19 June 2008 Whole document	1, 53-57
A	WO 2012/040791 A1 (RESMED LIMITED) 05 April 2012 Whole document	1-9
A	WO 2017/049358 A1 (RESMED LIMITED) 30 March 2017 Fig. 8E, 15A-F, 33A-G, 37A-E; Para [0086, 0245, 0334, 425, 435]	11-19, 28-33
A	US 2009/0050156 A1 (NG et al.) 26 February 2009 Fig. 2-15-1 - 2-15-3, 5-1; Para [0120, 0175, 0177]	11-13, 15-20
A	WO 2015/048849 A1 (RESMED LIMITED) 09 April 2015 Fig. 3-5-6, 3-5-7; Para [174, 181]	11-14
A	WO 2004/096332 A1 (RESMED LIMITED) 11 November 2004 Fig. 7-9; Para [00267, 00270]	27-31
A	US 2009/0223521 A1 (HOWARD et al.) 10 September 2009 Fig. 2; Para [0121, 0129, 0133]	27, 28, 30-34
A	WO 2007/045008 A1 (RESMED LIMITED) 26 April 2007 Fig. 204-221; Para [00185, 00186]	27, 28, 31-34

INTERNATIONAL SEARCH REPORT C (Continuation). DOCUMENTS CONSIDERED TO BE RELEVANT		International application No. **PCT/AU2018/051382**
Category*	Citation of document, with indication, where appropriate, of the relevant passages	Relevant to claim No.
A	WO 2007/009182 A1 (MAP MEDIZIN-TECHNOLOGIE GMBH et al.) 25 January 2007 Fig. 13-15; Para [00137, 00138, 00195]	27, 28, 31-34
A	WO 2017/049356 A1 (RESMED LIMITED) 30 March 2017 Fig. 59-68, 75-91, 103; Para [0274]	35-42
A	WO 2014/110622 A1 (RESMED LIMITED) 24 July 2014 Fig. 64-72	35-38
A	WO 2017/120643 A1 (RESMED LIMITED) 20 July 2017 Fig. 4-9	35-38
A	EP 3254720 A1 (RESGOOD MEDICAL CO., LTD) 13 December 2017 Fig. 2, 3; Para [0011]	44
A	WO 2013/068911 A1 (KONINKLIJKE PHILIPS ELECTRONICS N.V.) 16 May 2013 Fig. 2-4; Para [32]	44
A	US 2016/0144146 A1 (FISHER & PAYKEL HEALTHCARE LIMITED) 26 May 2016 Fig. 83; Para [0450]	44

INTERNATIONAL SEARCH REPORT

International application No.
PCT/AU2018/051382

Box No. II Observations where certain claims were found unsearchable (Continuation of item 2 of first sheet)

This international search report has not been established in respect of certain claims under Article 17(2)(a) for the following reasons:

1. ☐ Claims Nos.:
because they relate to subject matter not required to be searched by this Authority, namely:
the subject matter listed in Rule 39 on which, under Article 17(2)(a)(i), an international search is not required to be carried out, including

2. ☐ Claims Nos.:
because they relate to parts of the international application that do not comply with the prescribed requirements to such an extent that no meaningful international search can be carried out, specifically:

3. ☐ Claims Nos:
because they are dependent claims and are not drafted in accordance with the second and third sentences of Rule 6.4(a)

Box No. III Observations where unity of invention is lacking (Continuation of item 3 of first sheet)

This International Searching Authority found multiple inventions in this international application, as follows:

See Supplemental Box for Details

1. ☒ As all required additional search fees were timely paid by the applicant, this international search report covers all searchable claims.

2. ☐ As all searchable claims could be searched without effort justifying additional fees, this Authority did not invite payment of additional fees.

3. ☐ As only some of the required additional search fees were timely paid by the applicant, this international search report covers only those claims for which fees were paid, specifically claims Nos.:

4. ☐ No required additional search fees were timely paid by the applicant. Consequently, this international search report is restricted to the invention first mentioned in the claims; it is covered by claims Nos.:

Remark on Protest

☐ The additional search fees were accompanied by the applicant's protest and, where applicable, the payment of a protest fee.

☐ The additional search fees were accompanied by the applicant's protest but the applicable protest fee was not paid within the time limit specified in the invitation.

☒ No protest accompanied the payment of additional search fees.

Supplemental Box

Continuation of: **Box III**
This International Application does not comply with the requirements of unity of invention because it does not relate to one invention or to a group of inventions so linked as to form a single general inventive concept.

This Authority has found that there are different inventions based on the following features that separate the claims into distinct groups:

1. **Claims 1 to 10** are directed to *a patient interface comprising an anti-asphyxia valve*. The feature of *the anti-asphyxia valve, in particular the anti-asphyxia valve including an anti-asphyxia valve hole and an anti-asphyxia valve flap and wherein the anti-asphyxia valve of each of the first conduit connector and the second conduit connector is configured to operate independently of the other* is specific to this group of claims.

2. **Claims 11 to 20** are directed to *a patient interface comprising a first and second conduit connector*. The features of *each of the first conduit connector and the second conduit connector further comprises at least one conduit connector vent hole and the further details of the conduit connector comprising a diffuser cavity containing a diffuser material and a conduit connector spacer defined in claims 15 to 20* are specific to this group of claims.

3. **Claims 21 and 22** are directed to *a patient interface comprising a plenum chamber*. The feature of *the plenum chamber comprises at least one plenum chamber vent hole* is specific to this group of claims.

4. **Claims 23 to 26** are directed to *a patient interface comprising a first and second conduit connector*. The feature of *the first conduit connector and the second conduit connector further comprises a conduit connection end that defines a conduit connector inlet hole* is specific to this group of claims.

5. **Claims 27 to 34** are directed to *a patient interface comprising a plenum chamber and a first and second conduit connector*. The features of *the connection between the first and second plenum chamber hole and the first and second conduit connector and the further details of a seal between the conduit connector and corresponding plenum chamber hole constructed of silicone defined in claims 31 to 34* are specific to this group of claims.

6. **Claims 35 to 43** are directed to *a patient interface comprising a positioning and stabilising structure*. The features of *a pair of superior ties and a pair of inferior ties and the further details of a clip to releasably connect each of the inferior ties to a corresponding inferior tie connectors and the conduit connectors comprising a flange to be connected to corresponding inferior tie tabs defined in claims 36 to 43* are specific to this group of claims.

7. **Claims 44 to 50** are directed to *a patient interface comprising a first and second conduit connector*. The features of *a first tab and a second tab to releasably connect the first conduit connector and the second conduit connector to the plenum chamber at the first plenum chamber hole and the second plenum chamber hole, respectively and the further details of the tabs and the slots proximal the plenum chamber holes defined in claims 47 to 50* are specific to this group of claims.

8. **Claims 51 and 52** are directed to *a patient interface comprising a seal-forming structure*. The features of *a nasal portion configured to seal around the patient's nares and an oral portion configured to seal around the patient's mouth* are specific to this group of claims.

9. **Claims 53 to 57** are directed to *a patient interface comprising a connection port housing*. The feature of *each of the first conduit and the second conduit in pneumatic communication with the connection port housing* is specific to this group of claims.

10. **Claim 58** is directed to *a respiratory therapy system*. The features of *a respiratory pressure therapy device and an air circuit* are specific to this group of claims.

PCT Rule 13.2, first sentence, states that unity of invention is only fulfilled when there is a technical relationship among the claimed inventions involving one or more of the same or corresponding special technical features. PCT Rule 13.2, second sentence, defines a special technical feature as a feature which makes a contribution over the prior art.

When there is no special technical feature common to all the claimed inventions there is no unity of invention.

Supplemental Box

In the above groups of claims, the identified features may have the potential to make a contribution over the prior art but are not common to all the claimed inventions and therefore cannot provide the required technical relationship. The only feature common to all of the claimed inventions and which provides a technical relationship among them is *claim 1 per se*. However all of these features does not make a contribution over the prior art because they are disclosed in:

> **WO 2012/154883 A2** (CAREFUSION 207, INC.) 15 November 2012. See: Fig. 1, 7; and Para [0054, 0058, 0078, 0079, 00202];

Furthermore, the feature defined in claim 11 of *each of the first conduit connector and the second conduit connector further comprises at least one conduit connector vent hole that is configured to allow a continuous flow of gases exhaled by the patient from an interior of the patient interface chamber to ambient, the at least one conduit connector vent hole being sized and shaped to maintain the therapeutic pressure in the patient interface chamber in use* is merely a design choice in light of the aforementioned citation. The aforementioned citation discloses vent holes located in the plenum chamber (Fig. 1, 7, items 123, 123A) and it is common general knowledge in the art that these vent holes will achieve the known benefit of removing exhaled air and carbon dioxide from the respiratory circuit when placed anywhere in the respiratory circuit. Therefore the features of claim 11 do not involve an inventive step.

In light of this, group (2) has been further separated into the following distinct groups:

> 2(a). **Claims 11 to 14** are directed to *a patient interface comprising a first and second conduit connector*. The feature of *each of the first conduit connector and the second conduit connector further comprises at least one conduit connector vent hole and further details of a vent inlet and outlet and a baffle to prevent the flow of air from passing directly to atmosphere* is specific to this group of claims.
>
> 2(b). **Claims 15 to 19** are directed to *a patient interface comprising a first and second conduit connector*. The feature of *a diffuser cavity containing a diffuser material* is specific to this group of claims.
>
> 2(c). **Claim 20** is directed to *a patient interface comprising a first and second conduit connector*. The feature of *a conduit connector spacer to maintain a gap between a portion of each of the first conduit connector and the second conduit connector and the plenum chamber* is specific to this group of claims.

Therefore in the light of this document these common features cannot be a special technical feature. Therefore there is no special technical feature common to all the claimed inventions and the requirements for unity of invention are consequently not satisfied *a posteriori*.

INTERNATIONAL SEARCH REPORT Information on patent family members	International application No. **PCT/AU2018/051382**

This Annex lists known patent family members relating to the patent documents cited in the above-mentioned international search report. The Australian Patent Office is in no way liable for these particulars which are merely given for the purpose of information.

Patent Document/s Cited in Search Report		**Patent Family Member/s**	
Publication Number	**Publication Date**	**Publication Number**	**Publication Date**
WO 2012/154883 A2	15 November 2012	WO 2012154883 A2	15 Nov 2012
		CA 2835491 A1	15 Nov 2012
		CN 103702706 A	02 Apr 2014
		CN 103702706 B	20 Jun 2017
		CN 107224288 A	03 Oct 2017
		EP 2707071 A2	19 Mar 2014
		JP 2014516672 A	17 Jul 2014
		JP 6140148 B2	31 May 2017
		JP 2017080512 A	18 May 2017
		JP 2018167079 A	01 Nov 2018
		MX 2013013159 A	27 May 2014
		MX 336804 B	02 Feb 2016
		US 2012285467 A1	15 Nov 2012
		US 8695602 B2	15 Apr 2014
		US 2012285461 A1	15 Nov 2012
		US 8783252 B2	22 Jul 2014
		US 2012285466 A1	15 Nov 2012
		US 8881730 B2	11 Nov 2014
		US 2012285468 A1	15 Nov 2012
		US 8887727 B2	18 Nov 2014
		US 2012285464 A1	15 Nov 2012
		US 8905028 B2	09 Dec 2014
		US 2012285462 A1	15 Nov 2012
		US 8910635 B2	16 Dec 2014
		US 2012285448 A1	15 Nov 2012
		US 8915250 B2	23 Dec 2014
		US 2012285465 A1	15 Nov 2012
		US 8925548 B2	06 Jan 2015
		US 2012285457 A1	15 Nov 2012
		US 8944059 B2	03 Feb 2015
		US 2012285455 A1	15 Nov 2012
		US 8944060 B2	03 Feb 2015
		US 2012289838 A1	15 Nov 2012
		US 9022029 B2	05 May 2015
		US 2012285463 A1	15 Nov 2012
		US 9044562 B2	02 Jun 2015

Due to data integration issues this family listing may not include 10 digit Australian applications filed since May 2001.

INTERNATIONAL SEARCH REPORT Information on patent family members	International application No. **PCT/AU2018/051382**

This Annex lists known patent family members relating to the patent documents cited in the above-mentioned international search report. The Australian Patent Office is in no way liable for these particulars which are merely given for the purpose of information.

Patent Document/s Cited in Search Report		Patent Family Member/s	
Publication Number	**Publication Date**	**Publication Number**	**Publication Date**
		US 2012289851 A1	15 Nov 2012
		US 2015144131 A1	28 May 2015

Due to data integration issues this family listing may not include 10 digit Australian applications filed since May 2001.

INTERNATIONAL SEARCH REPORT Information on patent family members	International application No. **PCT/AU2018/051382**

This Annex lists known patent family members relating to the patent documents cited in the above-mentioned international search report. The Australian Patent Office is in no way liable for these particulars which are merely given for the purpose of information.

Patent Document/s Cited in Search Report		**Patent Family Member/s**	
Publication Number	**Publication Date**	**Publication Number**	**Publication Date**
WO 2006/130903 A1	14 December 2006	WO 2006130903 A1	14 Dec 2006
		AU 2004308536 A1	14 Jul 2005
		AU 2004308536 B2	23 Jun 2011
		AU 2006255476 A1	14 Dec 2006
		AU 2006255476 B2	05 Jul 2012
		AU 2010214658 A1	16 Sep 2010
		AU 2010214658 B2	04 Aug 2011
		CN 1901961 A	24 Jan 2007
		CN 1901961 B	22 Dec 2010
		CN 1973914 A	06 Jun 2007
		CN 1973914 B	14 Jul 2010
		CN 101214402 A	09 Jul 2008
		CN 101214402 B	21 Aug 2013
		CN 101237902 A	06 Aug 2008
		CN 101237902 B	29 Feb 2012
		CN 101628142 A	20 Jan 2010
		CN 101628142 B	26 Mar 2014
		CN 102512741 A	27 Jun 2012
		CN 102512741 B	01 Jul 2015
		CN 103785090 A	14 May 2014
		CN 103785090 B	05 Sep 2017
		CN 104645476 A	27 May 2015
		CN 104645476 B	22 Aug 2017
		CN 107320833 A	07 Nov 2017
		EP 1701759 A1	20 Sep 2006
		EP 1701759 B1	21 Jan 2015
		EP 1890755 A1	27 Feb 2008
		EP 2510968 A1	17 Oct 2012
		EP 2510968 B1	08 Feb 2017
		EP 3228347 A1	11 Oct 2017
		JP 2007516750 A	28 Jun 2007
		JP 5031375 B2	19 Sep 2012
		JP 2008541955 A	27 Nov 2008
		JP 5254787 B2	07 Aug 2013
		JP 2012086080 A	10 May 2012

Due to data integration issues this family listing may not include 10 digit Australian applications filed since May 2001.

INTERNATIONAL SEARCH REPORT Information on patent family members	International application No. **PCT/AU2018/051382**

This Annex lists known patent family members relating to the patent documents cited in the above-mentioned international search report. The Australian Patent Office is in no way liable for these particulars which are merely given for the purpose of information.

Patent Document/s Cited in Search Report		Patent Family Member/s	
Publication Number	**Publication Date**	**Publication Number**	**Publication Date**
		JP 5808265 B2	10 Nov 2015
		JP 2013223804 A	31 Oct 2013
		JP 5997109 B2	28 Sep 2016
		JP 2015116506 A	25 Jun 2015
		JP 6063973 B2	18 Jan 2017
		NZ 547748 A	30 Jul 2010
		NZ 563608 A	31 Mar 2011
		NZ 585133 A	25 Nov 2011
		NZ 591018 A	25 Jan 2013
		NZ 595521 A	28 Jun 2013
		NZ 599406 A	20 Dec 2013
		NZ 606024 A	29 Aug 2014
		NZ 626585 A	26 Feb 2016
		NZ 715396 A	24 Nov 2017
		US 2006237017 A1	26 Oct 2006
		US 7658189 B2	09 Feb 2010
		US 2007186930 A1	16 Aug 2007
		US 7708017 B2	04 May 2010
		US 2007144525 A1	28 Jun 2007
		US 7942148 B2	17 May 2011
		US 2006283461 A1	21 Dec 2006
		US 8136525 B2	20 Mar 2012
		US 2011056497 A1	10 Mar 2011
		US 8402971 B2	26 Mar 2013
		US 2012145158 A1	14 Jun 2012
		US 8915251 B2	23 Dec 2014
		US 2009277452 A1	12 Nov 2009
		US 9032955 B2	19 May 2015
		US 2013239973 A1	19 Sep 2013
		US 9032956 B2	19 May 2015
		US 2011209709 A1	01 Sep 2011
		US 9067033 B2	30 Jun 2015
		US 2010132717 A1	03 Jun 2010
		US 9220860 B2	29 Dec 2015
		US 2015224276 A1	13 Aug 2015
		US 9895508 B2	20 Feb 2018

Due to data integration issues this family listing may not include 10 digit Australian applications filed since May 2001.

INTERNATIONAL SEARCH REPORT Information on patent family members	International application No. **PCT/AU2018/051382**

This Annex lists known patent family members relating to the patent documents cited in the above-mentioned international search report. The Australian Patent Office is in no way liable for these particulars which are merely given for the purpose of information.

Patent Document/s Cited in Search Report		Patent Family Member/s	
Publication Number	**Publication Date**	**Publication Number**	**Publication Date**
		US 2015196726 A1	16 Jul 2015
		US 2016074613 A1	17 Mar 2016
		US 2018133427 A1	17 May 2018
		US 2019070380 A1	07 Mar 2019
		US 2019070381 A1	07 Mar 2019
		US 2019091429 A1	28 Mar 2019
		US 2019105454 A1	11 Apr 2019
		WO 2005063328 A1	14 Jul 2005
		WO 2008040050 A1	10 Apr 2008

Due to data integration issues this family listing may not include 10 digit Australian applications filed since May 2001.

INTERNATIONAL SEARCH REPORT Information on patent family members	International application No. **PCT/AU2018/051382**

This Annex lists known patent family members relating to the patent documents cited in the above-mentioned international search report. The Australian Patent Office is in no way liable for these particulars which are merely given for the purpose of information.

Patent Document/s Cited in Search Report		**Patent Family Member/s**	
Publication Number	**Publication Date**	**Publication Number**	**Publication Date**
WO 2014/183167 A1	20 November 2014	WO 2014183167 A1	20 Nov 2014
		AU 2013296145 A1	12 Feb 2015
		AU 2013296145 B2	17 Dec 2015
		AU 2014207243 A1	28 May 2015
		AU 2014207243 B2	23 Feb 2017
		AU 2014207247 A1	09 Apr 2015
		AU 2014207247 B2	02 Mar 2017
		AU 2014252758 A1	01 Oct 2015
		AU 2014252758 B2	15 Jun 2017
		AU 2014268127 A1	29 Oct 2015
		AU 2015264928 A1	24 Dec 2015
		AU 2015264928 B2	23 Mar 2017
		AU 2017201346 A1	16 Mar 2017
		AU 2017201346 B2	26 Jul 2018
		AU 2017203609 A1	15 Jun 2017
		BR 112015001899 A2	04 Jul 2017
		CA 2880224 A1	30 Jan 2014
		CN 105120935 A	02 Dec 2015
		CN 105120935 B	27 Oct 2017
		CN 105307714 A	03 Feb 2016
		CN 105307714 B	09 Oct 2018
		CN 105377348 A	02 Mar 2016
		CN 105377348 B	23 Nov 2018
		CN 105792874 A	20 Jul 2016
		CN 105792874 B	12 Jun 2018
		CN 106029144 A	12 Oct 2016
		CN 106029144 B	12 Jun 2018
		CN 106912194 A	30 Jun 2017
		CN 108310578 A	24 Jul 2018
		CN 108434575 A	24 Aug 2018
		CN 109091739 A	28 Dec 2018
		CN 109621142 A	16 Apr 2019
		EP 2877225 A1	03 Jun 2015
		EP 2877225 B1	26 Dec 2018
		EP 2945678 A1	25 Nov 2015

Due to data integration issues this family listing may not include 10 digit Australian applications filed since May 2001.

INTERNATIONAL SEARCH REPORT Information on patent family members	International application No. **PCT/AU2018/051382**

This Annex lists known patent family members relating to the patent documents cited in the above-mentioned international search report. The Australian Patent Office is in no way liable for these particulars which are merely given for the purpose of information.

Patent Document/s Cited in Search Report		Patent Family Member/s	
Publication Number	**Publication Date**	**Publication Number**	**Publication Date**
		EP 2945680 A1	25 Nov 2015
		EP 2983775 A1	17 Feb 2016
		EP 2996752 A1	23 Mar 2016
		EP 2996752 B1	13 Feb 2019
		EP 3071276 A1	28 Sep 2016
		EP 3348299 A1	18 Jul 2018
		JP 2016518207 A	23 Jun 2016
		JP 6416223 B2	31 Oct 2018
		JP 2016514578 A	23 May 2016
		JP 6424206 B2	14 Nov 2018
		JP 2016503699 A	08 Feb 2016
		JP 6474733 B2	27 Feb 2019
		JP 2015522381 A	06 Aug 2015
		JP 2016503700 A	08 Feb 2016
		JP 2016538049 A	08 Dec 2016
		JP 2018167042 A	01 Nov 2018
		JP 2018202210 A	27 Dec 2018
		JP 2019013791 A	31 Jan 2019
		JP 2019030709 A	28 Feb 2019
		KR 20150038230 A	08 Apr 2015
		MX 2015001274 A	22 Jan 2016
		NZ 623462 A	26 Feb 2016
		NZ 630588 A	24 Feb 2017
		NZ 630702 A	24 Feb 2017
		NZ 630709 A	23 Dec 2016
		NZ 631020 A	30 Jun 2017
		NZ 714593 A	25 Aug 2017
		RU 2015105510 A	20 Sep 2016
		SG 11201500606U A	27 Feb 2015
		TW 201412351 A	01 Apr 2014
		TW I586387 B	11 Jun 2017
		TW 201438777 A	16 Oct 2014
		TW I604862 B	11 Nov 2017
		TW 201440826 A	01 Nov 2014
		TW I626960 B	21 Jun 2018
		TW 201529111 A	01 Aug 2015

Due to data integration issues this family listing may not include 10 digit Australian applications filed since May 2001.

INTERNATIONAL SEARCH REPORT Information on patent family members	International application No. **PCT/AU2018/051382**

This Annex lists known patent family members relating to the patent documents cited in the above-mentioned international search report. The Australian Patent Office is in no way liable for these particulars which are merely given for the purpose of information.

Patent Document/s Cited in Search Report		Patent Family Member/s	
Publication Number	**Publication Date**	**Publication Number**	**Publication Date**
		TW 201529112 A	01 Aug 2015
		TW 201742647 A	16 Dec 2017
		US 2015217074 A1	06 Aug 2015
		US 9889267 B2	13 Feb 2018
		US 2014026890 A1	30 Jan 2014
		US 9974915 B2	22 May 2018
		US 2015352306 A1	10 Dec 2015
		US 2015352308 A1	10 Dec 2015
		US 2016045700 A1	18 Feb 2016
		US 2016082214 A1	24 Mar 2016
		US 2016296720 A1	13 Oct 2016
		US 2018140795 A1	24 May 2018
		US 2018250488 A1	06 Sep 2018
		WO 2014015382 A1	30 Jan 2014
		WO 2014110622 A1	24 Jul 2014
		WO 2014110626 A1	24 Jul 2014
		WO 2014165906 A1	16 Oct 2014
		WO 2015070289 A1	21 May 2015

Due to data integration issues this family listing may not include 10 digit Australian applications filed since May 2001.

INTERNATIONAL SEARCH REPORT Information on patent family members	International application No. **PCT/AU2018/051382**

This Annex lists known patent family members relating to the patent documents cited in the above-mentioned international search report. The Australian Patent Office is in no way liable for these particulars which are merely given for the purpose of information.

Patent Document/s Cited in Search Report		**Patent Family Member/s**	
Publication Number	**Publication Date**	**Publication Number**	**Publication Date**
WO 2017/049357 A1	30 March 2017	WO 2017049357 A1	30 Mar 2017
		CN 108348723 A	31 Jul 2018
		EP 3352829 A1	01 Aug 2018
		JP 2018527153 A	20 Sep 2018
		US 2018236200 A1	23 Aug 2018
WO 2013/006899 A1	17 January 2013	WO 2013006899 A1	17 Jan 2013
		AU 2012283744 A1	09 Jan 2014
		AU 2012283744 B2	02 Jul 2015
		AU 2013262459 A1	27 Nov 2014
		CN 103764213 A	30 Apr 2014
		CN 103764213 B	26 Sep 2017
		CN 104487122 A	01 Apr 2015
		CN 107865995 A	03 Apr 2018
		CN 108211073 A	29 Jun 2018
		EP 2729208 A1	14 May 2014
		EP 2729208 B1	18 Oct 2017
		EP 2877224 A1	03 Jun 2015
		EP 3281665 A1	14 Feb 2018
		JP 2014520576 A	25 Aug 2014
		JP 6333172 B2	30 May 2018
		JP 2015516241 A	11 Jun 2015
		JP 2017159081 A	14 Sep 2017
		JP 2018108511 A	12 Jul 2018
		NZ 619618 A	28 Aug 2015
		NZ 630695 A	30 Jun 2017
		NZ 710684 A	24 Feb 2017
		US 2014150798 A1	05 Jun 2014
		US 2015151071 A1	04 Jun 2015
		WO 2013170290 A1	21 Nov 2013
WO 2016/193859 A1	08 December 2016	WO 2016193859 A1	08 Dec 2016
		US 2018099113 A1	12 Apr 2018
WO 2017/124152 A1	27 July 2017	WO 2017124152 A1	27 Jul 2017
		CN 109152903 A	04 Jan 2019
		EP 3405244 A1	28 Nov 2018

Due to data integration issues this family listing may not include 10 digit Australian applications filed since May 2001.

INTERNATIONAL SEARCH REPORT Information on patent family members	International application No. **PCT/AU2018/051382**

This Annex lists known patent family members relating to the patent documents cited in the above-mentioned international search report. The Australian Patent Office is in no way liable for these particulars which are merely given for the purpose of information.

Patent Document/s Cited in Search Report		Patent Family Member/s	
Publication Number	**Publication Date**	**Publication Number**	**Publication Date**
		JP 2019502492 A	31 Jan 2019
		US 2019022343 A1	24 Jan 2019
		WO 2017124155 A1	27 Jul 2017

Due to data integration issues this family listing may not include 10 digit Australian applications filed since May 2001.

INTERNATIONAL SEARCH REPORT Information on patent family members	International application No. **PCT/AU2018/051382**

This Annex lists known patent family members relating to the patent documents cited in the above-mentioned international search report. The Australian Patent Office is in no way liable for these particulars which are merely given for the purpose of information.

Patent Document/s Cited in Search Report		**Patent Family Member/s**	
Publication Number	**Publication Date**	**Publication Number**	**Publication Date**
WO 2008/070929 A1	19 June 2008	WO 2008070929 A1	19 Jun 2008
		AU 2007278766 A1	31 Jan 2008
		AU 2007278766 B2	05 Dec 2013
		AU 2008316306 A1	30 Apr 2009
		AU 2008316306 B2	12 Feb 2015
		CN 101495170 A	29 Jul 2009
		CN 101495170 B	29 May 2013
		CN 101516427 A	26 Aug 2009
		CN 101516427 B	08 Aug 2012
		CN 101687085 A	31 Mar 2010
		CN 101687085 B	21 Aug 2013
		CN 101951984 A	19 Jan 2011
		CN 101951984 B	11 Feb 2015
		CN 102698349 A	03 Oct 2012
		CN 102698349 B	25 May 2016
		CN 103252008 A	21 Aug 2013
		CN 103252008 B	26 Apr 2017
		CN 103418070 A	04 Dec 2013
		CN 103418070 B	01 Mar 2017
		CN 103638586 A	19 Mar 2014
		CN 103638586 B	30 Jun 2017
		CN 104606759 A	13 May 2015
		CN 104606759 B	15 Jun 2018
		CN 108714266 A	30 Oct 2018
		EP 2046430 A1	15 Apr 2009
		EP 2046430 B1	20 Apr 2016
		EP 2051760 A1	29 Apr 2009
		EP 2051760 B1	12 Mar 2014
		EP 2083897 A1	05 Aug 2009
		EP 2083897 B1	13 Apr 2016
		EP 2101855 A1	23 Sep 2009
		EP 2101855 B1	21 Aug 2013
		EP 2425868 A1	07 Mar 2012
		EP 2425868 B1	19 Nov 2014
		EP 2428240 A1	14 Mar 2012

Due to data integration issues this family listing may not include 10 digit Australian applications filed since May 2001.

INTERNATIONAL SEARCH REPORT Information on patent family members	International application No. **PCT/AU2018/051382**

This Annex lists known patent family members relating to the patent documents cited in the above-mentioned international search report. The Australian Patent Office is in no way liable for these particulars which are merely given for the purpose of information.

Patent Document/s Cited in Search Report		Patent Family Member/s	
Publication Number	**Publication Date**	**Publication Number**	**Publication Date**
		EP 2428240 B1	17 Feb 2016
		EP 2428241 A1	14 Mar 2012
		EP 2428241 B1	06 Jul 2016
		EP 2481434 A2	01 Aug 2012
		EP 2481434 B1	13 Apr 2016
		EP 2481435 A2	01 Aug 2012
		EP 2481435 B1	24 Feb 2016
		EP 3053621 A1	10 Aug 2016
		EP 3111980 A2	04 Jan 2017
		EP 3130371 A1	15 Feb 2017
		JP 2011500229 A	06 Jan 2011
		JP 5650535 B2	07 Jan 2015
		JP 2013176631 A	09 Sep 2013
		JP 5871859 B2	01 Mar 2016
		JP 2014205066 A	30 Oct 2014
		JP 5905930 B2	20 Apr 2016
		JP 2010512193 A	22 Apr 2010
		JP 5911189 B2	27 Apr 2016
		JP 2013230397 A	14 Nov 2013
		JP 5922625 B2	24 May 2016
		JP 2015027618 A	12 Feb 2015
		JP 6084194 B2	22 Feb 2017
		JP 2014014718 A	30 Jan 2014
		JP 6185364 B2	23 Aug 2017
		JP 2013223805 A	31 Oct 2013
		JP 6204105 B2	27 Sep 2017
		JP 2014240024 A	25 Dec 2014
		JP 6316721 B2	25 Apr 2018
		JP 2017099948 A	08 Jun 2017
		JP 6356289 B2	11 Jul 2018
		JP 2017023803 A	02 Feb 2017
		JP 6476157 B2	27 Feb 2019
		JP 2009544371 A	17 Dec 2009
		JP 2009544372 A	17 Dec 2009
		JP 2016209698 A	15 Dec 2016
		JP 2018138231 A	06 Sep 2018

Due to data integration issues this family listing may not include 10 digit Australian applications filed since May 2001.

INTERNATIONAL SEARCH REPORT Information on patent family members	International application No. **PCT/AU2018/051382**

This Annex lists known patent family members relating to the patent documents cited in the above-mentioned international search report. The Australian Patent Office is in no way liable for these particulars which are merely given for the purpose of information.

Patent Document/s Cited in Search Report		Patent Family Member/s	
Publication Number	**Publication Date**	**Publication Number**	**Publication Date**
		JP 2018171539 A	08 Nov 2018
		NZ 567432 A	30 Mar 2012
		NZ 575405 A	28 Sep 2012
		NZ 584110 A	25 Jan 2013
		NZ 596570 A	28 Feb 2014
		NZ 596802 A	28 Feb 2014
		NZ 599372 A	25 Oct 2013
		NZ 603621 A	30 May 2014
		NZ 610731 A	27 Feb 2015
		NZ 610755 A	27 Mar 2015
		NZ 612086 A	24 Dec 2014
		NZ 615330 A	27 Mar 2015
		NZ 624390 A	27 Nov 2015
		NZ 701722 A	29 Jul 2016
		NZ 702644 A	24 Jun 2016
		NZ 713180 A	28 Apr 2017
		NZ 720629 A	22 Dec 2017
		NZ 721025 A	26 Jan 2018
		US 2008060649 A1	13 Mar 2008
		US 8297285 B2	30 Oct 2012
		US 2012132209 A1	31 May 2012
		US 8573201 B2	05 Nov 2013
		US 2010307502 A1	09 Dec 2010
		US 8636007 B2	28 Jan 2014
		US 2008047560 A1	28 Feb 2008
		US 9162034 B2	20 Oct 2015
		US 2015209539 A1	30 Jul 2015
		US 9526857 B2	27 Dec 2016
		US 2009223518 A1	10 Sep 2009
		US 9827391 B2	28 Nov 2017
		US 2009217929 A1	03 Sep 2009
		US 9937312 B2	10 Apr 2018
		US 2010018534 A1	28 Jan 2010
		US 10166357 B2	01 Jan 2019
		US 2010229868 A1	16 Sep 2010
		US 2014053844 A1	27 Feb 2014

Due to data integration issues this family listing may not include 10 digit Australian applications filed since May 2001.

INTERNATIONAL SEARCH REPORT Information on patent family members	International application No. **PCT/AU2018/051382**

This Annex lists known patent family members relating to the patent documents cited in the above-mentioned international search report. The Australian Patent Office is in no way liable for these particulars which are merely given for the purpose of information.

Patent Document/s Cited in Search Report		Patent Family Member/s	
Publication Number	**Publication Date**	**Publication Number**	**Publication Date**
		US 2017065787 A1	09 Mar 2017
		US 2017312465 A1	02 Nov 2017
		US 2018001046 A1	04 Jan 2018
		US 2018064897 A1	08 Mar 2018
		US 2019111227 A1	18 Apr 2019
		WO 2008011682 A1	31 Jan 2008
		WO 2008011683 A1	31 Jan 2008
		WO 2009052560 A1	30 Apr 2009
		WO 2011014931 A1	10 Feb 2011

Due to data integration issues this family listing may not include 10 digit Australian applications filed since May 2001.

INTERNATIONAL SEARCH REPORT Information on patent family members	International application No. **PCT/AU2018/051382**

This Annex lists known patent family members relating to the patent documents cited in the above-mentioned international search report. The Australian Patent Office is in no way liable for these particulars which are merely given for the purpose of information.

Patent Document/s Cited in Search Report		**Patent Family Member/s**	
Publication Number	**Publication Date**	**Publication Number**	**Publication Date**
WO 2012/040791 A1	05 April 2012	WO 2012040791 A1	05 Apr 2012
		AU 2011308094 A1	21 Feb 2013
		AU 2011308094 B2	01 May 2014
		AU 2011308095 A1	21 Mar 2013
		AU 2011308095 B2	09 Oct 2014
		AU 2014224136 A1	02 Oct 2014
		AU 2014224136 B2	14 Apr 2016
		CN 103153378 A	12 Jun 2013
		CN 103153378 B	09 Nov 2016
		CN 103153379 A	12 Jun 2013
		CN 103153379 B	03 Aug 2016
		CN 105396207 A	16 Mar 2016
		EP 2621572 A1	07 Aug 2013
		EP 2621573 A1	07 Aug 2013
		EP 2621573 B1	21 Dec 2016
		EP 3231470 A1	18 Oct 2017
		JP 2013538632 A	17 Oct 2013
		JP 6046626 B2	21 Dec 2016
		JP 2013538631 A	17 Oct 2013
		JP 6096662 B2	15 Mar 2017
		JP 2016025939 A	12 Feb 2016
		JP 6120026 B2	26 Apr 2017
		NZ 607679 A	25 Jul 2014
		NZ 607879 A	28 Nov 2014
		NZ 625429 A	24 Dec 2015
		NZ 701074 A	30 Oct 2015
		NZ 701501 A	30 Oct 2015
		NZ 713055 A	28 Apr 2017
		NZ 713455 A	28 Apr 2017
		US 2013213400 A1	22 Aug 2013
		US 9010330 B2	21 Apr 2015
		US 2013199537 A1	08 Aug 2013
		US 9737678 B2	22 Aug 2017
		US 2015190602 A1	09 Jul 2015
		US 10052448 B2	21 Aug 2018

Due to data integration issues this family listing may not include 10 digit Australian applications filed since May 2001.

INTERNATIONAL SEARCH REPORT Information on patent family members	International application No. **PCT/AU2018/051382**

This Annex lists known patent family members relating to the patent documents cited in the above-mentioned international search report. The Australian Patent Office is in no way liable for these particulars which are merely given for the purpose of information.

Patent Document/s Cited in Search Report		Patent Family Member/s	
Publication Number	**Publication Date**	**Publication Number**	**Publication Date**
		US 2017312468 A1	02 Nov 2017
		US 2018318540 A1	08 Nov 2018
		US 2019091430 A1	28 Mar 2019
		US 2019091431 A1	28 Mar 2019
		US 2019091432 A1	28 Mar 2019
		US 2019091433 A1	28 Mar 2019
		WO 2012040792 A1	05 Apr 2012

Due to data integration issues this family listing may not include 10 digit Australian applications filed since May 2001.

INTERNATIONAL SEARCH REPORT Information on patent family members	International application No. **PCT/AU2018/051382**

This Annex lists known patent family members relating to the patent documents cited in the above-mentioned international search report. The Australian Patent Office is in no way liable for these particulars which are merely given for the purpose of information.

Patent Document/s Cited in Search Report		**Patent Family Member/s**	
Publication Number	**Publication Date**	**Publication Number**	**Publication Date**
WO 2017/049358 A1	30 March 2017	WO 2017049358 A1	30 Mar 2017
		AU 2017329112 A1	28 Mar 2019
		CN 108136150 A	08 Jun 2018
		EP 3352830 A1	01 Aug 2018
		JP 2018531124 A	25 Oct 2018
		US 2018264222 A1	20 Sep 2018
		WO 2018053589 A1	29 Mar 2018
		WO 2018126295 A1	12 Jul 2018
US 2009/0050156 A1	26 February 2009	US 2009050156 A1	26 Feb 2009
		US 8397727 B2	19 Mar 2013
		CN 101380497 A	11 Mar 2009
		CN 101380497 B	29 May 2013
		EP 2027880 A1	25 Feb 2009
		EP 2027880 B1	01 Nov 2017
		EP 2420281 A1	22 Feb 2012
		JP 2013116409 A	13 Jun 2013
		JP 5596198 B2	24 Sep 2014
		JP 2014208306 A	06 Nov 2014
		JP 6210950 B2	11 Oct 2017
		JP 2009050707 A	12 Mar 2009
		NZ 570796 A	29 Oct 2010
		NZ 582439 A	29 Jul 2011
		NZ 591309 A	31 Aug 2012
		NZ 599608 A	29 Nov 2013
		NZ 610424 A	31 Oct 2014
		NZ 701093 A	29 Apr 2016
		US 2013160769 A1	27 Jun 2013
		US 8851075 B2	07 Oct 2014
		US 2014366882 A1	18 Dec 2014
		US 2017291004 A1	12 Oct 2017
		US 2018104431 A1	19 Apr 2018
WO 2015/048849 A1	09 April 2015	WO 2015048849 A1	09 Apr 2015
		NZ 631446 A	27 May 2016
		NZ 718810 A	27 Oct 2017
		TW 201513904 A	16 Apr 2015

Due to data integration issues this family listing may not include 10 digit Australian applications filed since May 2001.

INTERNATIONAL SEARCH REPORT Information on patent family members	International application No. **PCT/AU2018/051382**

This Annex lists known patent family members relating to the patent documents cited in the above-mentioned international search report. The Australian Patent Office is in no way liable for these particulars which are merely given for the purpose of information.

Patent Document/s Cited in Search Report		Patent Family Member/s	
Publication Number	**Publication Date**	**Publication Number**	**Publication Date**
		US 2016271351 A1	22 Sep 2016

Due to data integration issues this family listing may not include 10 digit Australian applications filed since May 2001.

INTERNATIONAL SEARCH REPORT Information on patent family members	International application No. **PCT/AU2018/051382**

This Annex lists known patent family members relating to the patent documents cited in the above-mentioned international search report. The Australian Patent Office is in no way liable for these particulars which are merely given for the purpose of information.

Patent Document/s Cited in Search Report		**Patent Family Member/s**	
Publication Number	**Publication Date**	**Publication Number**	**Publication Date**
WO 2004/096332 A1	11 November 2004	WO 2004096332 A1	11 Nov 2004
		AU 2004234183 A1	11 Nov 2004
		AU 2004234183 B2	20 Jan 2011
		CN 1784250 A	07 Jun 2006
		CN 101987221 A	23 Mar 2011
		CN 101987221 B	04 Sep 2013
		EP 1624919 A1	15 Feb 2006
		EP 1624919 B1	29 Jan 2014
		EP 2514471 A2	24 Oct 2012
		EP 2514471 B1	13 Jan 2016
		EP 2522383 A1	14 Nov 2012
		EP 2522383 B1	30 Aug 2017
		EP 3308818 A1	18 Apr 2018
		JP 2006525040 A	09 Nov 2006
		JP 4734229 B2	27 Jul 2011
		JP 2011041850 A	03 Mar 2011
		JP 5453225 B2	26 Mar 2014
		JP 2013006107 A	10 Jan 2013
		JP 5604493 B2	08 Oct 2014
		JP 2014064952 A	17 Apr 2014
		JP 5809298 B2	10 Nov 2015
		JP 2015091519 A	14 May 2015
		JP 6456715 B2	23 Jan 2019
		JP 2017060882 A	30 Mar 2017
		JP 6469735 B2	13 Feb 2019
		NZ 578600 A	25 Feb 2011
		NZ 588137 A	24 Feb 2012
		US 2006201514 A1	14 Sep 2006
		US 7861715 B2	04 Jan 2011
		US 2011030692 A1	10 Feb 2011
		US 8505535 B2	13 Aug 2013
		US 2013312758 A1	28 Nov 2013
		US 9895503 B2	20 Feb 2018
		US 2018140791 A1	24 May 2018
US 2009/0223521 A1	10 September 2009	US 2009223521 A1	10 Sep 2009

Due to data integration issues this family listing may not include 10 digit Australian applications filed since May 2001.

INTERNATIONAL SEARCH REPORT Information on patent family members	International application No. **PCT/AU2018/051382**

This Annex lists known patent family members relating to the patent documents cited in the above-mentioned international search report. The Australian Patent Office is in no way liable for these particulars which are merely given for the purpose of information.

Patent Document/s Cited in Search Report		Patent Family Member/s	
Publication Number	**Publication Date**	**Publication Number**	**Publication Date**
		US 8950403 B2	10 Feb 2015
		US 2015075533 A1	19 Mar 2015
		US 9849261 B2	26 Dec 2017
		US 2018071475 A1	15 Mar 2018

Due to data integration issues this family listing may not include 10 digit Australian applications filed since May 2001.

INTERNATIONAL SEARCH REPORT Information on patent family members	International application No. **PCT/AU2018/051382**

This Annex lists known patent family members relating to the patent documents cited in the above-mentioned international search report. The Australian Patent Office is in no way liable for these particulars which are merely given for the purpose of information.

Patent Document/s Cited in Search Report		Patent Family Member/s	
Publication Number	**Publication Date**	**Publication Number**	**Publication Date**
WO 2007/045008 A1	26 April 2007	WO 2007045008 A1	26 Apr 2007
		EP 1937345 A1	02 Jul 2008
		NZ 567372 A	30 Jun 2011
		US 2009065729 A1	12 Mar 2009
		US 9295805 B2	29 Mar 2016
WO 2007/009182 A1	25 January 2007	WO 2007009182 A1	25 Jan 2007
		AU 2006271933 A1	25 Jan 2007
		AU 2006271933 B2	03 May 2012
		AU 2006272456 A1	25 Jan 2007
		CN 101227947 A	23 Jul 2008
		CN 101227947 B	13 Apr 2011
		CN 101228017 A	23 Jul 2008
		CN 102151350 A	17 Aug 2011
		CN 102921086 A	13 Feb 2013
		CN 102921086 B	18 Nov 2015
		CN 102940926 A	27 Feb 2013
		CN 102940926 B	21 Oct 2015
		DE 102005033648 A1	25 Jan 2007
		DE 102005033650 A1	25 Jan 2007
		EP 1909876 A1	16 Apr 2008
		EP 1909876 B1	14 Dec 2016
		EP 1910053 A1	16 Apr 2008
		EP 1910053 B1	27 Apr 2016
		JP 2009501582 A	22 Jan 2009
		JP 4989646 B2	01 Aug 2012
		JP 2009501577 A	22 Jan 2009
		JP 5460052 B2	02 Apr 2014
		NZ 564493 A	28 Jan 2011
		NZ 564890 A	28 Jan 2011
		US 2009032024 A1	05 Feb 2009
		US 8596273 B2	03 Dec 2013
		US 2009078267 A1	26 Mar 2009
		US 8684003 B2	01 Apr 2014
		US 2014224254 A1	14 Aug 2014
		US 9078988 B2	14 Jul 2015

Due to data integration issues this family listing may not include 10 digit Australian applications filed since May 2001.

INTERNATIONAL SEARCH REPORT Information on patent family members	International application No. **PCT/AU2018/051382**

This Annex lists known patent family members relating to the patent documents cited in the above-mentioned international search report. The Australian Patent Office is in no way liable for these particulars which are merely given for the purpose of information.

Patent Document/s Cited in Search Report		Patent Family Member/s	
Publication Number	**Publication Date**	**Publication Number**	**Publication Date**
		US 2015306331 A1	29 Oct 2015
		US 10213569 B2	26 Feb 2019
		US 2014083431 A1	27 Mar 2014
		WO 2007009782 A1	25 Jan 2007

Due to data integration issues this family listing may not include 10 digit Australian applications filed since May 2001.

INTERNATIONAL SEARCH REPORT Information on patent family members	International application No. **PCT/AU2018/051382**

This Annex lists known patent family members relating to the patent documents cited in the above-mentioned international search report. The Australian Patent Office is in no way liable for these particulars which are merely given for the purpose of information.

Patent Document/s Cited in Search Report		Patent Family Member/s	
Publication Number	**Publication Date**	**Publication Number**	**Publication Date**
WO 2017/049356 A1	30 March 2017	WO 2017049356 A1	30 Mar 2017
		CN 108348722 A	31 Jul 2018
		EP 3352825 A1	01 Aug 2018
		JP 2018527152 A	20 Sep 2018
		US 2018250486 A1	06 Sep 2018
WO 2014/110622 A1	24 July 2014	WO 2014110622 A1	24 Jul 2014
		AU 2013296145 A1	12 Feb 2015
		AU 2013296145 B2	17 Dec 2015
		AU 2014207243 A1	28 May 2015
		AU 2014207243 B2	23 Feb 2017
		AU 2014207247 A1	09 Apr 2015
		AU 2014207247 B2	02 Mar 2017
		AU 2014252758 A1	01 Oct 2015
		AU 2014252758 B2	15 Jun 2017
		AU 2014268127 A1	29 Oct 2015
		AU 2015264928 A1	24 Dec 2015
		AU 2015264928 B2	23 Mar 2017
		AU 2017201346 A1	16 Mar 2017
		AU 2017201346 B2	26 Jul 2018
		AU 2017203609 A1	15 Jun 2017
		BR 112015001899 A2	04 Jul 2017
		CA 2880224 A1	30 Jan 2014
		CN 105120935 A	02 Dec 2015
		CN 105120935 B	27 Oct 2017
		CN 105307714 A	03 Feb 2016
		CN 105307714 B	09 Oct 2018
		CN 105377348 A	02 Mar 2016
		CN 105377348 B	23 Nov 2018
		CN 105792874 A	20 Jul 2016
		CN 105792874 B	12 Jun 2018
		CN 106029144 A	12 Oct 2016
		CN 106029144 B	12 Jun 2018
		CN 106912194 A	30 Jun 2017
		CN 108310578 A	24 Jul 2018
		CN 108434575 A	24 Aug 2018

Due to data integration issues this family listing may not include 10 digit Australian applications filed since May 2001.

INTERNATIONAL SEARCH REPORT Information on patent family members	International application No. **PCT/AU2018/051382**

This Annex lists known patent family members relating to the patent documents cited in the above-mentioned international search report. The Australian Patent Office is in no way liable for these particulars which are merely given for the purpose of information.

Patent Document/s Cited in Search Report		Patent Family Member/s	
Publication Number	**Publication Date**	**Publication Number**	**Publication Date**
		CN 109091739 A	28 Dec 2018
		CN 109621142 A	16 Apr 2019
		EP 2877225 A1	03 Jun 2015
		EP 2877225 B1	26 Dec 2018
		EP 2945678 A1	25 Nov 2015
		EP 2945680 A1	25 Nov 2015
		EP 2983775 A1	17 Feb 2016
		EP 2996752 A1	23 Mar 2016
		EP 2996752 B1	13 Feb 2019
		EP 3071276 A1	28 Sep 2016
		EP 3348299 A1	18 Jul 2018
		JP 2016518207 A	23 Jun 2016
		JP 6416223 B2	31 Oct 2018
		JP 2016514578 A	23 May 2016
		JP 6424206 B2	14 Nov 2018
		JP 2016503699 A	08 Feb 2016
		JP 6474733 B2	27 Feb 2019
		JP 2015522381 A	06 Aug 2015
		JP 2016503700 A	08 Feb 2016
		JP 2016538049 A	08 Dec 2016
		JP 2018167042 A	01 Nov 2018
		JP 2018202210 A	27 Dec 2018
		JP 2019013791 A	31 Jan 2019
		JP 2019030709 A	28 Feb 2019
		KR 20150038230 A	08 Apr 2015
		MX 2015001274 A	22 Jan 2016
		NZ 623462 A	26 Feb 2016
		NZ 630588 A	24 Feb 2017
		NZ 630702 A	24 Feb 2017
		NZ 630709 A	23 Dec 2016
		NZ 631020 A	30 Jun 2017
		NZ 714593 A	25 Aug 2017
		RU 2015105510 A	20 Sep 2016
		SG 11201500606U A	27 Feb 2015
		TW 201412351 A	01 Apr 2014
		TW I586387 B	11 Jun 2017

Due to data integration issues this family listing may not include 10 digit Australian applications filed since May 2001.

INTERNATIONAL SEARCH REPORT Information on patent family members	International application No. **PCT/AU2018/051382**

This Annex lists known patent family members relating to the patent documents cited in the above-mentioned international search report. The Australian Patent Office is in no way liable for these particulars which are merely given for the purpose of information.

Patent Document/s Cited in Search Report		Patent Family Member/s	
Publication Number	**Publication Date**	**Publication Number**	**Publication Date**
		TW 201438777 A	16 Oct 2014
		TW I604862 B	11 Nov 2017
		TW 201440826 A	01 Nov 2014
		TW I626960 B	21 Jun 2018
		TW 201529111 A	01 Aug 2015
		TW 201529112 A	01 Aug 2015
		TW 201742647 A	16 Dec 2017
		US 2015217074 A1	06 Aug 2015
		US 9889267 B2	13 Feb 2018
		US 2014026890 A1	30 Jan 2014
		US 9974915 B2	22 May 2018
		US 2015352306 A1	10 Dec 2015
		US 2015352308 A1	10 Dec 2015
		US 2016045700 A1	18 Feb 2016
		US 2016082214 A1	24 Mar 2016
		US 2016296720 A1	13 Oct 2016
		US 2018140795 A1	24 May 2018
		US 2018250488 A1	06 Sep 2018
		WO 2014015382 A1	30 Jan 2014
		WO 2014110626 A1	24 Jul 2014
		WO 2014165906 A1	16 Oct 2014
		WO 2014183167 A1	20 Nov 2014
		WO 2015070289 A1	21 May 2015

Due to data integration issues this family listing may not include 10 digit Australian applications filed since May 2001.

INTERNATIONAL SEARCH REPORT Information on patent family members	International application No. **PCT/AU2018/051382**

This Annex lists known patent family members relating to the patent documents cited in the above-mentioned international search report. The Australian Patent Office is in no way liable for these particulars which are merely given for the purpose of information.

Patent Document/s Cited in Search Report		**Patent Family Member/s**	
Publication Number	**Publication Date**	**Publication Number**	**Publication Date**
WO 2017/120643 A1	20 July 2017	WO 2017120643 A1	20 Jul 2017
		CN 108463264 A	28 Aug 2018
		EP 3402560 A1	21 Nov 2018
		JP 2019501734 A	24 Jan 2019
		US 2018318539 A1	08 Nov 2018
EP 3254720 A1	13 December 2017	EP 3254720 A1	13 Dec 2017
		CN 104623784 A	20 May 2015
		CN 104623784 B	12 Jun 2018
		WO 2016124109 A1	11 Aug 2016
WO 2013/068911 A1	16 May 2013	WO 2013068911 A1	16 May 2013
		CN 103930149 A	16 Jul 2014
		CN 103930149 B	17 Aug 2016
		EP 2747819 A1	02 Jul 2014
		EP 2747819 B1	04 Oct 2017
		US 2014305433 A1	16 Oct 2014
		US 9687620 B2	27 Jun 2017
US 2016/0144146 A1	26 May 2016	US 2016144146 A1	26 May 2016
		AU 2015318728 A1	02 Mar 2017
		BR 112017004877 A2	12 Dec 2017
		CA 2958120 A1	24 Mar 2016
		CN 107197624 A	22 Sep 2017
		EP 3193993 A1	26 Jul 2017
		GB 2557693 A	27 Jun 2018
		JP 2017531464 A	26 Oct 2017
		SG 11201701205T A	27 Apr 2017
		TW 201628517 A	16 Aug 2016
		US 2016074614 A1	17 Mar 2016
		US 2017274167 A1	28 Sep 2017
		WO 2016043603 A1	24 Mar 2016

End of Annex

Due to data integration issues this family listing may not include 10 digit Australian applications filed since May 2001.