PCT WORLD INTELLECTUAL PROPERTY ORGANIZATION
International Bureau

INTERNATIONAL APPLICATION PUBLISHED UNDER THE PATENT COOPERATION TREATY (PCT)

(51) International Patent Classification 6 : F28D 17/00	A1	(11) International Publication Number: WO 98/11397
		(43) International Publication Date: 19 March 1998 (19.03.98)

(21) International Application Number: PCT/US97/07219

(22) International Filing Date: 28 April 1997 (28.04.97)

(30) Priority Data:
08/710,185 12 September 1996 (12.09.96) US

(60) Parent Application or Grant
(63) Related by Continuation
US 08/710,185 (CIP)
Filed on 12 September 1996 (12.09.96)

(71) Applicant *(for all designated States except US)*: JARO TECHNOLOGIES, INC. [US/US]; Suite 815, 8626 Tesoro Drive, San Antonio, TX 78217 (US).

(72) Inventors; and
(75) Inventors/Applicants *(for US only)*: POCOL, Marius [RO/RO]; Suite 815, 8626 Tesoro Drive, San Antonio, TX 78217 (US). PANDURU, Constantin [RO/RO]; Suite 815, 8626 Tesoro Drive, San Antonio, TX 78217 (US).

(74) Agent: KAMMER, Mark, A.; Gunn, Lee & Miller, P.C., Suite 1650, 300 Convent, San Antonio, TX 78205 (US).

(81) Designated States: AL, AM, AT, AU, AZ, BA, BB, BG, BR, BY, CA, CH, CN, CU, CZ, DE, DK, EE, ES, FI, GB, GE, GH, HU, IL, IS, JP, KE, KG, KP, KR, KZ, LC, LK, LR, LS, LT, LU, LV, MD, MG, MK, MN, MW, MX, NO, NZ, PL, PT, RO, RU, SD, SE, SG, SI, SK, TJ, TM, TR, TT, UA, UG, US, UZ, VN, YU, ARIPO patent (GH, KE, LS, MW, SD, SZ, UG), Eurasian patent (AM, AZ, BY, KG, KZ, MD, RU, TJ, TM), European patent (AT, BE, CH, DE, DK, ES, FI, FR, GB, GR, IE, IT, LU, MC, NL, PT, SE), OAPI patent (BF, BJ, CF, CG, CI, CM, GA, GN, ML, MR, NE, SN, TD, TG).

Published
With international search report.

(54) Title: RECHARGEABLE THERMAL BATTERY FOR LATENT ENERGY STORAGE AND TRANSFER

(57) Abstract

A thermal energy storage and transfer device (80) that includes a thermal reservoir (88) maintained about its freezing or melting point temperature for storing a quantity of latent thermal energy, a thermal conductor (86) between the reservoir (88) and an external substance (82) and a means (84) for recharging the reservoir.

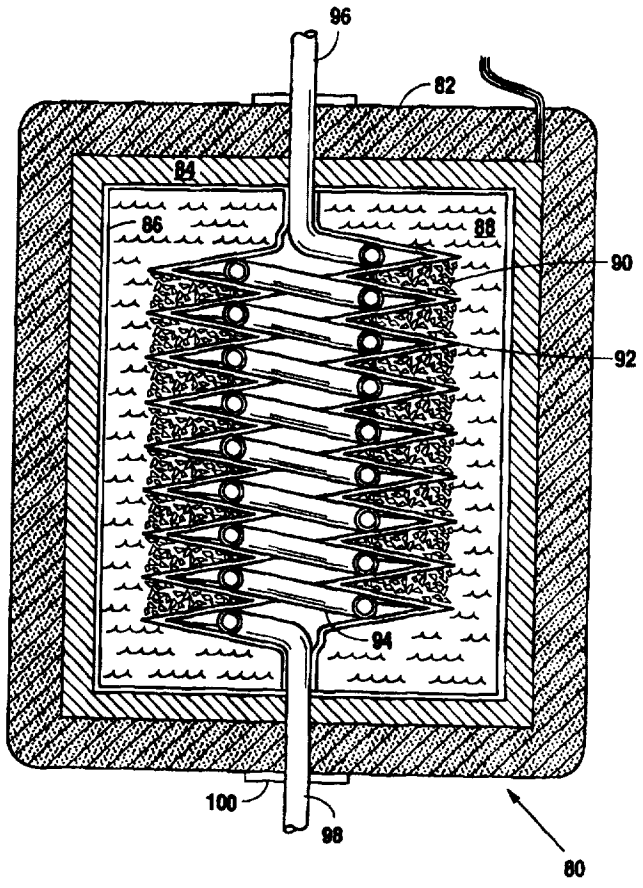

FOR THE PURPOSES OF INFORMATION ONLY

Codes used to identify States party to the PCT on the front pages of pamphlets publishing international applications under the PCT.

AL	Albania	**ES**	Spain	**LS**	Lesotho	**SI**	Slovenia
AM	Armenia	**FI**	Finland	**LT**	Lithuania	**SK**	Slovakia
AT	Austria	**FR**	France	**LU**	Luxembourg	**SN**	Senegal
AU	Australia	**GA**	Gabon	**LV**	Latvia	**SZ**	Swaziland
AZ	Azerbaijan	**GB**	United Kingdom	**MC**	Monaco	**TD**	Chad
BA	Bosnia and Herzegovina	**GE**	Georgia	**MD**	Republic of Moldova	**TG**	Togo
BB	Barbados	**GH**	Ghana	**MG**	Madagascar	**TJ**	Tajikistan
BE	Belgium	**GN**	Guinea	**MK**	The former Yugoslav Republic of Macedonia	**TM**	Turkmenistan
BF	Burkina Faso	**GR**	Greece			**TR**	Turkey
BG	Bulgaria	**HU**	Hungary	**ML**	Mali	**TT**	Trinidad and Tobago
BJ	Benin	**IE**	Ireland	**MN**	Mongolia	**UA**	Ukraine
BR	Brazil	**IL**	Israel	**MR**	Mauritania	**UG**	Uganda
BY	Belarus	**IS**	Iceland	**MW**	Malawi	**US**	United States of America
CA	Canada	**IT**	Italy	**MX**	Mexico	**UZ**	Uzbekistan
CF	Central African Republic	**JP**	Japan	**NE**	Niger	**VN**	Viet Nam
CG	Congo	**KE**	Kenya	**NL**	Netherlands	**YU**	Yugoslavia
CH	Switzerland	**KG**	Kyrgyzstan	**NO**	Norway	**ZW**	Zimbabwe
CI	Côte d'Ivoire	**KP**	Democratic People's Republic of Korea	**NZ**	New Zealand		
CM	Cameroon			**PL**	Poland		
CN	China	**KR**	Republic of Korea	**PT**	Portugal		
CU	Cuba	**KZ**	Kazakstan	**RO**	Romania		
CZ	Czech Republic	**LC**	Saint Lucia	**RU**	Russian Federation		
DE	Germany	**LI**	Liechtenstein	**SD**	Sudan		
DK	Denmark	**LK**	Sri Lanka	**SE**	Sweden		
EE	Estonia	**LR**	Liberia	**SG**	Singapore		

Title: RECHARGEABLE THERMAL BATTERY FOR LATENT ENERGY STORAGE AND TRANSFER

BACKGROUND OF THE INVENTION

1. FIELD OF THE INVENTION

The present invention relates generally to devices and methods for storing and transferring thermal energy for cooling and heating processes. The present invention relates more specifically to the structure and composition of a device for the storage and transfer of latent heat energy for the purposes of rapidly and controllably cooling or heating objects and environments.

2. DESCRIPTION OF THE RELATED ART

The transfer and storage of thermal energy has generally been accomplished through the use of mechanical compressors and the like that convert mechanical energy into thermal energy through the compression and expansion of appropriate compounds such as chloro-fluorocarbons. Problems with these compounds and their effect on the environment, however, have led those in the field to examine alternative compounds for use in mechanical compressor devices and to look to other means for the storage and transfer of thermal energy. While solid state thermal energy devices have been known for some time, their use has generally been limited because of their inability to either rapidly deliver the thermal energy required or to store that energy over time in a device that can, thereafter, rapidly deliver it in large quantities. One common solid state thermal energy device known as the Peltier element is capable of transferring thermal energy into or out of an object or environment that it is in contact with, but unfortunately these operate efficiently only at a relatively slow rate. Such Peltier element devices lend themselves to applications where either the gradual transfer of thermal energy is desired or a device is in place for the storage of thermal energy for later use.

There have been a number of attempts in the past to create materials, devices, and methods for the rapid cooling or heating of objects or environments. The following patents are representative of these efforts.

U.S. Patent No. 4,823,863 issued to **Nakajima et al.** on April 25, 1989, entitled THERMAL CONDUCTION DEVICE, describes the structure of an interface between a heat generating element, typically an electronic component, and a heat sink element. This interface includes a porous layer made of sintered metallic particles that form a rigid sponge-like structure within which a heat conductive oil is retained.

U.S. Patent No. 5,061,630 issued to **Knopf et al.** on October 29, 1991, entitled LABORATORY APPARATUS FOR OPTIONAL TEMPERATURE-CONTROLLED HEATING AND COOLING, describes the use of small particles of a heat conducting solid such as graphite or metal powder, or spheres of metal or glass, that serves both to conduct heat and to stabilize vessels that are placed within the particles. The device uses a Peltier element in contact with a metallic core that in turn is in contact with the small particles.

U.S. Patent No. 2,401,797 issued to **Rasmussen** on June 11, 1946, entitled HEAT EXCHANGER, describes another use of sintered metal as the medium for a heat exchanger. In **Rasmussen**, a number of copper tubes pass through the sintered, highly porous block of bronze. The sintering is carried out after the tubes are imbedded in the bronze powder so that bonding is accomplished between the sintered metal and the copper tubes.

U.S. Patent No. 4,439,337 issued to **Nimerick et al.** on March 27, 1984, entitled COMPOSITION AND METHOD FOR PREVENTING FREEZING TOGETHER OF VARIOUS SURFACES, describes a freeze "releasing" agent that contains at least three water soluble components, including: (1) a polyhydroxy compound or a monoalkyl ether thereof; (2) an organic non-volatile compound having at least one hydrophilic group, (2) being different than (1); (3) optionally a salt which functions to lower the freezing point of water; (4) an organic polymer which functions to increase viscosity; and (5) water as a carrying fluid.

U.S. Patent No. 4,987,896 issued to **Nakamatsu** on January 29, 1991, entitled APPARATUS FOR INCREASING THE ACTIVITY OF THE HUMAN BRAIN, refers to the use of liquids having low freezing temperatures, and gives as examples a 50% aqueous solution of ethylene glycol, propylene glycol, agar solution or the like.

U.S. Patent No. 4,813,283 issued to **Craubner** on March 21,

1989, entitled DENSITY MEASURING APPARATUS, describes the use of a liquid for improving the thermal coupling between a buoyant fluid and a temperature sensor. In the case of certain low temperature experiments, the coupling fluid is described as having a sufficiently low freezing point, and may comprise methanol, ethanol, toluene, isopentene and other suitable liquids.

U.S. Patent No. 3,381,818 issued to **Sachar et al.** on May 3, 1983, entitled POROUS FILM HEAT TRANSFER, describes a composition intended for use as a heat sink film to be coated on the surface of an integrated electronic circuit. The film is composed of a porous metal, preferably aluminum.

U.S. Patent No. 4,981,172 issued to **Haerle** on January 1, 1991, entitled MECHANISM FOR HEAT TRANSFER, describes a heat transfer device that is coated at least in part with metal shavings, metal wires, or coarse metal powder made of thermally conducted material and then sintered. **Haerle** also describes initially distributing the metallic powder by shaking, by introduction over a sticky liquid, or by electrical and/or magnetic effects.

U.S. Patent No. 4,996,847 issued to **Zickler** on March 5, 1991, entitled THERMOELECTRIC BEVERAGE COOLER AND DISPENSER, describes a system that employs a Peltier element in the cooling of a liquid dispensed from a beverage bottle inserted into the top of the device. This device employs the Peltier element in conjunction with a honeycomb array of beverage passageways to quickly cool the liquid.

U.S. Patent No. 4,719,968 issued to **Speros** on January 19, 1988, entitled HEAT EXCHANGER, describes a heat exchange mass made up of particles of crystalline carbon, copper and aluminum. The **Speros** heat exchanger is described as taking a cylindrical or planar configuration and may be contained within metal conduits or, in the case of solar radiation, transparent or translucent enclosures.

U.S. Patent No. 5,314,586 issued to **Chen** on May 24, 1994, entitled PURIFYING AND ENERGY-SAVING WATER FOUNTAIN CAPABLE OF SUPPLYING ICY, WARM AND HOT DISTILLED WATER, discloses an electronic chilling device that consists of radiating fins, a Peltier element and condensing fins. The patent also describes the use of a eutectic melting salt as a thermal medium within which a

coil cooling pipe is positioned.

U.S. Patent No. 3,088,289 issued to **Alex** on May 7, 1963, entitled WATER COOLER, describes a Peltier element positioned between an array of radiating fins or channels, and an interior cooling plate that surrounds the liquid being cooled. Insulation around the entire structure prevents heat loss after cooling.

The above patents describe systems that in general fail as solid state thermal energy mechanisms capable of large scale useful application. The use of solid state cooling and heating devices has generally been limited to very small applications where high rates of energy transfer are not required. Most attempts in the past to create thermal storage devices of significant size (from the standpoint of the quantity of heat energy they can retain) and with substantial transfer rates (from the standpoint of how fast they can absorb or deliver thermal energy), have been limited to mechanical devices such as compressors that are subject to all the disadvantages associated with any such non-solid state configurations.

SUMMARY OF THE INVENTION

It would be desirable, therefore, to have devices and methods for the rapid cooling or heating of objects or spatial environments that incorporate no moving mechanical parts and take up significantly less space than the well known compressor based thermal pump systems. It would be desirable if these devices and methods could operate at constant temperatures and could be made inexpensively of materials not toxic to the environment or to the user. It would be desirable if these devices could be of such a size as to be easily utilized in a large variety of thermal heating and cooling applications.

One primary element of the cooling devices and methods of the present invention is the preferred use of gels, solids, and aqueous solutions capable of being thermally charged so as to absorb and store large quantities of heat. Secondary features of the cooling devices and methods of the present invention include the structures and configurations appropriate for utilizing the thermal storage compounds in the process of rapidly cooling or heating solid objects or fluid or gas streams brought into contact with the devices.

The basic concept and one goal of the present invention is to provide a very large thermal reservoir in a very small spatial volume. This is accomplished by the use of specific gels, solids, and aqueous solutions described herein and by the use of thermal transfer structures that take advantage of the thermal characteristics of these gels, solids, and solutions. The benefits of maintaining a very small spatial volume in the devices of the present invention lie in the ability to easily insulate such volumes and prevent the loss of a thermal charge once it is in place.

Various applications of the present invention are anticipated, including the cooling of water and other fluids for drinking purposes as well as the cooling of fluids and gases for the purposes of refrigeration and air-conditioning. It is anticipated that this non-chloro-fluorocarbon based refrigerant system would have application in air conditioning units for vehicles and in larger enclosures. It is also anticipated that the structures described within the present invention could be implemented in portable rechargeable block configurations that may be inserted into containers of fluid or gas much along the lines of inserting large ice blocks or the like into such containers.

In general, the structures of the present invention are reversible both in physical orientation and in use. A fluid or gas may be passed through a device defined by the present invention or an inversely configured device could be immersed within the fluid or gas or placed in contact with a solid object. Likewise, the materials and compositions of the present invention lend themselves to utilization both as reservoirs for drawing large quantities of heat from a fluid, gas, or solid brought in contact with the device, or in delivering large quantities of heat to the fluid, gas, or solid, once such heat has been stored.

It is therefore an object of the present invention to provide a device for the storage of thermal energy.

It is a further object of the present invention to provide a thermal energy storage and transfer device capable of heating or cooling objects and environments and operable at a constant temperature or over a narrow temperature range.

It is a further object of the present invention to provide a

thermal energy storage device capable of acting as a thermal sink for large quantities of heat present in the environment surrounding the device such that the device may serve to cool the environment.

It is a further object of the present invention to provide a thermal energy storage device capable of acting as a thermal reservoir for retaining large quantities of heat and controllably releasing such heat into the environment surrounding the device.

It is a further object of the present invention to provide a thermal storage device, and structures associated with the device, capable of drawing off large quantities of heat from a fluid or gas that is conducted through the device such that the fluid or gas is cooled once it is released from the device.

It is a further object of the present invention to provide a thermal storage device, and structures associated with the device, capable of releasing large quantities of heat into a fluid or gas that is conducted through the device such that the fluid or gas is heated once it is released from the device.

It is a further object of the present invention to provide a thermal storage device that is small in size and is thus easily insulated so as to maintain over time the thermal reservoir characteristics of the device.

It is a further object of the present invention to provide a thermal storage and transfer device that operates on a highly reversible process that enables the device to be repeatedly recharged without significant degradation.

It is a further object of the present invention to provide devices and methods that are usable in conjunction with a variety of thermal storage compounds that can be selectively chosen in accordance with the requirements of a particular application's temperature range and heat flow requirements.

It is a further object of the present invention to provide a thermal storage device that incorporates materials that are non-hazardous to the user and environment, specifically through the non-use of structures that increase the transfer surface area, including the use of chloro-fluorocarbons.

In fulfillment of these and other objectives, the present invention provides a thermal storage and delivery device and method that approaches the problem of transferring heat energy to and from

objects and environments by selecting substances with known latent heat values most appropriate for the situation, and encasing these selected substances in structural enclosures optimized for the transfer of heat energy into or out of the object or environment to be cooled or heated. The structures of the present invention involve the use of membrane walls between the substances acting as thermal reservoirs and the object or environment to be cooled or heated. The transfer of heat energy through these membrane walls is facilitated by the use of structures that increase the transfer surface area, including the use of metallic powders that may adhere to or be attractively positioned on the membrane walls and yet still be immersed in the substance acting as the thermal reservoir. The selected substances used as the thermal reservoir are contained within enclosures that permit the use of Peltier electrical devices or other thermal transfer mechanisms for the recharge and/or maintenance of the thermal reservoir. Finally, the structures of the present invention are designed to be sufficiently compact so that insulative envelopes, where they are required, are highly efficient because of their relatively low external surface area for heat transfer to occur.

Other objects of the present invention will become clear from a consideration of the detailed description that follows and the appended drawings and claims.

BRIEF DESCRIPTION OF THE DRAWING

FIG. 1 is a schematic block diagram showing the primary structural elements of a device following the present invention as may be used to heat or cool a flow stream of a fluid or gas.

FIG. 2 is a schematic block diagram showing the primary structural elements of a device following the present invention as may be used for immersion into a liquid or gas environment that is to be heated or cooled or be brought into contact with a solid to be heated or cooled.

FIG. 3 is a side view of the structure of a first preferred embodiment of a thermal storage device of the present invention.

FIG. 4 is a cross-sectional view of the device shown in Fig. 3 taken along section line A.

FIG. 5 is a cross-sectional view of a second preferred embodiment of the present invention implementing the generic

structure described in Fig. 1.

FIG. 6 is a detailed cross-sectional view of a container wall structure implementing the principles of the present invention.

FIG. 7 is a schematic side view of one implementation of the present invention for use in conjunction with an automotive air conditioning system.

FIG. 8 is a schematic block diagram showing implementation of the present invention in conjunction with a conventional air conditioning system where multiple air handling units are in place.

FIG. 9 is a cross-sectional view of a typical transportation surface structure incorporating a number of the thermal batteries of the present invention beneath the surface.

FIG. 10 is a cross-sectional view of a typical transportation surface structure incorporating a number of the thermal batteries of the present invention and further incorporating thermal pipes.

FIG. 11 is a cross-sectional view of a typical transportation surface structure incorporating a number of the thermal batteries of the present invention and further incorporating thermal pipes terminating with additional thermal batteries of the present invention.

FIG. 12 is a graphic depiction of the cyclical changes in ambient air temperature compared with transportation surface temperature for the embodiments described in Figs. 9-11.

FIG. 13 is a graphic comparison between the specific energies of the thermal battery of the present invention and a variety of other thermally conductive materials.

FIG. 13a is a cross-sectional detailed view of a typical structural configuration of a simplified thermal battery of the present invention.

FIG. 14 is a perspective view of a typical arrangement of a structural bridge appropriate for implementation in conjunction with the present invention.

FIG. 15 is a cross-sectional view of the structure shown in Fig. 14 taken along section line A-A, showing an application of the thermal batteries of the present invention.

FIG. 16 is a cross-sectional view of a transportation surface structure incorporating an array of the thermal batteries of the present invention constructed according to Fig. 13a.

FIG. 17 is a cross-sectional view of a transportation surface structure incorporating an array of the thermal batteries of the present invention constructed according to Fig. 13a, further utilizing thermal pipes.

FIG. 18 is a cross-sectional view of a transportation surface structure utilizing and array of the thermal batteries of the present invention constructed according to Fig. 13a, further utilizing thermal pipes and additional thermal reservoirs.

FIG. 19 is a graphic representation of the effect of the present invention of narrowing the temperature extremes for a transportation surface exposed to cyclical ambient air temperature changes.

FIG. 20 is a graphic representation of the change in specific energy in relation to the temperature change for systems utilizing the thermal battery of the present invention.

FIG. 21 is a cross-sectional schematic diagram showing an application of the present invention operating in conjunction with a thermal pipe within an aircraft.

FIG. 22 is a schematic diagram showing in generic structural form, the method of both conservation and recharge of the thermal battery of the present invention.

FIG. 23 is a schematic diagram of the system shown in Fig. 22 with the addition of a current controller.

FIG. 24 is a schematic diagram of an alternative approach to a controller system utilizing a combination of high power and low power recharge and conservation elements.

FIG. 25 is a schematic diagram of an alternative approach to a combination of conservation and recharge methods for the present invention.

FIG. 26 is a schematic diagram of a second alternative approach to a combination of conservation and recharge methods for the present invention.

DETAILED DESCRIPTION OF THE PREFERRED EMBODIMENT

Reference is made first to Figs. 1 and 2 for a detailed description of the primary elements of the present invention that form the basis of the structural configuration and the methods involved in effecting the present invention.

Fig. 1 is a schematic block diagram showing the elements of a

device of the present invention appropriate for use in heating or cooling a fluid or gas flow as might be carried through a conduit or pipe. It is appropriate to make the analogy between the device of the present invention and an electrical battery insofar as the principles involved are analogous both in function and in the structures that these functions dictate. Whereas an electrical battery provides a reservoir for generating the flow of electrical current in a conductor, the thermal battery of the present invention provides a mechanism and a reservoir for causing a thermal flow within appropriate structural elements. Whereas an electrical battery typically includes compounds that carry out a chemical reaction that results in the establishment of an electrical potential difference, the present invention utilizes selected substances whose latent heat characteristics are appropriate for providing a given amount of heat flow over a specified period of time. As with electrical batteries, the conductors that are attached to the device at least partially determine the rate of the flow of energy from the device as well as the ability to recharge the device. Thus, the principles of the present invention involve not only the selection of appropriate substances whose freezing point/melting point temperatures and latent heat characteristics fit the requirements of the situation, but also the selection of structural heat conductive elements that facilitate the particular flow of heat required. Unlike the chemical reactions carried out in most electrical batteries, the processes carried out in the thermal batteries of the present invention are, for all practical purposes, completely reversible. Thus, depending on the application, the recharge cycle of the present invention is repeatable for an indefinite period of time.

In Fig. 1, thermal battery (10) is comprised of a sequence of enclosed elements that concentrically surround the flow of the fluid or gas that is to be cooled or heated. Fluid/gas flow (12) would, in the typical situation, occur through a conduit pipe, tube, or the like. Membrane wall (14) is provided to surround the fluid/gas flow either directly in the form of a pipe or conduit, or indirectly by thermal contact with the pipe or conduit. In the preferred embodiment, membrane wall (14) is in direct contact with fluid/gas flow (12).

Energy transfer in the device of the present invention is carried out through solid walls positioned between the thermal reservoir and the substance or environment to be heated or cooled. These solid walls will comprise one or a combination of three basic wall structures. These three basic structures include cellular walls, walls with increased surface areas for a given volume, and magnetic walls. Cellular wall structures are described in more detail below with respect to Fig. 6 and generally contain substances or materials that include graphite powders, metallic powders (such as silver, copper, aluminum, or their alloys), or combinations of graphite and metallic powders or substances containing them. Walls with increased surface area incorporate various geometries such as wings, corrugations, teeth, indents, helicoils, and so on that may be chosen according to the requirements of the specific application. Magnetic walls contain at least two layers, one of which may be magnetic and to which are attached magnetic powders and/or the powders described above. In any event, energy transfer is accomplished through these solid walls between the thermal storage material and the outside object or environment. A rapid transfer of energy is accomplished by the increased surface area created by the above-described mechanisms.

In many applications of the present invention, it is preferable to incorporate metallic powder (16) in conjunction with membrane wall (14) so as to facilitate the heat transfer between membrane wall (14) and aqueous solution (18). Metallic powder (16) serves to increase the surface area through which heat may flow between aqueous solution (18) and membrane wall (14). Other mechanisms for increasing the interface surface area may also be employed. Various structural folds in the membrane wall itself may provide a sufficient heat transfer conduit in some situations, eliminating the need for the particles shown in Fig. 1.

In certain applications, it is anticipated that metallic powder (16), in addition to having optimal thermal characteristics, would be ferromagnetic in nature so as to readily deposit itself on a ferromagnetic metal based membrane wall (14). It is not necessary that metallic powder (16) be rigidly attached, as through a sintering process or the like, to membrane wall (14). This is especially true if metallic powder (16) is made to be magnetic in

character and is simply permitted to attach itself to the surface of membrane wall (14) in a distribution appropriate for the flow of aqueous solution (18) therethrough.

Aqueous solution (18), the selection of which is described in more detail below, is chosen so as to have characteristics appropriate for the temperature, the thermal storage, and the thermal flow requirements of a particular application. In general, the present invention is utilized where large quantities of heat flow are required over short periods of time at relatively constant temperatures, utilizing small volumes of a thermal reservoir. Thus, aqueous solution (18) is in the preferred embodiment typically an organic or inorganic solution, such as those substances identified in the tables below, that is capable of storing large quantities of heat energy within the crystalline and molecular structures of the substance over a constant or relatively narrow temperature range associated with the melting point (freezing point) of the substance.

As is well known in the art, latent heat energy is that amount of energy that may flow in or out of a substance as the temperature of the substance passes through the melting (freezing) point of the substance. As this latent heat flow occurs, the temperature of the substance remains relatively constant at the melting (freezing) point. Normally, as heat energy flows in or out of a substance it effects a temperature change in the substance. At the particular melting or freezing point of the substance, a flow of heat energy in or out of the substance instead carries out a phase change rather than a temperature change. Different substances have greater or lesser latent heat energy values that reflect the amount of heat that may flow in or out of a substance before temperature changes in the substance are once again exhibited. Aqueous solution (18) is therefore selected according to the freezing temperature and the latent heat energy values required for a particular substance and the appropriateness of these parameters for the requirements of the application involved.

Surrounding aqueous solution (18) is thermal wall (20) which functions as conduit for the recharge of aqueous solution (18) and not for the conduction of heat in or out of the object to be cooled or heated. In a preferred embodiment, thermal wall (20) is a

conduit between aqueous solution (18) and Peltier element (22). Peltier element (22) provides a non-mechanical, solid state mechanism for recharging aqueous solution (18) by either directing heat energy into the solution to store for later use or extracting heat energy from the solution to provide a thermal sink for the cooling of an object or environment. Peltier element (22) is, in conjunction with the rest of thermal battery (10), surrounded by thermal insulation (24) to reduce the environmental effects of heat flow in or out of the overall system.

Although most of the examples presented herein of the implementation of the present invention use a Peltier element as the mechanism for recharging the thermal reservoir, it is anticipated that any of a number of different mechanisms for thermally recharging the reservoir could be utilized. As one object of the present invention is to provide a solid state device that is not subject to the maintenance requirements often found in conjunction with compressor based units, it is anticipated that a number of other non-compressor based systems could be utilized in place of the Peltier element. For example, use of the present invention in some environments that operate at high altitude or under water where external conditions provide adequate thermal cooling capabilities, external air or water might be conducted to the thermal battery structure of the present invention for the purpose of gradually recharging the battery during and after use. Likewise, it is anticipated that in some situations conventional cooling and heating units could be utilized to recharge the thermal batteries of the present invention at a rate that allows for the most efficient operation of the conventional units. One example of this latter case is described in more detail with respect to Fig. 8. In this respect, it is anticipated that the present invention could be utilized as both the primary component in a new installation for a heating or cooling system, or as a retrofit element to upgrade or improve the efficiency of an existing heating or cooling system.

Fig. 2 describes a device structure that is essentially the inverse of that shown in Fig. 1. Whereas the device in Fig. 1 would be utilized in association with the cooling or heating of fluid or gas in a stream through the device, Fig. 2 describes the

construction of a device appropriate for use where the device is to be immersed in or otherwise brought into contact with the object or environment to be heated or cooled. In this case, thermal battery (30) is comprised of membrane wall (34) surrounding the device and serving as the primary conduit of heat flow in or out of the device. Metallic powder (36) is, as described above, distributed on membrane wall (34) in order to facilitate the flow of heat between aqueous solution (38) and membrane wall (34).

Thermal wall (40) provides the conduit between aqueous solution (38) and Peltier element (42) which again serves to recharge the device by either extracting heat from aqueous solution (38) or directing heat back into aqueous solution (38).

It is anticipated that the device structure shown in Fig. 1 would function in a manner similar to standard refrigeration or heating systems where a fluid or gas is conducted through the device and heated or cooled for subsequent use after passing out of the device. Fig. 2, on the other hand, would function more in the nature of a "block of ice" or a "hot rock" that is immersed in the fluid or gas to be heated or cooled or is brought into thermal contact with the solid to be heated or cooled. In either case, the principles of heat flow are the same, it is simply the orientation of structural elements that changes in order to direct that heat flow into or out of the substance of concern.

Reference is now made to Figs. 3 and 4 for an example of a first preferred embodiment of the present invention showing application of the structures generally referred to in Fig. 2. Thermal battery (50) disclosed in Fig. 3 is a cylindrical structure comprised primarily of metallic components that encase a selected substance used as a thermal reservoir. Thermal battery (50) is made up of a cylindrical shell (52) which is itself made up of an array of radiating walls (54). Cylindrical shell (52) is capped on either end by end cap (56) and end cap (58). Radiating walls (54) meet at exterior edges (64) and again at interior edges (66). The structure of these radiating walls (54) is better disclosed and described in the cross-section view shown in Fig. 4.

The structure of thermal battery (50) disclosed in Fig. 3 is such as would be appropriate for immersion of the device into a liquid or gas that is to be cooled or heated. Radiating walls (54)

are designed to facilitate the transfer of heat to the substance to be cooled or heated and serve as the membrane walls described with reference to Fig. 2. The walls (54) are preferably constructed of materials that are both thermally conductive and structurally strong. Metals such as aluminum or copper provide both conductivity and strength under most conditions. In many instances, it is desirable that walls (54) be configured to adapt to changes in ambient pressure. This adaptability could be provided by selection of flexible materials or by the design of flexible enclosures as would allow for the expansion and contraction of the compound acting as the thermal reservoir. The flow of a fluid or gas to be heated around thermal battery (50) could be forced by external flow mechanisms or could simply be the natural flow resulting from the temperature differentials developed as a result of the fluid or gas contact with thermal battery (50). Recharge of thermal battery (50) is accomplished through electrical connection (62) that connects to the Peltier elements (not shown in Fig. 3) interior to thermal battery (50). Electrical conductors (62) are sealed against the external fluid or gas by way of end cap seal (60).

Fig. 4 shows, in cross-sectional detail taken along line A in Fig. 3, the interior of thermal battery (50). Radiating walls (54) are shown as they meet at external edges (64) and internal edges (66) and as they are positioned with respect to the perimeter of end cap (56). Positioned and distributed within the interior angles of radiating walls (54) is metallic powder (70). Allowed to distribute itself on these walls as by the magnetic means described above, metallic powder (70) is permeated by aqueous solution (72) and in conjunction with radiating walls (54) provides an increased surface area of contact between aqueous solution (72) and the environment external to the device. Aqueous solution (72) is maintained and enclosed on the interior of thermal battery (50) both by end caps (56) and (58) and radiating walls (54).

Aqueous solution (72) surrounds thermal wall (74) which serves to conduct heat from aqueous solution (72) in and/or out of Peltier elements (76). Peltier elements (76) are positioned around a central core (78) that may either be closed or open in the preferred embodiment depending upon the specific requirements of

the structure of Peltier elements (76).

Reference is now made to Fig. 5 for a detailed description of an implementation of the device of the present invention in the manner shown in Fig. 1. Fig. 5 shows an appropriate structure for utilizing the device of the present invention to heat or cool a fluid or gas stream as it passes through the device. With the objectives of the present invention in mind, especially those of small size and large thermal storage capabilities, thermal battery (80) is structured to conduct a fluid or gas through the device for the purposes of heating or cooling it. Thermal battery (80) is comprised of external insulating shell (82) that surrounds Peltier elements (84). Appropriate electrical connectors for the function of Peltier elements (84) pass through insulative shell (82).

Aqueous solution (88) is contained within thermal wall (86) that is in thermal contact with Peltier element (84) and serves as a mechanism for transferring heat in and out of aqueous solution (88) so as to maintain and/or recharge thermal battery (80). Aqueous solution (88) surrounds a coiled structure configured to permit an efficient flow of heat in or out of the fluid or gas to be heated or cooled. Membrane wall structures (92) are positioned within aqueous solution (88) and have distributed over their surface metallic particles (90) in a manner that increases the surface area of contact between aqueous solution (88) and membrane wall (92). Interior to membrane wall (92) is conduit (94) which carries the fluid or gas to be heated or cooled. Inlet (96) and outlet (98) are the connection points for introducing and extracting the liquid or gas flow through thermal battery (80). Cap seals (100) complete the insulative characteristics of insulative shell (82) for thermal battery (80).

It is anticipated that wall structure (92) shown in Fig. 5 is but one of a large number of differing examples of wall structures generally referenced by the "membrane wall" described above in Fig. 1. Again, this membrane wall structure could be the conduit itself that encloses the flow of fluid or gas through the system. Certain circumstances, however, may dictate one or more structural layers of a "membrane wall" be in place so as to permit the easy physical transport of the fluid or gas through the system. The structure of wall (92) shown in Fig. 5 is therefore provided as illustrative

only and as could vary significantly in appearance depending upon the specific application.

It is anticipated, for example, that the flow of fluid or gas through the system of the present could be carried out through a straight conduit with no bends or coil-like configurations as are shown in Fig. 5. While this would facilitate the flow of the substance through the device, it would reduce the amount of time that the fluid or gas spends in contact with the thermal reservoir of the device. In many instances, the amount of time that the fluid or gas is in contact with the thermal reservoir is less critical than the need for rapid flow through the device. In such a case, modifications of the structure shown in Fig. 5 would be appropriate.

Reference is now made to Fig. 6 for a description of a third preferred embodiment of the present invention that has general applicability to both the structure shown in Fig. 1 and that shown in Fig. 2. Fig. 6 discloses in cross-section the structure of a thermal reservoir wall such as might be used for either a container within which a solid, liquid, or gas is enclosed, or a block that may be immersed in a fluid or gas or brought into contact with a solid.

The wall structure shown in Fig. 6 is positioned adjacent to flow (110) of a fluid or gas to be heated or cooled. Membrane wall (112) serves as the interface for the flow of heat in or out of flow (110). The wall structure of Fig. 6 is made up of individual cells (114) that are bounded by membrane wall (112) on one side and a plurality of cellular walls (115) on the inside. Cellular walls (115) connect to thermal wall (120). Each cell (114) contains aqueous solution (116) and metallic particles (118). Metallic particles (118) are either magnetized or are ferromagnetic so as to be attracted to and distribute themselves along membrane wall (112). Aqueous solution (116) contained within each cell (114) may be recharged through structural wall (120) by way of Peltier element (122). Peltier element (122) is insulated from the external environment by way of insulating layer (124).

As indicated above, the wall structure shown in Fig. 6 could be utilized as the shell wall of a container that encloses a solid, liquid, or gas (110). In this case, cells (114) would be directed

to the interior of the container whereas Peltier element (122) and insulative layer (124) would be on the exterior of the container. On the other hand, the wall structure shown in Fig. 6 could be utilized in the form of a solid block or plate with cells (114) positioned on the exterior surface of the device and Peltier element (122) positioned within the center of the device not unlike the structure shown in Figs. 3 and 4.

Every embodiment of the present invention incorporates the use of an aqueous solution or a gel/solid substance whose latent heat and freezing point temperature characteristics are appropriate to provide the thermal reservoir necessary in any given situation. Most frequently, the substances involved would include a selection of the following:

(a) Aqueous inorganic solutions with freezing points between -60° C and -10° C. These would include inorganic salt solutions such as aqueous solutions of potassium iodide, sodium iodide, and potassium carbonate.

(b) Aqueous organic solutions with freezing points between -60° C and -10° C. These could include aqueous solutions of the primary alcohols, secondary alcohols, tertiary alcohols, phenols, aldehydes, ketones, acids, esters, ethers, any combination of the previous aqueous solutions, and any other substances which contain as their base elements these solutions or combinations of them.

(c) Aqueous solutions of simple and polynuclear complex combinations.

(d) Any other combination of the substances described above in (a), (b), and (c), or any substances based on these substances and any combination of them.

The following tables provide examples of various substances appropriate for selection as the thermal reservoir medium utilized in the present invention. Table 1 provides a number of aqueous salt solutions whose freezing points are below the ordinary freezing point of water such that their use would be appropriate in situations where the cooling of objects or environments near or below the freezing point of water is necessary. Some examples of the latent heat energy for a select few of these substances are

also shown in Table 1.

Table 2 provides crystallizing temperatures for various aqueous alcohol and aqueous glycerin solutions at a variety of concentrations. Here again, the freezing point temperatures provide an array of parameters appropriate for selecting a particular solution when a specific temperature range is desired.

Table 3 provides examples of substances that could serve as thermal reservoirs for implementation of the present invention in a heating process rather than a cooling process. These substances exhibit melting points at temperatures above the boiling point of water and thus could serve to increase the temperature of fluids or gases where such high temperatures are desired. Here again, representative values of the latent heat energies for some of these substances are provided.

Some of the substances identified in Table 3 do not necessarily fit the objective of the present invention for non-hazardous materials but are included in the table as examples of substances with extreme or importantly different latent heat values. In some cases where such large latent heat values might be desirable, efforts could be made to minimize the hazardous characteristics of the substances and still utilize the substances according to the principles of the present invention.

The examples in the tables shown are not intended to be limiting of the substances appropriate for use in conjunction with the structures and methods of the present invention. In addition to the examples shown in the tables which are primarily made up of aqueous solutions and certain solids with appropriate melting points, various gel compositions have been found to be useful as thermal reservoir compounds. On the other hand, these examples do provide representations with regard to the capabilities of the system described by the present invention.

TABLE 1

SUBSTANCE	CONCENTRATION	TEMPERATURE °C	LATENT HEAT KJ/Kg
NH_4Cl	22.7g + 100g water	-15.8	310
$CaNO_3$ $4H_2O$	100g + 100g water	-16	
NH_4NO_3	45g + 100g water	-16.7	286
NaCl	30.7 + 100g water	-21.2	236
$MgCl_2$ H_2O	84g + 100g water	-34.6	
$CaCl_2$ $6H_2O$	143g + 100g water	-55	213

TABLE 2

CRYSTALLIZING TEMPERATURES FOR AQUEOUS ETILIC ALCOHOL AND GLYCERINE AQUEOUS SOLUTIONS

% WEIGHT	5	10	20	40
ALCOHOL (° C)	-1.95	-4.20	-10.7	-30.8
GLYCERINE (° C)	-0.45	-1	-2.5	-17.2

TABLE 3

SUBSTANCE	TEMPERATURE °C	LATENT HEAT Kcal/Kg
PLUTONIUM	640	3773
ZINC	419.5	26
TIN	231.9	14.2
SELENIUM	217.4	16.4
MAGNESIUM	649.5	88
PARAFFIN	42-75	35
CALCIUM	850	78.5
ALUMINUM	659.7	85
NAPTHALINE	80.1	36.62
$AlCl_3$	190	
$FeCl_2$	302	
$CuCl_2$	430	
$ZnCl_2$	315	
$PbCl_2$	500	
$NaCl_2$	802	124
NA_2CO_3	850	
NA_2SO_4	88	62

A typical example of an application of one of the solutions from the tables above and the structures of the present invention would be for the purpose of cooling a beverage for human consumption. A structure such as that disclosed in Fig. 5 could incorporate, for example, an aqueous solution of calcium chloride ($CaCl_2 \cdot 6H_2O$) such as disclosed in Table 1. With a freezing point of -55° C and a latent heat of 213 KJ/Kg, an aqueous solution of calcium chloride could be cooled to its freezing point and utilized as a thermal reservoir to draw heat from a beverage that is passed quickly through a conduit within the aqueous solution. The significant latent heat value of the calcium chloride solution would provide more than enough cooling effect on the beverage to permit a continuous use of the coolant battery at a constant temperature for a reasonable period of time without the necessity of recharging the reservoir. After the latent heat energy had been used up (and even beyond that for a period of time while further heat flow into the solution provided for a temperature rise) process controls would implement a gradual cooling or recharge of the aqueous solution through the Peltier elements in place. Alternately, such thermoelectric recharge devices could act continuously to maintain the charge on the thermal reservoir during the discharge process.

A similar implementation of the structure shown in Fig. 5 could be utilized in, for example, an automotive air conditioning system. The thermal battery could be used to either directly or indirectly cool the air that flows into the vehicle during operation of the air conditioning system. Recharge and/or maintenance of the battery through the Peltier element would occur from the electrical system of the vehicle and could operate over a longer period of time since it is not directly associated with the flow of heat in and out of the air conditioning system. Indeed, the objective of the present invention is to provide a mechanism whereby a large thermal reservoir can provide a rapid flow of thermal energy and can then be gradually recharged over time where the recharge rate is not so important.

Reference is now made to Fig. 7 for a more specific structural example of one implementation of the elements of the present invention. Fig. 7 discloses a simple automotive air conditioning

unit (130) suitable for operation and installation in most small automobiles and trucks. Air conditioning unit (130) is comprised of sandwiched layers of the elements of the present invention. These layers include thermal reservoir (132), Peltier elements (134a) and (134b) and heat dissipation plates (136a) and (136b). The function of the present invention is carried out through thermal reservoir (132), which in the embodiment shown in Fig. 7 preferably uses a gel compound as the material for the thermal reservoir. In thermal contact with thermal reservoir (132), Peltier elements (134a) and (134b) serve to recharge and/or maintain thermal reservoir (132), the elements being electrically driven off of the vehicle's battery by way of electrical connectors (140a) and (140b). The drain on the vehicle's electrical battery for the constant recharge of the thermal battery through Peltier element (134a) and (134b) is sufficiently small as to be more than compensated by the vehicle's own electrical recharging system when in operation.

In this particular application, the use of heat removing plates (136a) and (136b) is facilitated by the use of a water-based cooling system or other means for dissipating heat. Through conduits (138a) and (138b), a coolant flow of water from the vehicle's cooling system can be utilized to assist in the removal and dissipation of heat brought about by Peltier elements (134a) and (134b) during the recharge of thermal reservoir (132).

The entire air conditioning block (130) is held together in the sandwich configuration shown with bolts (142). A flow of air is directed through thermal reservoir (132) by way of thin wall conduits (144). Within each thin wall conduit (144) a turbulence creating vane structure (146) is in place to facilitate the exchange of thermal energy between the air flowing through thin wall conduit (144) and thermal reservoir (132). Well known means for ducting this cooled air into the vehicle's interior are thereafter utilized. Positioning of the thermal block (130) within the vehicle will depend primarily on the appropriate location of the air ducts in the vehicle's interior.

Reference is now made to Fig. 8 for yet another example of the use of the present invention, this time in tandem with, instead of replacing, a conventional heat pump/air conditioning system.

Conventional heat pump air conditioning system (150), such as might be found in a hotel environment for the purpose of air conditioning a large number of hotel rooms, is connected in standard fashion to individual units associated with each of the rooms. In this case, however, thermal batteries (154a) through (154d) are positioned in association with each of the individual units for each of the rooms (162a) through (162d). Air handling units (156a) through (156d) for each of the rooms are positioned as shown and utilize thermal batteries (154a) through (154d) for the purpose of providing individually controlled cooling capabilities. Thermal batteries (154a) through (154d) are recharged by way of recharge devices (152a) through (152d) which operate in conjunction with the conventional cooling system (150) ducted to each device by way of conduit (160).

Conventional system (150) incorporates a heat exchanger (151) that cools a circulating stream of non-volatile, non-pressurized fluid. This circulating fluid may be one or a combination of any of the solutions described above with regard to the thermal reservoir of the present invention. This fluid flows in conduit (160) to each of recharge devices (152a) through (152d) and thereby recharges the thermal storage components of thermal batteries (154a) through (154d). In this manner, the high pressure freon lines normally associated with conventional air conditioning and heat pump systems are restricted to a single location apart from each of the individual room units. A controllable, efficient flow of this liquid in conduits (160) and in return conduit (158) could maintain each of the recharge device (152a) through (152d) in a state sufficient for the continuous maintenance of each of thermal batteries (154a) through (154d), regardless of the demands placed on any individual thermal battery.

The benefits of utilizing individual thermal batteries (154a) through (154d) is that they provide large thermal reservoirs for very quick transfer of thermal energy to (from) individual spatial enclosures. This allows the conventional heat pump system (150) to operate at a more efficient level since its job is primarily to maintain the charge on the thermal batteries and not to react to frequent changes in individual room demands on the cooling system. It is anticipated that the specific structures described in Fig.

8 are generically applicable in any of a number of situations where a conventional heating or cooling system's operation could be made more efficient through the use of a plurality of individual thermal battery based heating or cooling units.

Individual rooms in the example described above could derive different room temperatures from thermal batteries maintained at a singular temperature (as is characteristic of the present invention) through the use of various mixes of air flow across or through the thermal batteries. In many applications, however, it is quite desirable that the heat flow created by the thermal battery occurs at a constant temperature. In fact, the present invention could be utilized in situations where maintenance of a constant temperature is the primary goal of the system. Examples include gyroscopic devices that do not involve large quantities of heat flow but do require the maintenance of constant temperatures.

As indicated above, it is anticipated that many variations of the structures described herein could be implemented for various specific applications of the principles of the present invention. It is anticipated that both small and large scale applications of the principles could be implemented with appropriate modifications of the structures described. From packages as small as might be suitable for electronic microchip cooling to packages that would be large enough to handle the cooling requirements of air conditioning systems for large buildings, the principles of the present invention would be effective in providing an efficient and low maintenance mechanism for the transfer of heat in and out of these objects and environments.

It is further anticipated that the thermal batteries of the present invention could be configured in standardized packages suitable for "off-the-shelf" utilization. These packages would be standardized by geometric structure, energy capacity, and operating temperature. The geometric structure would be standardized for the purpose of incorporating the thermal batteries of the present invention into a large variety of applications without significant modification of the battery's geometry. Standardized operating temperature values would be selected for various groups of specific applications that might, for example, require temperatures that are at or near the freezing point of water, at or near comfortable room

temperatures for air conditioning purposes, at or near the boiling point of water for specific heating purposes, and so on. Broad categories of temperature ranges are thus identifiable and capable of being standardized into such thermal battery packages. Finally, the energy capacity of the individual thermal batteries cold be standardized such that the user could purchase and obtain a package with a known quantity of energy deliverable over a specific period of time. The analogy to electrical batteries is again applicable here where standardization is desired. The temperature rating of a thermal battery would be the equivalent of an electrical battery's voltage, whereas the energy capacity might be the equivalent of the electrical energy capacity of a battery or, indirectly, the equivalent of the current deliverable from a battery. The standardized structures could be analogous to the various standardized electrical cells that are currently on the market. Both the structures and compositions of the present invention lend themselves to such standardized packaging.

The present invention lends itself to use in situations where it is desirable to balance changes in the ambient temperature in order to maintain an object or a surface at or above a selected temperature. An ideal example of such a situation would be the case of maintaining transportation surfaces at or above the freezing point of water. Movement in any of a number of different types of transportation vehicles is dependent upon a safe adherence to the surface upon which the vehicle travels. In most cases, these surfaces are exposed to weather conditions that include temperatures below freezing and precipitation in the form of ice and snow. It is often desirable, therefore, to maintain road surfaces, runway surfaces and the like, at temperatures above the freezing point of water so as to prevent the formation of ice and to increase the safety of vehicles traveling across the surface.

The present invention can be utilized to assist in this effort in a number of different ways. Figs. 9-11 disclose a variety of arrangements whereby thermal batteries of the present invention are incorporated under a transportation surface that is constructed in contact with the ground. Because of the specific temperature at which the surface should be maintained, it is appropriate to incorporate within the thermal batteries a thermal medium made of

pure amorphous water that is maintained at a slightly negative pressure. It is known in the art that pure amorphous water maintained at such a negative pressure exhibits a freezing point above the normal 0° C freezing point of water at ambient pressure.

Fig. 9 shows a typical highway structure wherein a number of thermal batteries of the present invention are incorporated beneath the pavement surface. In Fig. 9, pavement (202) is laid across sub-layer (204) which itself is positioned atop soil surface (206). Thermal batteries (208a) through (208n) are in thermal contact with both sub-layer (204) and soil (206). As indicated above, thermal batteries (208a) through (208n) would incorporate pure amorphous water as the thermal medium, maintained at a slightly negative pressure such that its freezing point is at or about 6^0 C.

The changes in ambient air temperature to which the road surface is exposed are typically associated with the cycle of day and night and are described in more detail below with respect to Fig. 12. The process is such that a gradual recharge of thermal batteries (208a) through (208n) will occur during the warming periods of the day. The configuration of thermal batteries (208a) through (208n) is such that heat energy may be drawn from the surrounding soil (206) and stored within the batteries. At night, when the ambient temperature declines, the stored heat is free to be released into road surface (202) by way of sub-layer (204). An appropriate balancing of the number and position of thermal batteries (208a) through (208n) will maintain road surface (202) at a temperature above the freezing point of water and thus prevent the formation of ice thereon.

Fig. 10 discloses a slightly modified application of the same principle that incorporates thermal pipes of the type described in U.S. Patent No. 3,229,759. In this case, thermal batteries (210a) through (210n) are linked together by a thermal pipe (212). Thermal pipe (212) also extends into the earth at sections (214) to thermal reservoirs (216). In this manner, heat is conducted from well below the immediate surface (206) of the earth up through thermal pipes (212) and (214) to a point where it may recharge thermal batteries (210a) through (210n). In the same manner as described above with Fig. 9, thermal batteries (210a) through (210n) release their stored thermal energy into the road surface

(202) by way of sub-layer (204).

Fig. 11 discloses yet another embodiment of the above-application, wherein thermal batteries (224) are used in place of thermal reservoirs (216) described with respect to Fig. 10. In this case, thermal batteries (224) serve to collect the heat which is transferred through thermal pipes (222) and (220) to a point where thermal batteries (218a) through (218n) may be recharged. At appropriate times during the day or night, the stored heat can be released from thermal batteries (218a) through (218n) into the road surface (202) through sub-layer (204).

Fig. 12 is a graphic depiction of the cyclical changes in ambient temperature (230) as compared to the relatively constant road surface temperature (232) in the above described applications. As mentioned previously, the warming of the ambient environment above the freezing point of water is usually sufficient to provide the thermal energy necessary to recharge the thermal batteries of the present invention to a point where they are capable of continuously maintaining a road surface area at or above the freezing point of water. The actual heat flow that occurs during the cyclical temperature changes during the day is gradual during the warming periods of the day and more abrupt during the cooling periods. In other words, over the warming period of the day, the thermal batteries of the present invention are gradually recharged as is structurally efficient for their design. Once a cooling of the ambient air occurs, the heat stored in the thermal batteries can be more abruptly released into the road surface to maintain the surface a temperature above 0° C.

Fig. 13 shows a comparison between the specific energies of the thermal battery of the present invention (using pure amorphous water at negative pressure) and a variety of other thermally conductive materials commonly associates with the transfer and/or storage of thermal energy. The comparison shows the specific energy in joules per unit for the thermal battery of the present invention as compared to aluminum, copper, iron, and ordinary earth.

Because of the specific temperature that this embodiment of the present invention functions at, the selection of pure amorphous water at a negative pressure provides the most cost-efficient and

safest thermal medium. The particular designs described above adapt easily to address a number of specific applications. These applications include the prevention of frost formation on various structural features such as highways, runways and bridges. In addition, the same principles can be utilized to prevent the formation of frost in various appliances such as freezers and refrigerators. This could be accomplished without the necessity of incorporating separate heating units into such appliances as is commonly the case. In addition, there are a number of industrial situations where constant temperatures are required and the thermal sink characteristics of the thermal battery of the present invention utilized in the above manner is particularly appropriate.

An even more passive application of the thermal battery of the present invention is possible with a simplified construction of the device in a spherical configuration. Fig. 13a discloses in cross-sectional detail, the structure of a spherical thermal battery appropriate for use in large quantities in various structural applications. Thermal battery (234) is generally constructed in a hollow, spherical geometry with shell-type walls (235). Contained within the hollow sphere is thermal media (236). In applications such as those described above, thermal media (236) would preferably be pure amorphous water maintained at a slightly negative pressure.

The interior surface of shell walls (235) would, in the preferred embodiment, have an irregular surface (238) so as to increase the surface area contact with thermal media (236). The material from which the thermal battery (234) shown in Fig. 13a could be constructed include a variety of more or less thermally conductive substances. The structural shape of thermal battery (234) is chosen because of its ability to stand up against external forces brought about in the variety of applications to which it is directed. These applications are described in more detailed below. The material from which the thermal battery (234) can be constructed could include metallic substances, non-metallic substances, concrete materials, plastic materials, or a variety of other substances, depending upon the application requirements. The size of these spherical thermal batteries can be anything from miniature (on the order of less than one centimeter in diameter)

to very large (on the order of 20 centimeters in diameter or more).

The general objective in constructing thermal batteries such as disclosed in Fig. 13a is to provide an economical means for incorporating such batteries into structural solids and surfaces. Figs. 14-18 disclose various applications wherein thermal batteries constructed as shown in Fig. 13a would be appropriate. As indicated above, one of the most common problems that the thermal battery can address involves the prevention of ice formation on road surfaces and the like. Fig. 14 discloses the typical arrangement of a structural bridge connecting two elevated surfaces and exposed underneath to the ambient air. It is not uncommon for such bridge structures to be the first road surfaces that freeze when ambient air temperatures drop below 0° C. It would be desirable, therefore, to have an economic means for maintaining such structural bridge surfaces at temperatures above 0° C even when the ambient air temperature is below freezing.

Bridge structure (240) with road surface (242) is supported on its elevated end sections by structural members (244). In Fig. 15, bridge structure (240) is shown in cross-section with asphalt road surface (242) layered on the top. In cross-section, bridge structure (240) comprises a concrete frame (246) that, as is typical in the field, incorporates a number of reinforcing rods (248), usually made of iron or steel. Concrete frame (246) defines a number of voids (250) within which may be placed a large number of thermal batteries (252) of the type described above in Fig. 13a. Incorporating thermal batteries (252) within voids (250) essentially increases the thermal mass of bridge structure (240) to the point where it is capable of retaining large quantities of heat energy and releasing such energy when ambient air temperatures drop below freezing. If thermal batteries (252) incorporate pure amorphous water at negative pressure as a thermal media as described above, then the thermal batteries will operate at a crystallization temperature of 6.5° C. This is typically sufficient to maintain road surface (242) at a temperature above 0° C for moderate periods of time.

Fig. 16 discloses yet another application of the thermal batteries configured as shown in Fig. 13a. Extending the concept disclosed in Figs. 9-11 above, Fig. 16 shows the utilization of a

large number of thermal batteries (270) configured in the spherical shape described in Fig. 13a. Incorporated into the concrete material (264) of the transportation surface (262), thermal batteries (270) carry out the same function of maintaining a large thermal mass and are thus capable of reducing the temperature extremes experienced on the transportation surface (262). Highway section (260) shown in Fig. 16 is constructed such that road surface (262) is bounded on either side by insulating material (266) to further prevent the release of thermal energy into any volume other than road surface (262). The size and number of thermal batteries (270) in a construction such as that shown in Fig. 16 would be dependent upon the expected changes in ambient temperature and the thermal conductivity of the medium of which the structure is comprised.

Figs. 17 and 18 disclose a combination of the concepts described in Figs. 10 and 11 with a spherical thermal battery configuration as shown in Fig. 13a. As in Fig. 10, Fig. 17 shows a transportation surface (280) constructed of concrete (288) or a similar material. Road surface (280) is constructed directly on soil material (284) and insulated on either side by insulating material (282) for the same purposes described above. Spaced and distributed within concrete material (288) are thermal batteries (286) of the spherical construction described in Fig. 13a. In addition, however, thermal pipe (290) connects road surface structure (280) with thermal reservoirs (292) that, because of their depth within the earth (284), are maintained at a higher temperature and are less susceptible to reductions in the ambient air temperature. Thermal pipe (290) thereby conducts heat energy up from thermal reservoirs (292) into road surface structure (280) for the maintenance and/or recharge of thermal batteries (286) therein.

Fig. 18, like Fig. 11 above, discloses the use of additional thermal batteries (312) with enlarged transfer areas in place of thermal reservoirs (292) shown in Fig. 17. In Fig. 18, road surface structure (300), made up of concrete material (308) (or the like), is bounded on either side by insulating material (302) in its place on soil (304). Thermal batteries (306) of the construction shown in Fig. 13a are spaced and distributed within

concrete material (308). Thermal pipes (310) are capable of conducting thermal energy from thermal batteries (312) buried deeper within earth (304) up to road surface structure (300) and to thermal batteries (306).

Reference is now made to Figs. 19 and 20 for a quantitative example of the manner in which utilizing thermal batteries of the configuration described, prevent frost formation on structural surfaces such as bridges, runways, highways, and the like. In Fig. 19, an example is provided, wherein the mean air temperature (day and night) for one to two days is approximately 6-7° C. This mean air temperature results from periods of time over which the temperature (314) is well above 6.5° C and periods of time (at night) where the temperature is below 0° C. The graph in Fig. 19 also shows the resultant changes in the structural temperature (316) where no use of thermal batteries of the present invention is made. As can be seen in the figure, the temperature does not perfectly track the ambient air temperature but follows it in a manner that pulls the structural temperature below freezing for short periods of time. It is well known that the structural temperature change with respect to the ambient air temperature is influenced mainly by the materials utilized (the specific heat and thermal conductivity) in the construction of the surface. Typically, within a few hours after the ambient air temperature drops below 0° C, bridge structures and the like will experience freezing temperatures on their surfaces.

Utilization of the present invention provides a temperature profile such as is disclosed in Fig. 20 where plot (319) shows the use of the present invention and plot (317) shows non-use. Assuming a typical composition for a bridge segment (75% concrete, 25% iron), a specific heat value for the bridge segment can be determined.

$$75\% \times 653 \text{ J/Kg}^\circ \text{ C} + 25\% \times 460 \text{ J/Kg}^\circ \text{ C} = 600.5 \text{ J/Kg}^\circ \text{ C}$$

For an 8^0 C temperature drop, the quantity of energy that a typical bridge segment (per weight unit) would release would be:

$$600.5 \text{ J/Kg}^\circ \text{ C} \times 8^\circ \text{ C} = 4{,}804 \text{ J/Kg}^\circ \text{ C}$$

This quantity of energy under ordinary circumstances would result in the bridge freezing over within a few hours after ambient air temperature falls below 0° C.

On the other hand, if the same bridge segment incorporated 30% thermal batteries containing pure water at negative pressure (freezing point at 6.5° C) and relative percentages of 25% iron and 45% concrete, the specific heat now becomes 1,663 J/Kg° C above 6.5° C, 100,609 J/Kg° C at 6.5° C, and 936 J/Kg° C below 6.5° C. If we consider the specific heat for the new composition, the bridge segment is able to release an energy (from 8° C to 0° C) as follows:

1.5° C x 1,663 J/Kg° C + 100,609 J/Kg° C + 6.5° C x 936 J/Kg° C = 109,187.5 J/Kg° C.

This amount is twenty-two times greater than the first example. Thus, if a structure such a bridge would freeze within four hours under certain ambient conditions, the new bridge structure would freeze roughly within three days, provided that the same ambient temperature conditions are experienced. For large surfaces, such as bridges, this would mean that they would remain clear of ice simply as a result of increased ambient air temperatures during the day.

The important elements of the application of the thermal battery of the present invention as described above lie in its ability to improve transportation safety without an increase in energy and without pollution. The particular media described above of pure water maintained at a negative pressure is appropriate both because of its economical availability and its non-polluting characteristics. Use of such a thermal media in the thermal batteries as described can be customized for particular applications by simply increasing or decreasing the number and size of the thermal batteries rather than modifying the thermal media. Appropriate consideration can be given for the reductions in structural strength that might result from substituting some portion of the concrete material in the above-described structures with the thermal battery elements. It is anticipated, however,

that under most circumstances, the number and size of the thermal batteries required to maintain surface temperatures at or above the freezing point is not so great as to displace significant quantities of structural concrete material. It is anticipated that modifications of the external surface of the thermal batteries described can be made to improve their adherence and thermal contact with the materials within which they are encased.

Finally, attention is drawn to Figs. 21-26 for a description of a variety of mechanisms for maintaining thermal charge on the thermal batteries of the present invention. Any of the thermal batteries described in the present application, regardless of their dimensions, shapes, internal substances, use, construction, and so on, can be charge maintained for long periods of time with either warm or cold "charges". Maintaining the batteries at a warm or cold charge can be generally accomplished in one or more of the following ways:

1. Maintaining the battery in a refrigerated environment or utilizing conventional heating or cooling mechanisms to maintain the battery at a temperature characteristic to the thermal media that it utilizes.
2. Maintaining the battery in natural environments, cold or warm, that are at or near the temperatures characteristic to the thermal media in the battery.
3. Isolating the thermal battery from the ambient environment, utilizing conventional methods such as (a) vacuum enclosures, (b) thermal insulation materials such as asbestos, glass walls, ceramic and combinations of these materials, and (c) causing the flow of air at

specific temperatures determined by the battery's characteristics onto the exterior walls of the battery which effectively isolates the walls from ambient temperatures.

Specific applications of the above general approaches can be seen Figs. 21-26 and are described in more detail below.

In Fig. 21, the utilization of a thermal pipe or tube is shown. In the example, a thermal battery (324) operates in conjunction with thermal pipe (326) as the two might be utilized within an aircraft (320). Aircraft operating at high altitude will experience low temperatures on the exterior of aircraft skin (322). These low temperatures can be utilized to maintain thermal battery (324) at an appropriate low temperature. Thermal pipe (326) operates through the evaporation of liquid (328) to a point where it condenses (330) in thermal contact with aircraft skin (322). Condensed/cooled liquid (332) then falls back into contact with thermal battery (324) in liquid pool (334). In this manner, any heat energy absorbed by thermal battery (324) effects the further evaporation (328) of the liquid to again move through the cycle of cooling contact with aircraft skin (322).

The thermal tube as shown and described above can be used as either a recharging system for thermal battery or as a conservation system for a charged battery. It is possible to combine the thermal tube as described with conventional systems for the conservation and isolation of a charged thermal battery. As already described, conservation systems for charged thermal batteries can utilize thermoelectric devices such as Peltier elements. Utilizing low-power thermoelectric elements or high-

power elements operating at low current, can create a preset temperature on the hot or cold side of the thermoelectric element. When utilized in conjunction with the thermal battery as shown in Fig. 22, such operation restricts the release of either hot or cold energy from the battery into the environment.

A generic system such as is described in Figs. 22 and 23 can be utilized for both a conservation and a recharge of the thermal battery. In Fig. 22, the thermal "charge" on thermal battery (340) may be both recharged and/or conserved through the use of thermoelectric devices (344) and (346). A direct current power supply (348) is used to operate and perform either function. The generic system shown in Fig. 23, which incorporates a current controller (360), permits a switch-over from a recharge system to and from a conservation system. At appropriate times, and depending upon the demands made on the thermal battery, controller (360) can cause thermoelectric elements (356) and (354) to operate at high power for periods of time appropriate for recharging the battery and then to be switched to low power for conversation during times of less demand upon the battery.

Fig. 24 shows an alternative approach to the controller system, wherein a combination of high-power elements (372a/376a - 372b/376b) for recharging, and low-power elements (372a/376a - 372b/376b) for conservation, eliminate the need for an electric current controller. The system shown in Fig. 24 instead uses an automated switch (380) that alternately activates the high-power thermoelectric elements or the low-power thermoelectric elements. The arrangement of these high and low-power thermoelectric elements could be alternated so as to provided both even recharge and even

conservation of the thermal battery.

In addition, it is anticipated that combinations of various conservation and recharge methods could be utilized in conjunction with a specific thermal battery in a particular application. Figs. 25 and 26 show two alternative approaches to such combinations. In Fig. 25, a thermal barrier (394) is positioned adjacent the thermal battery (390) with conventional insulation (392) surrounding the entire assembly. In Fig. 26, conventional insulation (399) surrounds the thermal battery (398) and is bounded on either side by a thermal barrier (400). The thermal barrier (394) or (400) in each case could be any of the methods for recharge or conservation described above.

In summary, conservation and recharge of the thermal battery can be carried out by any one or a combination of mechanisms. Thermal energy can be transferred to and from the thermal battery by thermal tubes or thermoelectric elements. Various combinations of isolation and insulation mechanisms can be utilized in association with the recharge and conservation systems.

A final useful application of the thermal batteries of the present invention can be described as the elimination of peak electrical demands often resulting from large air conditioning systems and the like. Just as with the maintenance of transportation structures at or above the freezing point of water, it is possible to utilize the thermal batteries of the present invention to maintain enclosed environmental air conditioning systems at temperatures at or around the comfort level. Because of the ability of the thermal batteries of the present invention to create a thermal buffer, wherein temperature extremes are

reduced, it is possible to incorporate the thermal batteries into systems where heat energy is released from enclosed environmental air systems during the night so as to recharge thermal batteries for the purpose of maintaining cooler temperatures. In effect, the opposite action of that described in conjunction with road surfaces can be achieved.

The overall effect of this thermal inertia or thermal buffering in an environment where cooling of the air is desired is to reduce the electricity demands typically experienced during the hottest portions of the day when conventional air conditioning systems are running full on. Utilizing thermal batteries in conjunction with such air conditioning systems would permit the reduction of peak demand times by effectively absorbing larger quantities of heat energy from the ambient air during the hot portions of the day without a resulted increase in enclosed environmental air temperatures. In other words, the thermal batteries of the present invention can provide an effective heat sink that reduces the need for peak operation of the conventional air conditioning systems. These heat sink elements can then release their stored heat energy over a period of time at night so as to be "recharged" in time for the next peak demand.

In each of the instances described above, the thermal batteries of the present invention provide an effective means for smoothing out or buffering the flow of thermal energy in and out of substances, objects, or surfaces of concern. As long as average temperatures over a long period of time are at or near desired levels, the thermal batteries of the present invention can serve to effectively narrow the temperature range that a structure will

experience to the point where adverse freezing conditions or adverse heating conditions can be avoided. In addition, it has been shown that a variety of conventional isolation and insulation methods can be applied to the thermal batteries of the present invention in a way that is effective for maintaining and/or recharging the batteries for use.

In summary, the present invention describes a solid state device capable of storing a high quantity of energy in a very small volume. The device utilizes a reversible process to very quickly deliver this large quantity of energy. The devices incorporate non-toxic substances operable at ambient pressures and thus eliminate many of the hazards and other problems associated with electrical energy storage devices.

CLAIMS

We Claim the principle, the walls, the storage means, the devices and the rechargeable devices as follows:

1. A device for the storage of thermal energy and the subsequent transfer of said thermal energy to or from an external substance, said external substance being a solid, liquid, or gas, said device comprising:

a thermal reservoir, said thermal reservoir comprising a quantity of a compound at or about a temperature approximately equal to said compound's freezing point temperature, said compound capable of storing a known quantity of latent thermal energy;

means for containing said thermal reservoir;

means for conducting said thermal energy between said thermal reservoir and said external substance, said conducting means comprising a membrane wall in thermal contact with said thermal reservoir and said external substance; and

means for thermally recharging said thermal reservoir by directing heat flow into or out of said compound so as to maintain said compound at or about said freezing point;

wherein a transfer of almost all of said latent thermal energy may occur between said thermal reservoir and said external substance through said membrane wall.

2. The device of Claim 1 further comprising means for optimizing thermal conduction through said membrane wall between said compound comprising said thermal reservoir and said external substance.

3. The device of Claim 2 wherein said optimizing means comprises

a layer of thermally conductive particles positioned in thermal contact with said membrane wall and immersed in said compound comprising said thermal reservoir.

4. The device of Claim 2 wherein said optimizing means comprises an enlarged surface area of said membrane wall, said enlarged surface area comprising a plurality of folded sections extending into said compound comprising said thermal reservoir.

5. The device of Claim 3 wherein said thermally conductive particles are ferromagnetic and said membrane wall comprises a ferrous material, said particles being positioned in thermal contact with said membrane wall through magnetic attraction.

6. The device of Claim 1 wherein said containing means further comprises means for thermally insulating said thermal reservoir from an environment surrounding said device.

7. The device of Claim 1 wherein said containing means further comprises flexible enclosure elements for permitting said thermal reservoir to automatically adapt to changes in ambient pressure in an environment surrounding said device.

8. The device of Claim 1 wherein said recharging means comprises a thermoelectric element in thermal contact with said thermal reservoir.

9. The device of Claim 8 wherein said thermoelectric element comprises a Peltier element in thermal contact with said thermal reservoir.

10. The device of Claim 1 wherein said recharging means comprises a thermal energy conduit for conducting ambient thermal energy between a naturally occurring environment in proximity to said device and said thermal reservoir.

11. The device of Claim 1 wherein said recharging means comprises a conventional compressor-based thermal pump in contact with said thermal reservoir.

12. The device of Claim 1 wherein said compound comprising said thermal reservoir comprises an aqueous solution at atmospheric pressure with a freezing point equal to or less than 0° centigrade.

13. The device of Claim 1 wherein said compound comprising said thermal reservoir comprises a compound at atmospheric pressure with a melting point equal to or greater than 100° centigrade.

14. The device of Claim 1 wherein said compound comprising said thermal reservoir comprises a gel at atmospheric pressure.

15. A device for the storage of thermal energy and the subsequent transfer of said thermal energy to or from a stream of fluid or gas, said device comprising:

a thermal reservoir, said thermal reservoir comprising a quantity of a compound at or about a temperature approximately equal to said compound's freezing point temperature, said compound capable of storing a known quantity of latent thermal energy;

means for containing said thermal reservoir;

means for conducting said stream of fluid or gas through said thermal reservoir, said conducting means comprising a conduit having a membrane wall, said membrane wall for conduction of said thermal energy between said thermal reservoir and said stream of fluid or gas, said conduit being at least partially immersed in said thermal reservoir; and

means for thermally recharging said thermal reservoir by

directing heat flow into or out of said compound so as to maintain said compound at or about said freezing point;

wherein a transfer of almost all of said latent thermal energy may occur between said thermal reservoir and said stream of fluid or gas through said membrane wall.

16. A device for the storage of thermal energy and the subsequent transfer of said thermal energy to or from an external environment of fluid or gas, said device comprising:

a thermal reservoir, said thermal reservoir comprising a quantity of a compound at or about a temperature approximately equal to said compound's freezing point temperature, said compound capable of storing a known quantity of latent thermal energy;

means for containing said thermal reservoir;

means for conducting said thermal energy between said thermal reservoir and said external environment, said conducting means comprising a membrane wall for enclosing said compound of said thermal reservoir and for immersion in said external environment of fluid or gas; and

means for thermally recharging said thermal reservoir by directing heat flow into or out of said compound so as to maintain said compound at or about said freezing point;

wherein a transfer of said latent thermal energy occurs between said thermal reservoir and said external environment of fluid or gas through said membrane wall.

17. A device comprising a wall structure for the storage of

thermal energy and the subsequent transfer of thermal energy to or from a quantity of a substance or a surrounding environment, said wall structure for construction of an open container for enclosing said substance or for construction of a closed solid for immersion into said environment, said wall structure comprising:

a plurality of thermal reservoir cells, said thermal reservoir cells comprising:

a quantity of a compound at or about a temperature approximately equal to said compound's freezing point temperature, said compound capable of storing a known quantity of latent thermal energy; and

a membrane wall serving to at least partially contain said compound and to permit a flow of thermal energy between said compound and said substance or environment;

means for thermally recharging said thermal reservoir cells by directing heat flow into or out of said compound within said plurality of cells so as to maintain said compound at or about said freezing point; and

means for optimizing thermal conduction through said membrane wall between said compound and said substance or environment;

wherein a transfer of almost all of said latent thermal energy may occur between said thermal reservoir cells and said substance or environment.

18. A device for the storage of thermal energy and the subsequent transfer of thermal energy to or from an external environment of fluid or gas, said device comprising:

a thermal reservoir, said thermal reservoir comprising a quantity of an aqueous solution at or about a temperature approximately equal to said solution's freezing point temperature, said aqueous solution capable of storing a known quantity of latent thermal energy, said aqueous solution having a latent heat value in the range from approximately 150 to 350 kilojoules per kilogram;

a cylindrical container for enclosing said thermal reservoir, said container comprising;

a cylindrical wall, said cylindrical wall comprising a plurality of wall segment pairs arranged peripherally about a central axis of said container, said wall segment pairs comprising two wall elements joined at an external edge and projecting an acute angle towards said central axis of said container, said wall segments further joined one to another to form said cylindrical wall; and

a first and a second end cap connected to said cylindrical wall so as to close said cylindrical container;

a layer of metallic particles immersed in said aqueous solution and deposited on an interior surface of said cylindrical wall within an area defined by said acute angle formed by said wall elements; and

a thermoelectric device for recharging said thermal reservoir and maintaining said aqueous solution at a temperature approximately equal to said freezing point during said

transfer of said latent thermal energy between said thermal reservoir and said external environment of fluid or gas through said membrane wall.

19. A cooling device for the reception and storage of thermal heat energy drawn from a flow of gas, said cooling device comprising:

a thermal reservoir, said thermal reservoir comprising a quantity of a gel at or about a temperature approximately equal to said gel's freezing point temperature, said gel capable of receiving and storing a quantity of latent heat energy, said gel having a latent heat value in the range from approximately 150 to 350 kilojoules per kilogram;

at least one gas conduit having thermally conductive walls, said conduit immersed in and passing through said thermal reservoir, said gas conduit having an inlet and an outlet, said inlet receiving said flow of gas and said outlet releasing said flow of gas after said transfer of said heat energy;

means for directing said flow of gas through said at least one gas conduit; and

a thermoelectric device for recharging said thermal reservoir and maintaining said gel at a temperature approximately equal to said freezing point during said transfer of said latent heat energy from said flow of gas.

20. The device of Claim 19 wherein said thermal reservoir is positioned between a first and a second element of said thermoelectric device and said device further comprises:

means for removing heat energy from said first and second

elements of said thermoelectric device;

means for monitoring a temperature of said thermal reservoir;

means for controlling said thermoelectric device in response to said monitored temperature, said control means for maintaining said thermal reservoir at or near said freezing point temperature;

means for monitoring a temperature of said flow of gas; and

means for controlling a rate of said transfer of heat energy from said flow of gas.

21. A standardized device for the storage and transfer of thermal energy comprising:

a thermal reservoir maintained at or about a standardized freezing point temperature, identifiable as said device's temperature rating, for storing a selected quantity of latent thermal energy, said quantity of latent thermal energy being said device's energy capacity rating; and

a thermal conductor configured in a standardized structure for delivering thermal energy from said thermal reservoir and alternatively, to said thermal reservoir for the purpose of recharging said device.

22. A transportation surface incorporating a plurality of the thermal energy storage devices of Claim 1, said transportation surface comprising;

an exposed planar surface made of a rigid material of a strength sufficient for the support of typical transportation vehicles;

a conglomerate sub-layer beneath said planar surface and supporting said planar surface on a prepared ground

surface; and

a plurality of said thermal energy storage devices spaced within said conglomerate sub-layer and in thermal contact with said prepared ground surface.

23. The transportation surface of Claim 22 further comprising at least one thermal pipe extending between and in thermal contact with said thermal energy storage devices and an area beneath said prepared ground surface.

24. The transportation surface of Claim 23, wherein said thermal pipes each terminate in a thermal reservoir in said area beneath said prepared ground surface.

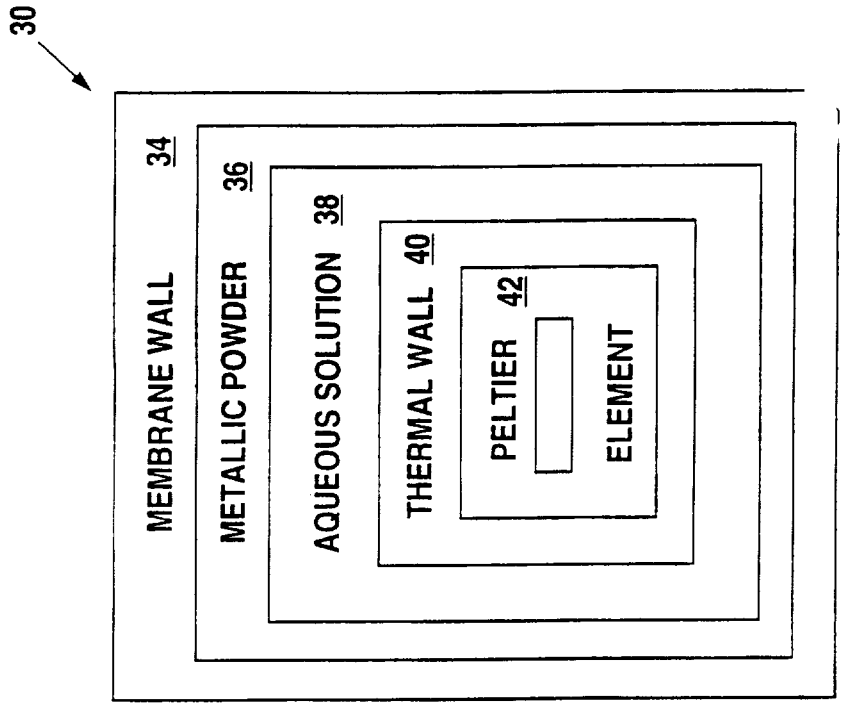
30
MEMBRANE WALL 34
METALLIC POWDER 36
AQUEOUS SOLUTION 38
THERMAL WALL 40
PELTIER 42
ELEMENT

Fig. 2

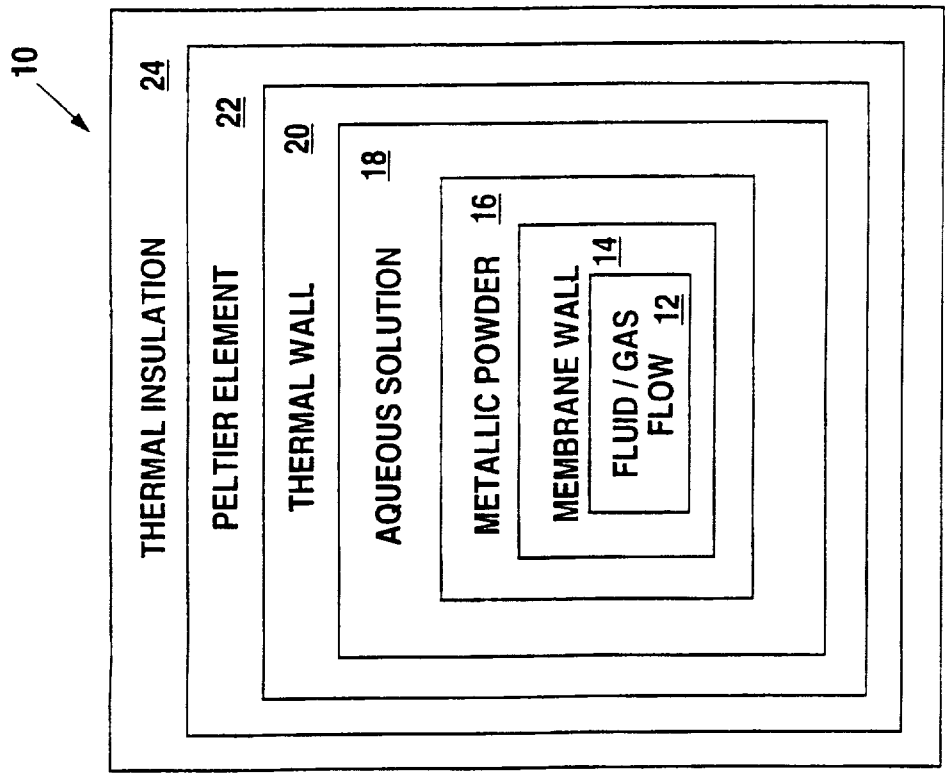
10
THERMAL INSULATION 24
PELTIER ELEMENT 22
THERMAL WALL 20
AQUEOUS SOLUTION 18
METALLIC POWDER 16
MEMBRANE WALL 14
FLUID / GAS FLOW 12

Fig. 1

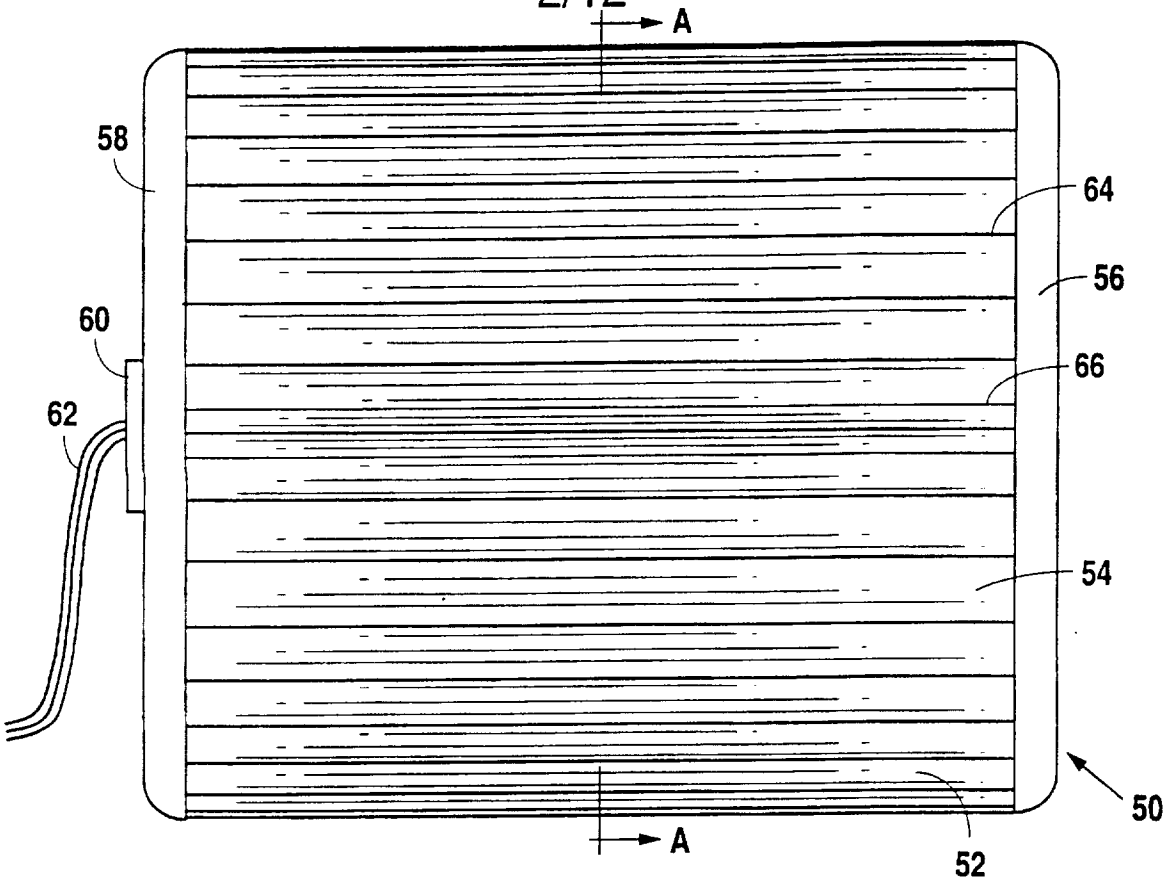

Fig. 3

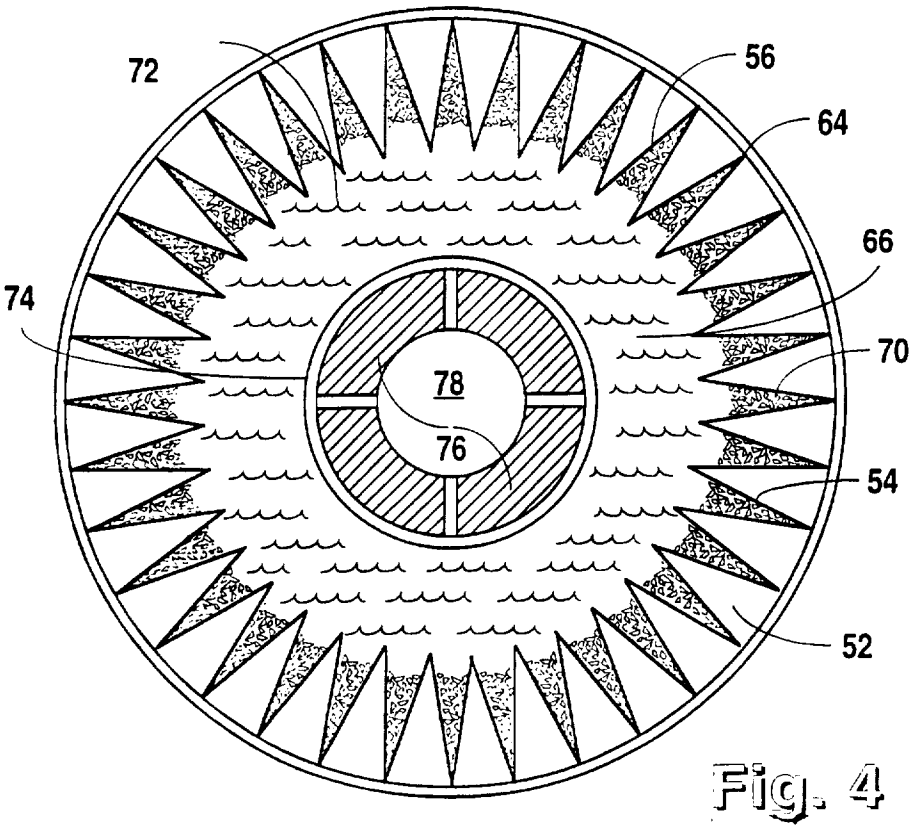

Fig. 4

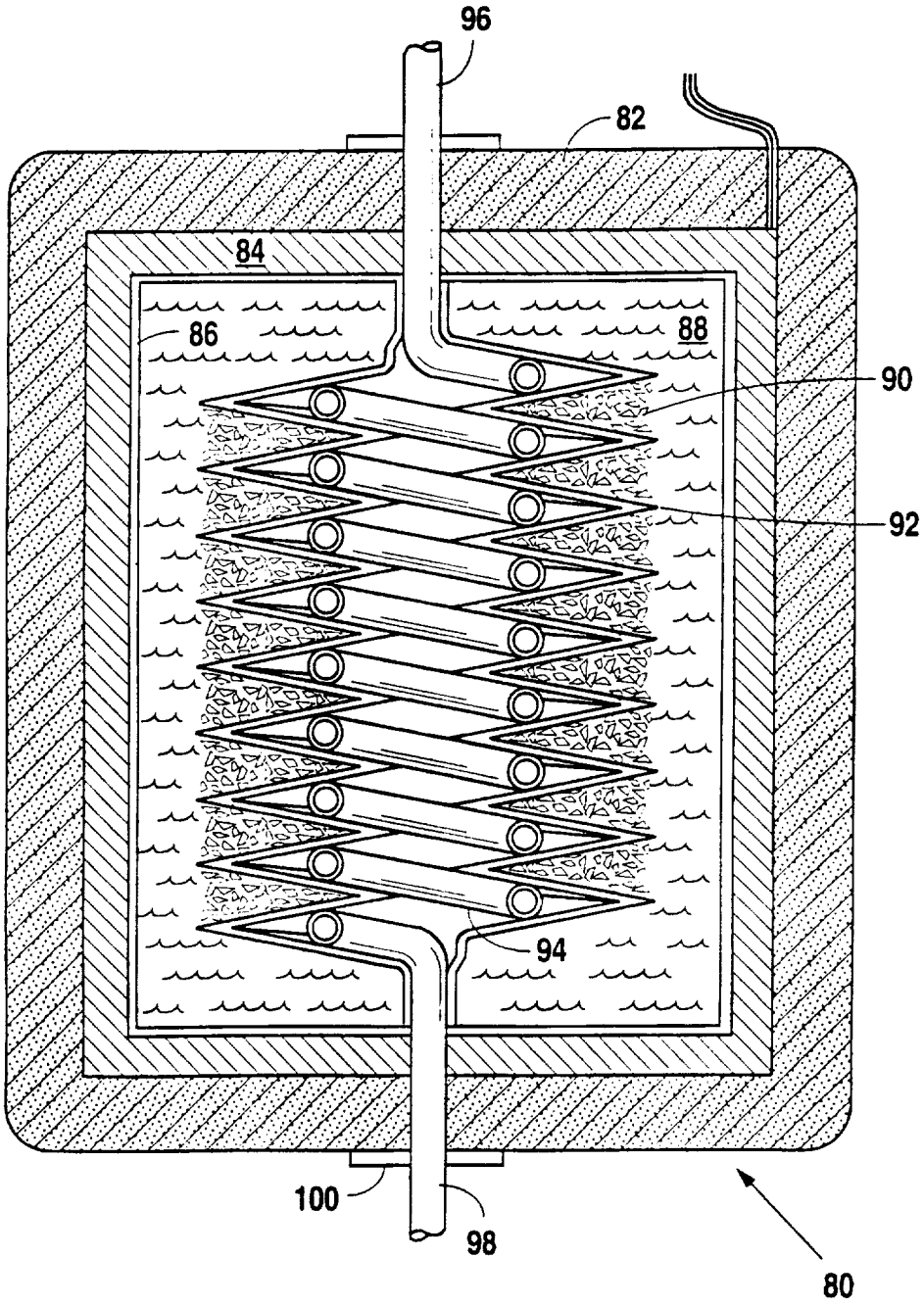

Fig. 5

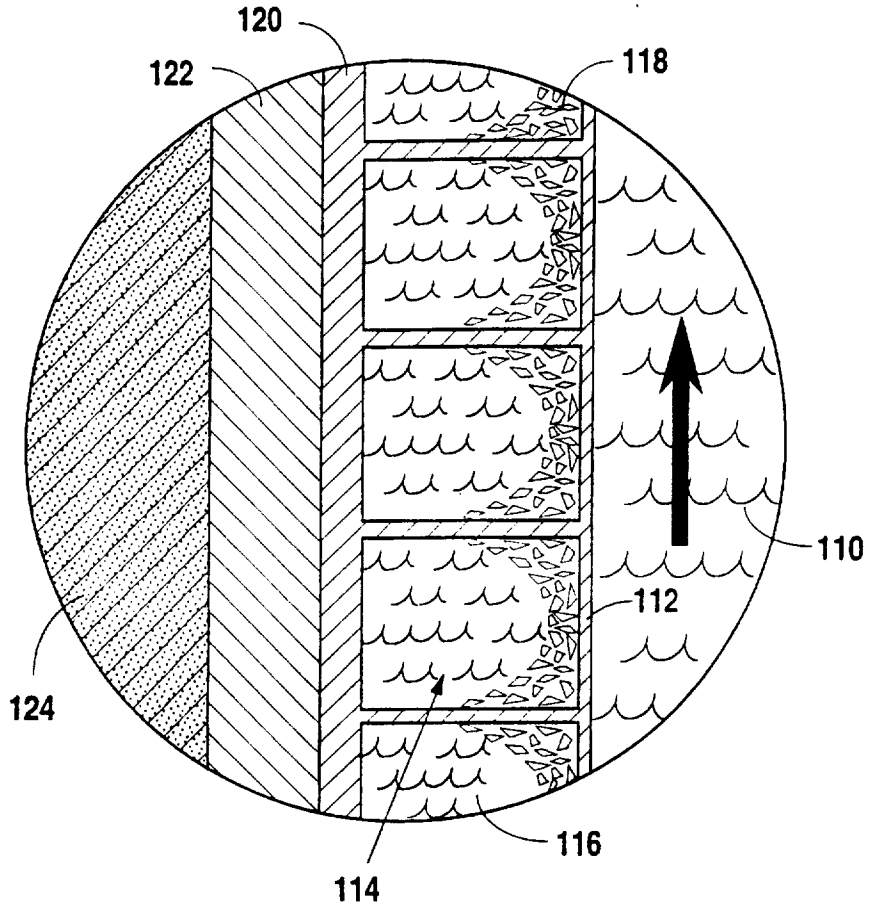
120
122
118
110
112
124
116
114

Fig. 6

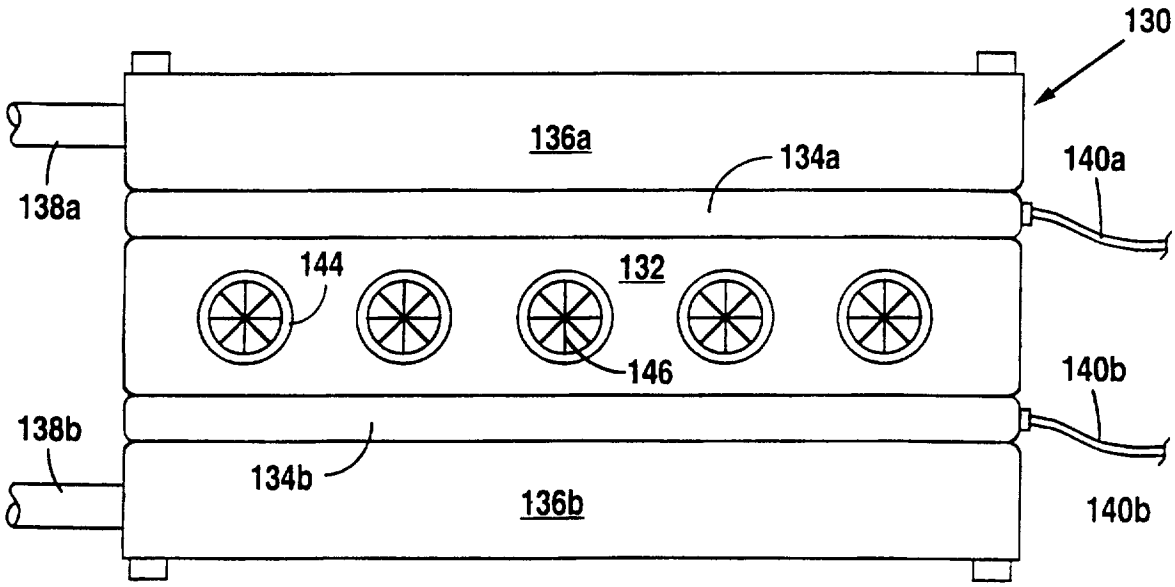
130
136a
134a
140a
138a
144
132
146
140b
138b
134b
136b
140b

Fig. 7

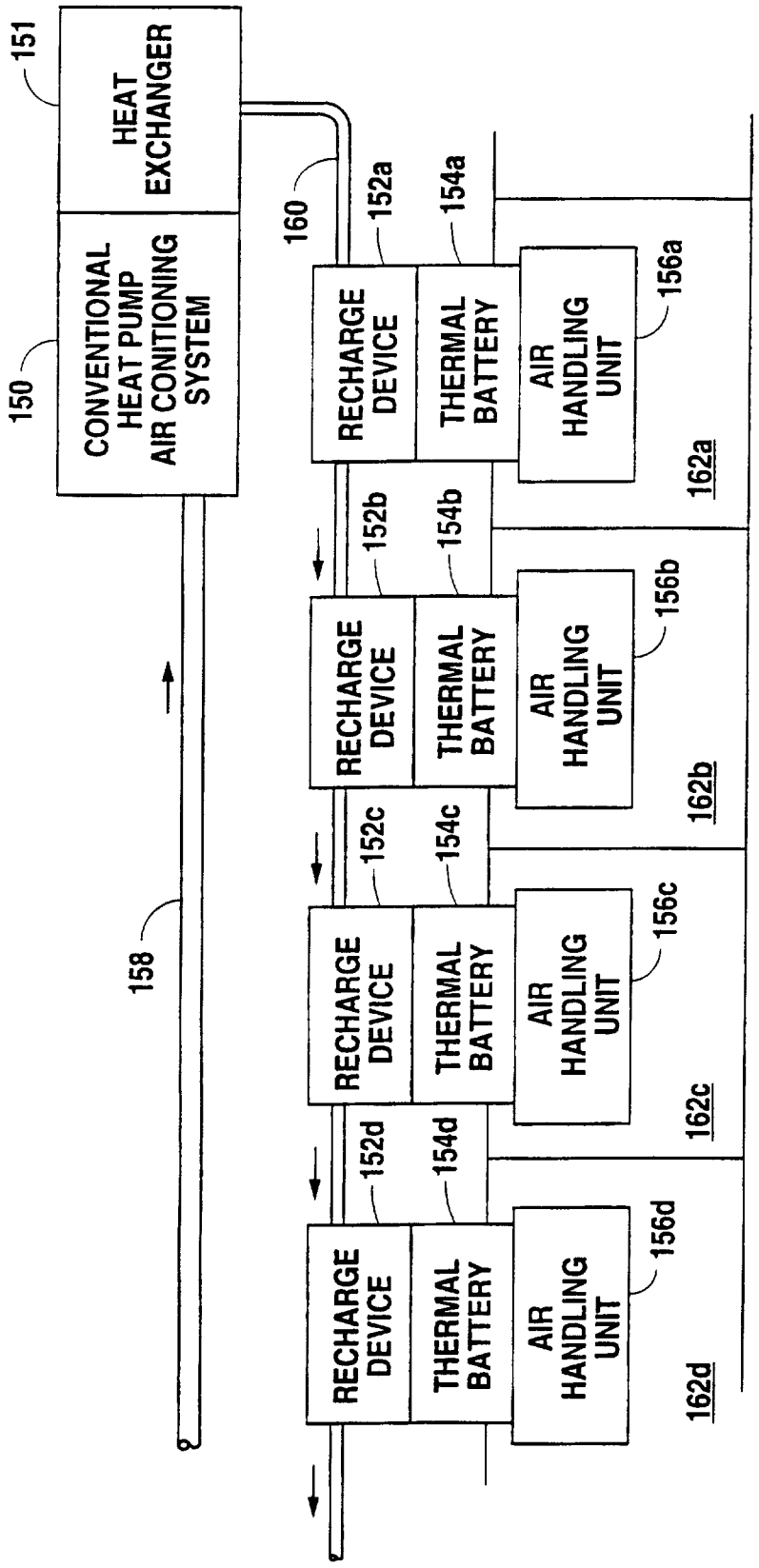
151
HEAT EXCHANGER
150
CONVENTIONAL HEAT PUMP AIR CONITIONING SYSTEM
160
158
152a
154a
RECHARGE DEVICE
THERMAL BATTERY
AIR HANDLING UNIT
156a
162a
152b
154b
RECHARGE DEVICE
THERMAL BATTERY
AIR HANDLING UNIT
156b
162b
152c
154c
RECHARGE DEVICE
THERMAL BATTERY
AIR HANDLING UNIT
156c
162c
152d
154d
RECHARGE DEVICE
THERMAL BATTERY
AIR HANDLING UNIT
156d
162d

Fig. 8

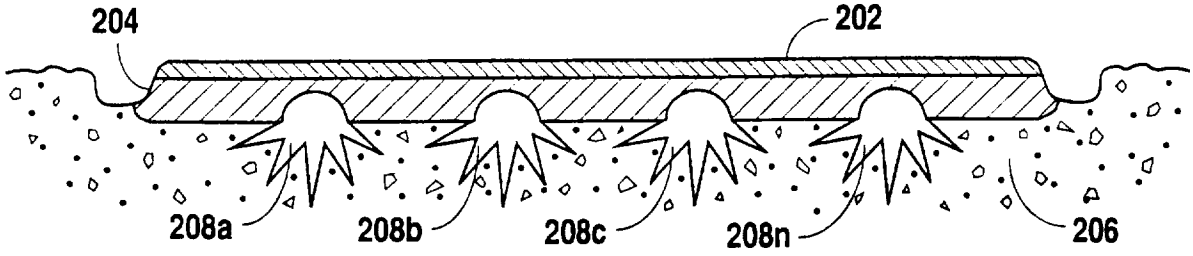

Fig. 9

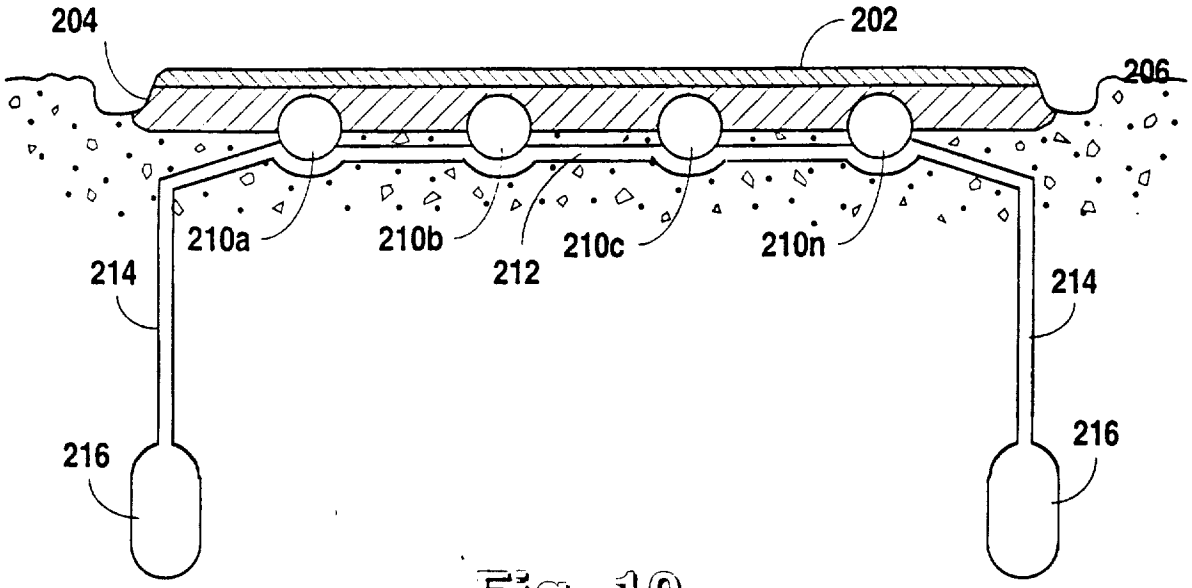

Fig. 10

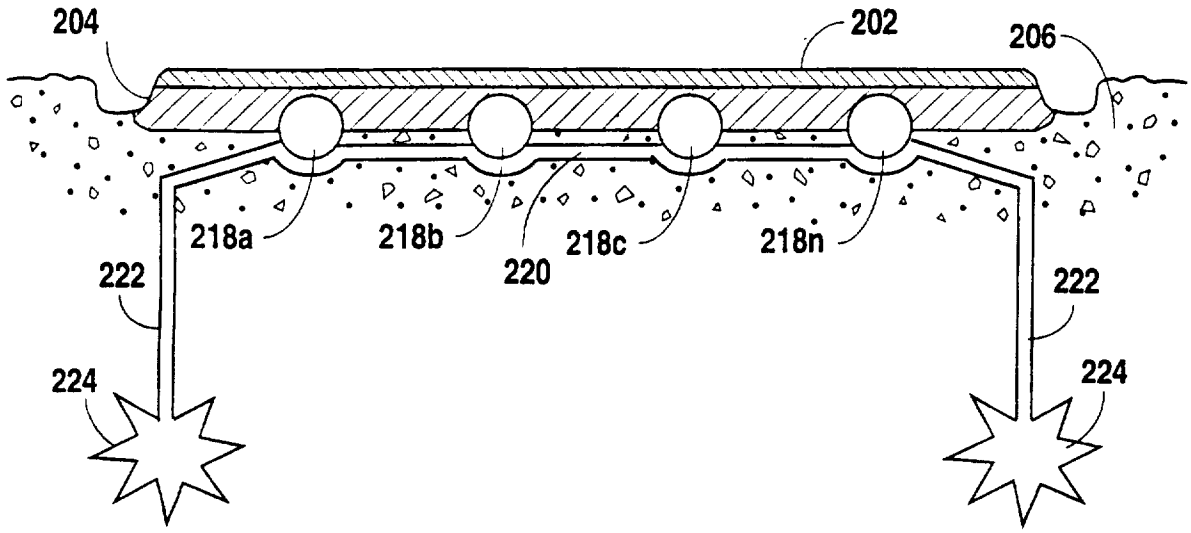

Fig. 11

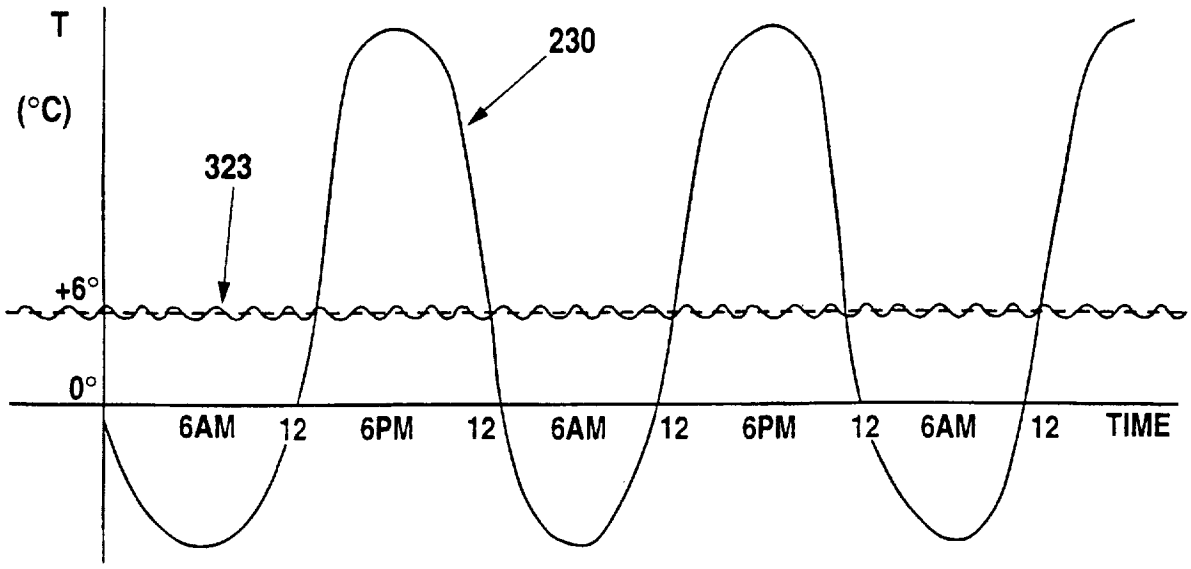
T
(°C)
230
323
+6°
0°
6AM
12
6PM
12
6AM
12
6PM
12
6AM
12
TIME

Fig. 12

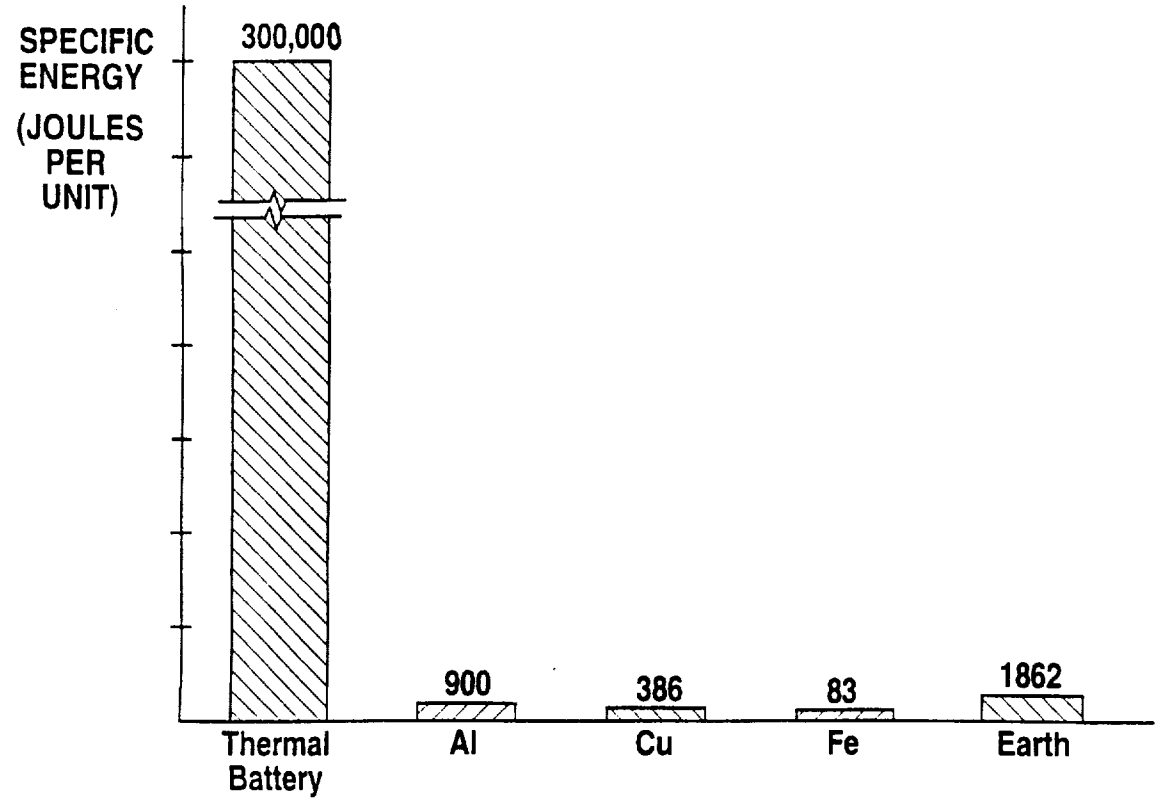
SPECIFIC ENERGY (JOULES PER UNIT)
300,000
900
386
83
1862
Thermal Battery
Al
Cu
Fe
Earth

Fig. 13

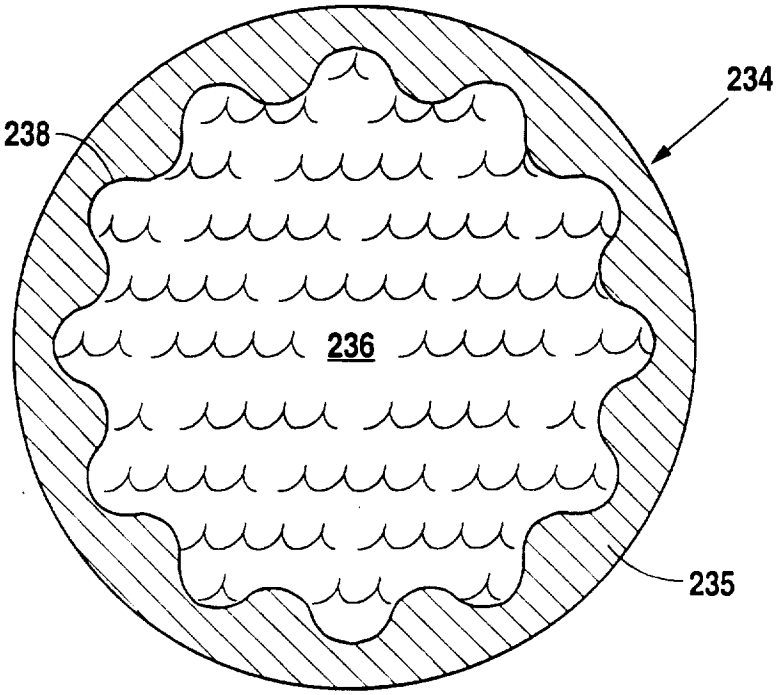

Fig. 13a

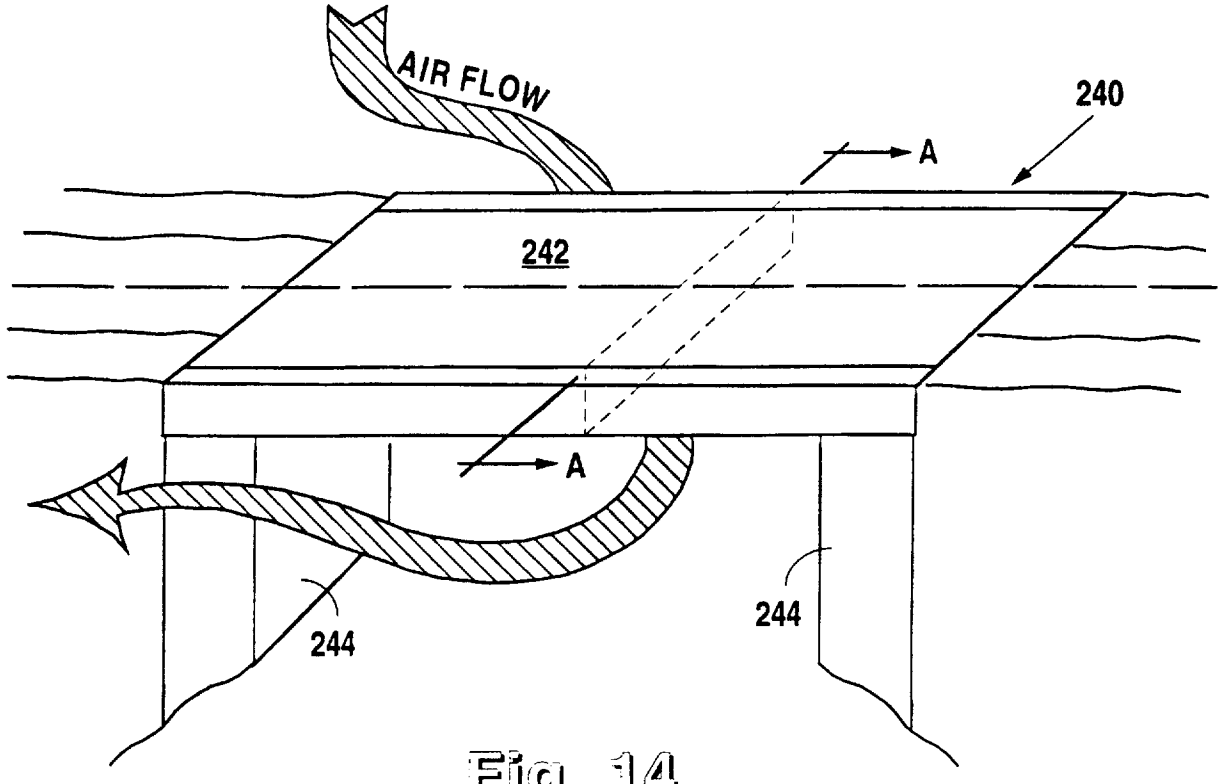

Fig. 14

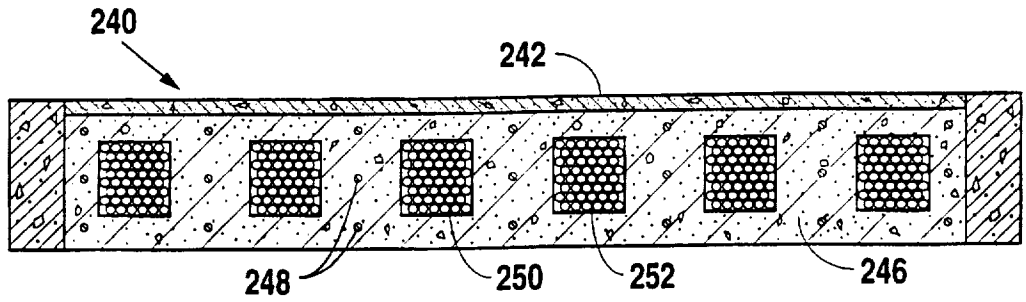

Fig. 15

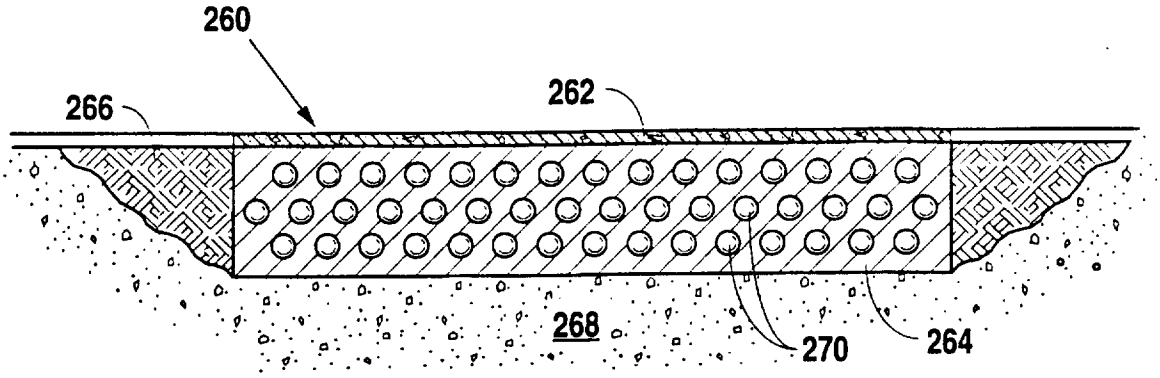

Fig. 16

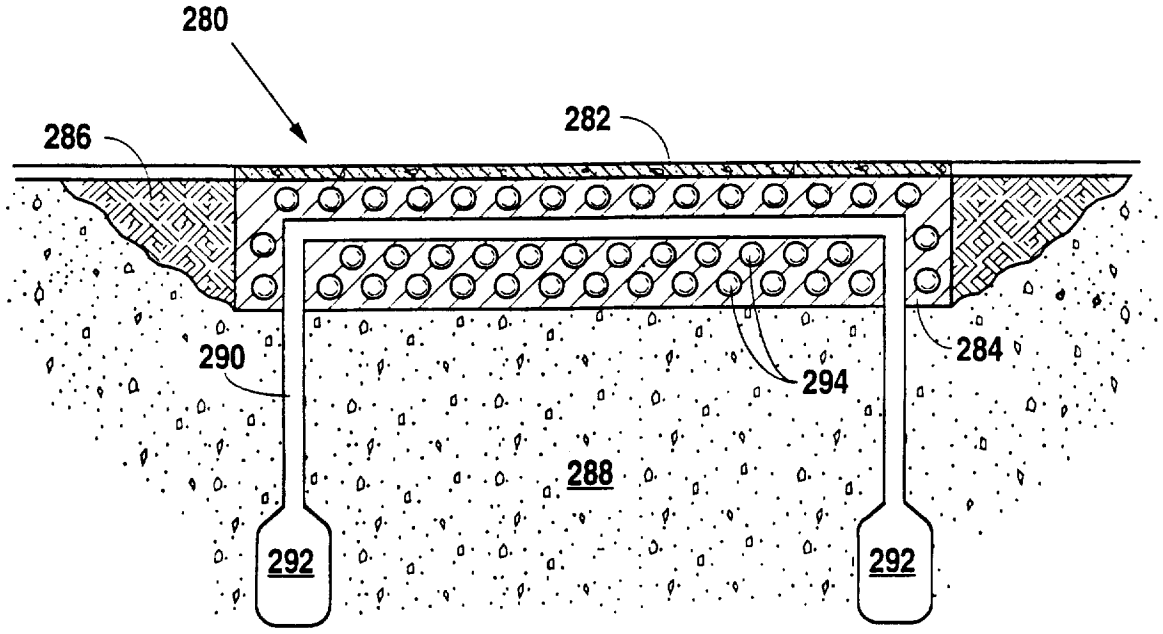

Fig. 17

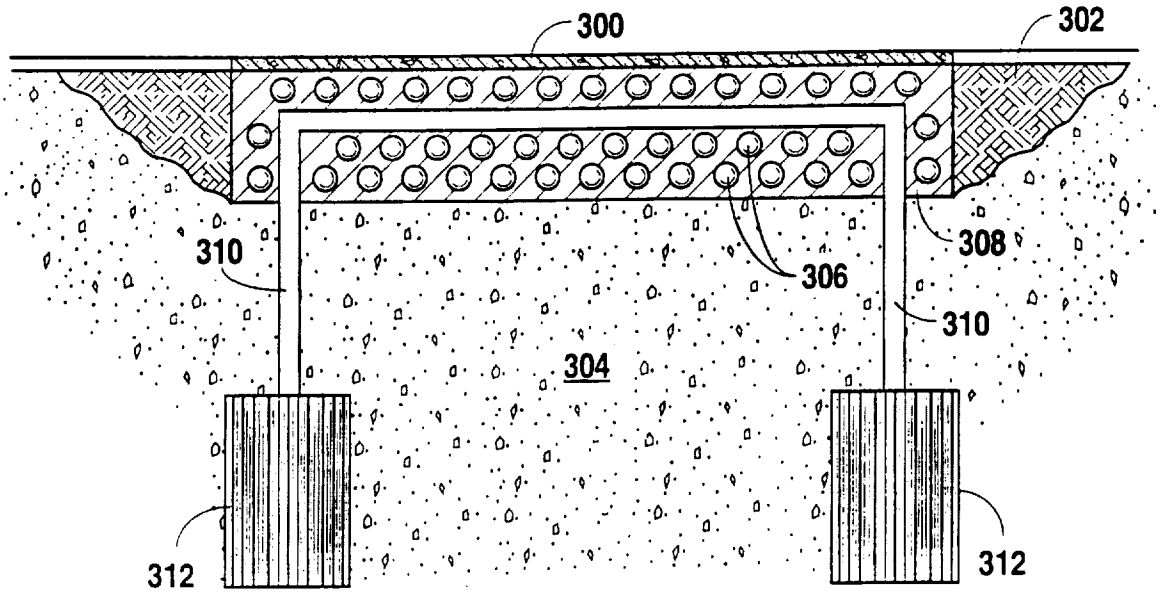

Fig. 18

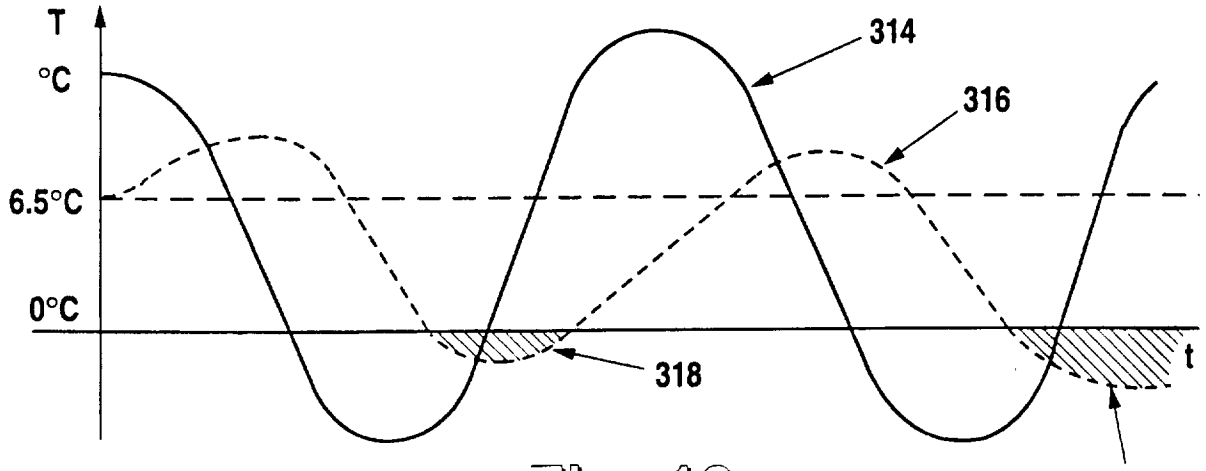

Fig. 19

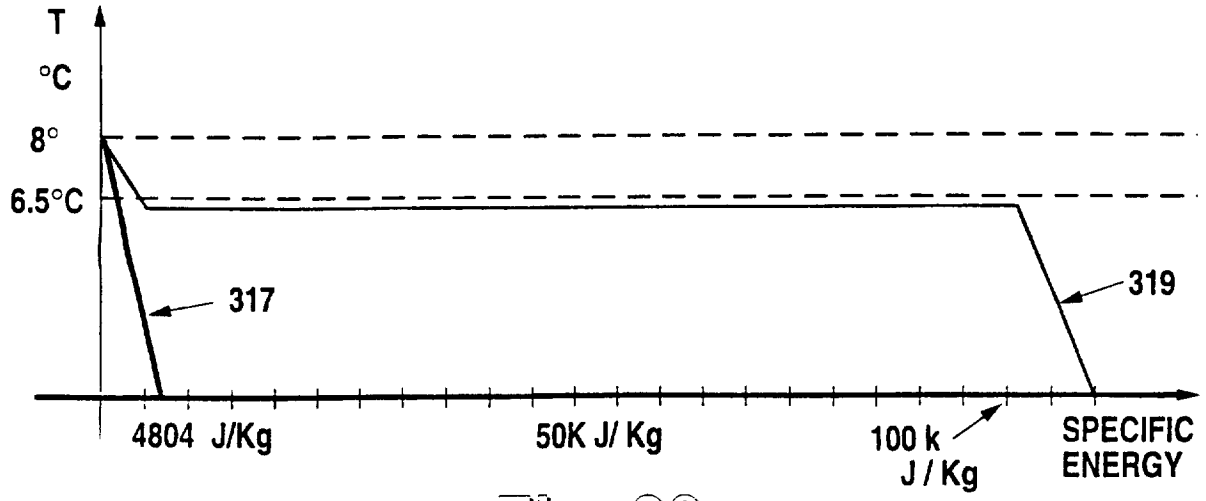

Fig. 20

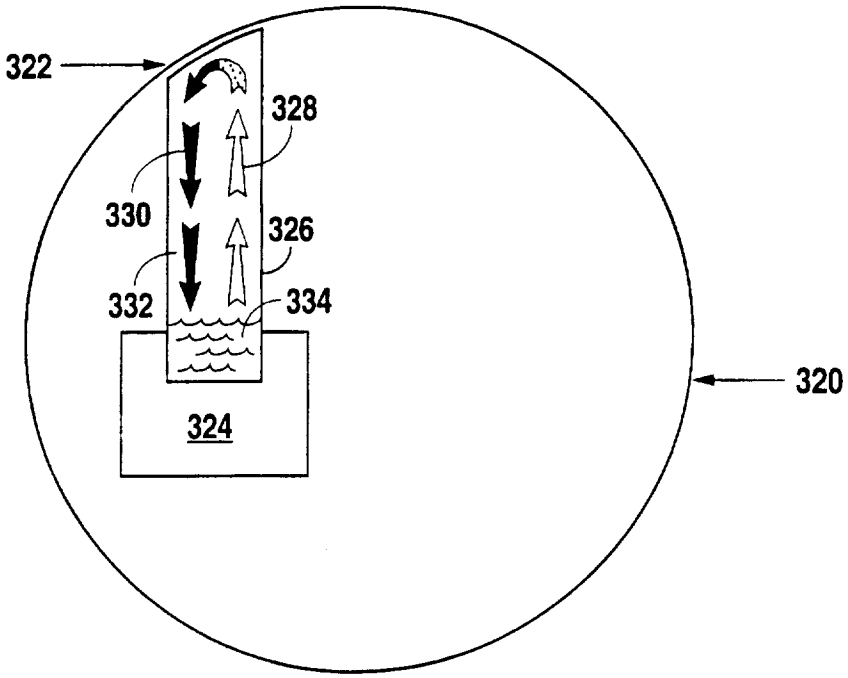

Fig. 21

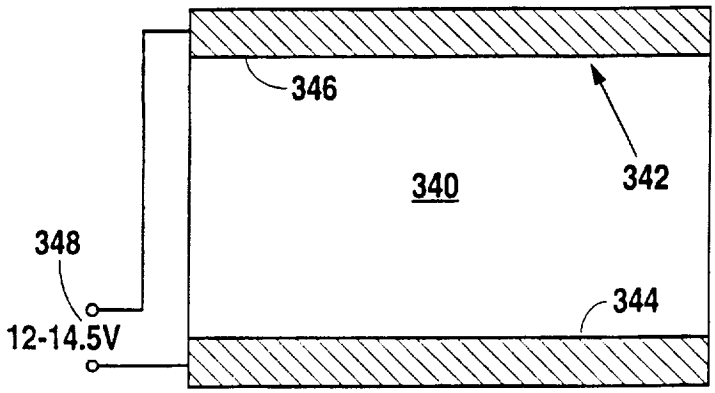

Fig. 22

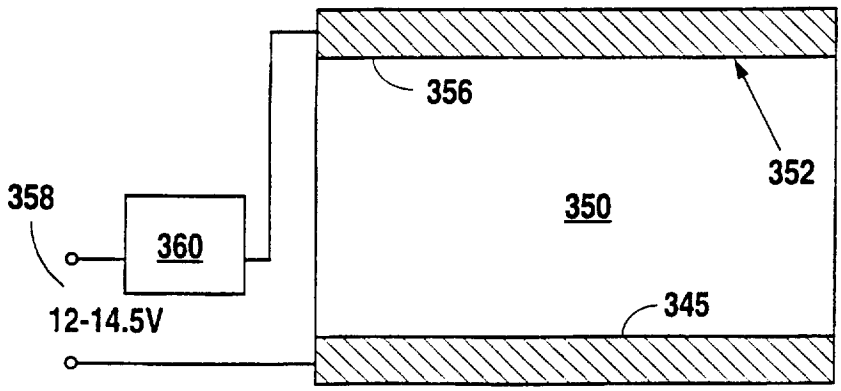

Fig. 23

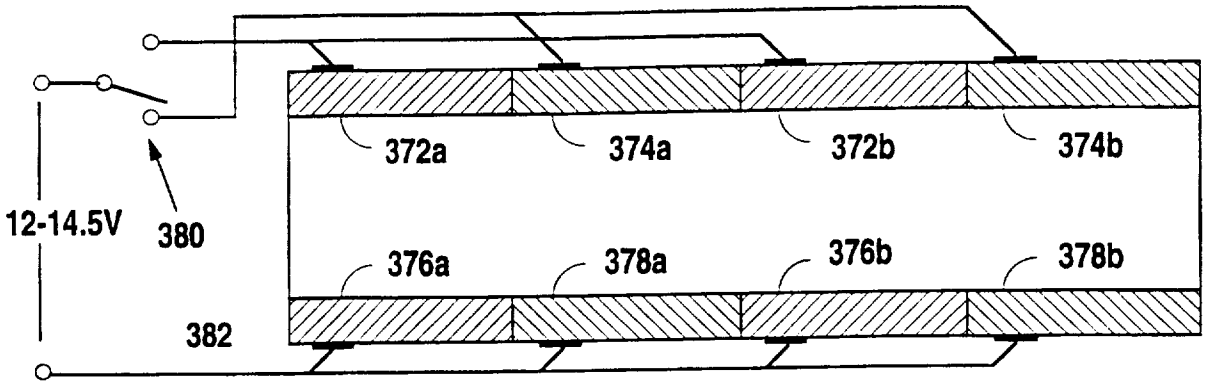

Fig. 24

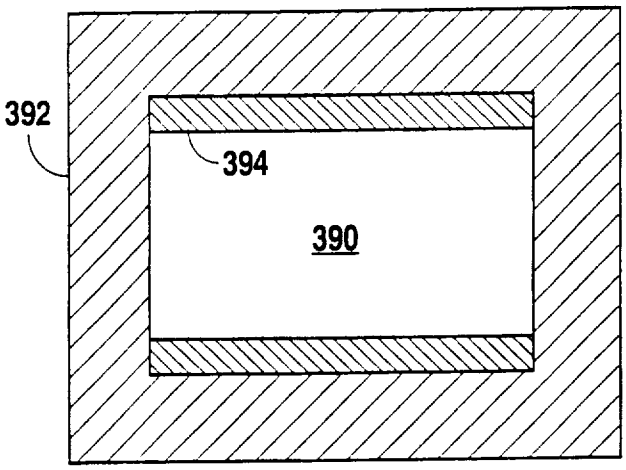

Fig. 25

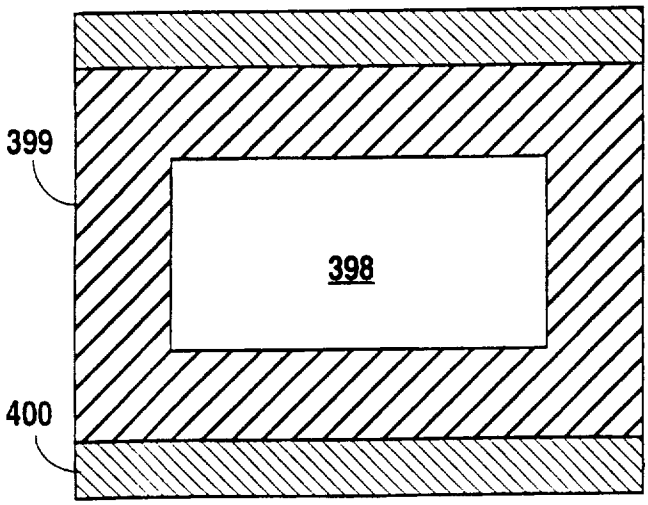

Fig. 26

INTERNATIONAL SEARCH REPORT

International application No.
PCT/US97/07219

A. CLASSIFICATION OF SUBJECT MATTER
IPC(6) :F28D 17/00
US CL :165/10, 236
According to International Patent Classification (IPC) or to both national classification and IPC

B. FIELDS SEARCHED

Minimum documentation searched (classification system followed by classification symbols)

U.S. : 165/10, 236

Documentation searched other than minimum documentation to the extent that such documents are included in the fields searched

Electronic data base consulted during the international search (name of data base and, where practicable, search terms used)

C. DOCUMENTS CONSIDERED TO BE RELEVANT

Category*	Citation of document, with indication, where appropriate, of the relevant passages	Relevant to claim No.
Y	US 5,553,662 A (LONGARDNER et al) 10 September 1996, see Figures 16-32.	1-24
Y	US 5,061,630 A (KNOFP et al) 29 October 1991, see Figure 2 and col. 4, lines 6 3-68.	1-24
A	US 4,850,424 A (MITANI et al) 25 July 1989, see Figures 1, 4 and 5.	1-24
A	US 4,977,953 A (YAMAGISHI et al) 18 December 1990, see Figures 1-7.	1-24

☐ Further documents are listed in the continuation of Box C. ☐ See patent family annex.

*	Special categories of cited documents:	"T"	later document published after the international filing date or priority date and not in conflict with the application but cited to understand the principle or theory underlying the invention
"A"	document defining the general state of the art which is not considered to be of particular relevance	"X"	document of particular relevance; the claimed invention cannot be considered novel or cannot be considered to involve an inventive step when the document is taken alone
"E"	earlier document published on or after the international filing date	"Y"	document of particular relevance; the claimed invention cannot be considered to involve an inventive step when the document is combined with one or more other such documents, such combination being obvious to a person skilled in the art
"L"	document which may throw doubts on priority claim(s) or which is cited to establish the publication date of another citation or other special reason (as specified)	"&"	document member of the same patent family
"O"	document referring to an oral disclosure, use, exhibition or other means		
"P"	document published prior to the international filing date but later than the priority date claimed		

Date of the actual completion of the international search 23 JUNE 1997	Date of mailing of the international search report 24 JUL 1997
Name and mailing address of the ISA/US Commissioner of Patents and Trademarks Box PCT Washington, D.C. 20231 Facsimile No. (703) 305-3230	Authorized officer J. Hurley for JOHN RIVELL Telephone No. (703) 308-2599

Form PCT/ISA/210 (second sheet)(July 1992)*