Oct. 4, 1966 W. J. PHYSIOC III 3,276,234

FREEZE PEENING APPARATUS AND METHOD

Filed July 11, 1963 3 Sheets-Sheet 1

Fig. 1.

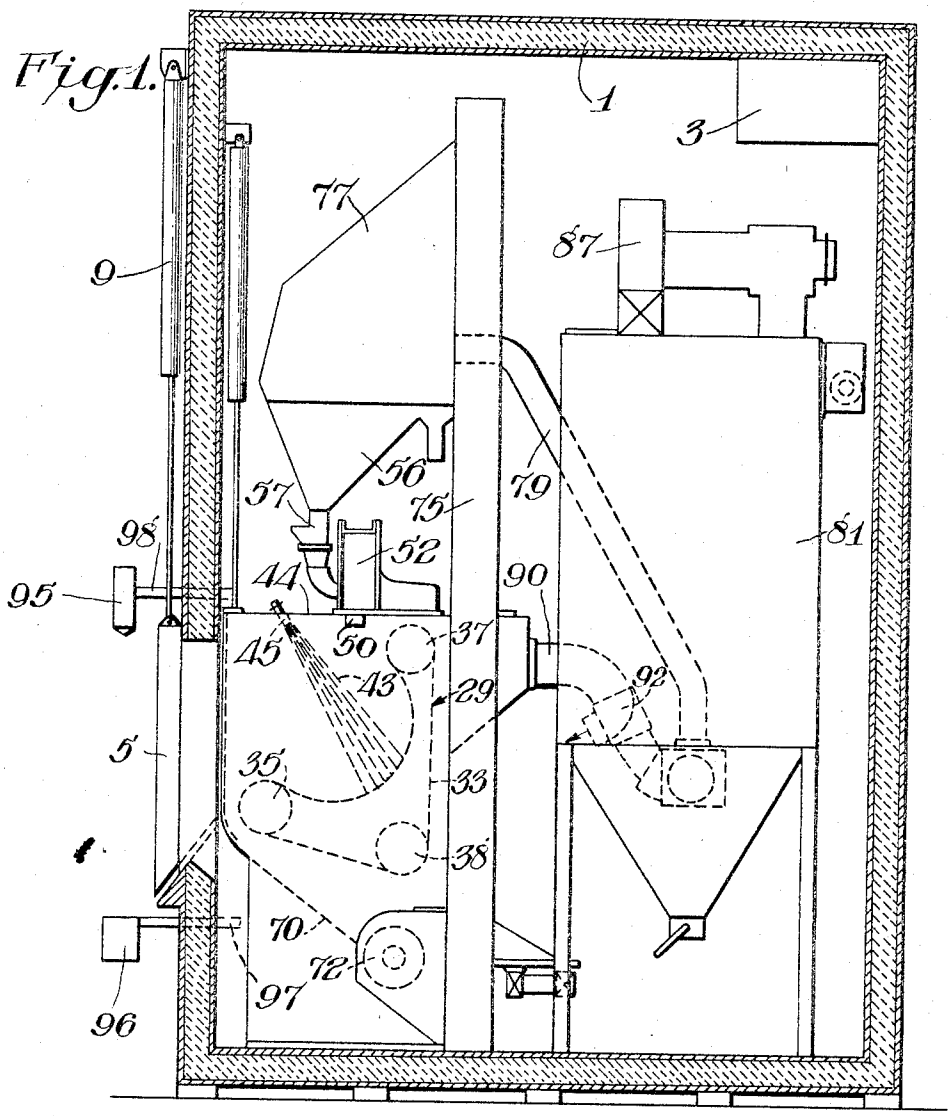

INVENTOR

Willis J. Physioc, III

BY Connolly and Hutz

ATTORNEYS

Oct. 4, 1966 W. J. PHYSIOC III 3,276,234

FREEZE PEENING APPARATUS AND METHOD

Filed July 11, 1963 3 Sheets-Sheet 2

Fig. 2.

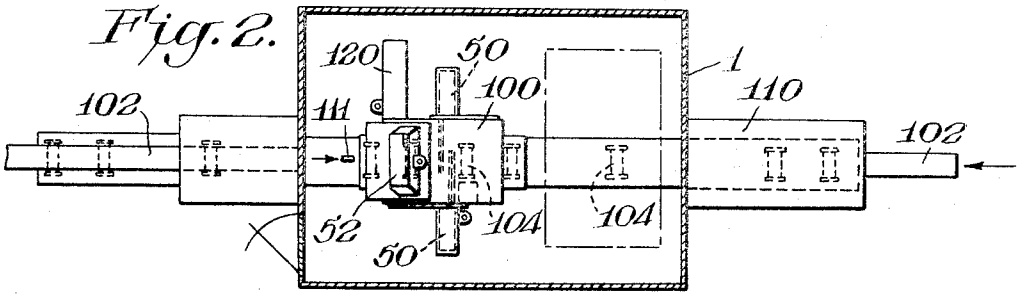

Fig. 3.

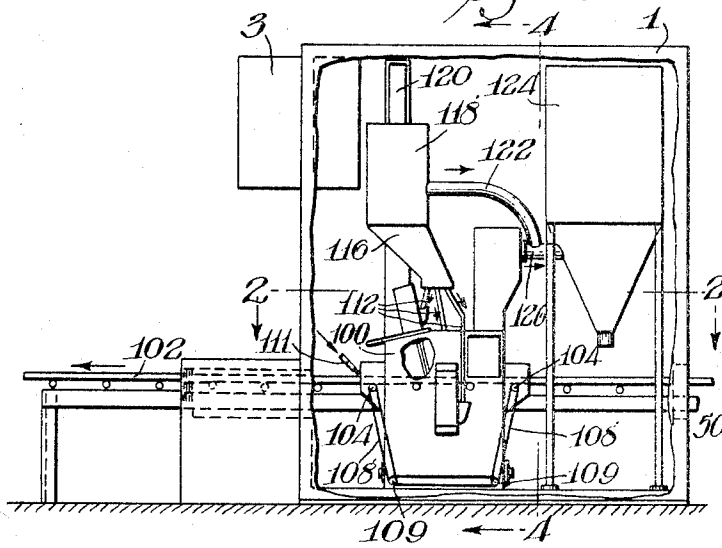

Fig. 4.

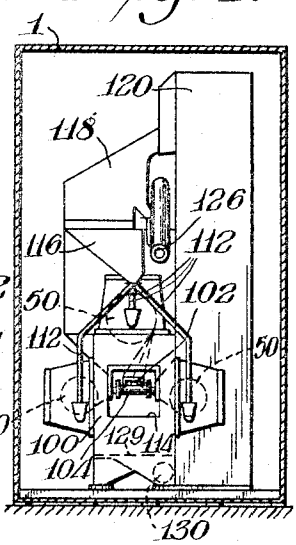

INVENTOR

Willis J. Physioc, III

BY Connolly and Hutz

ATTORNEYS

Oct. 4, 1966 W. J. PHYSIOC III 3,276,234

FREEZE PEENING APPARATUS AND METHOD

Filed July 11, 1963 3 Sheets-Sheet 3

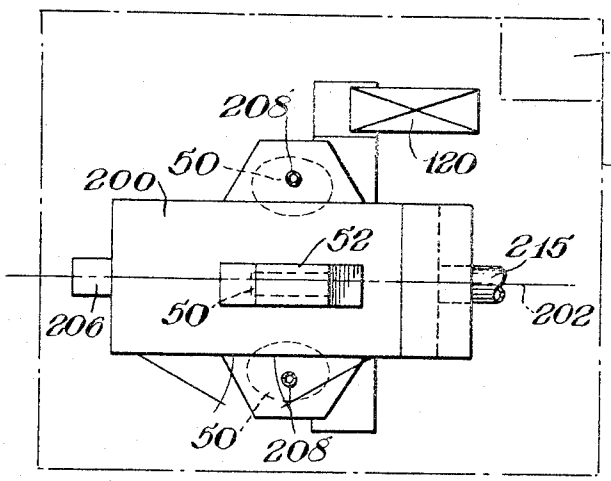

Fig. 5.

Fig. 6.

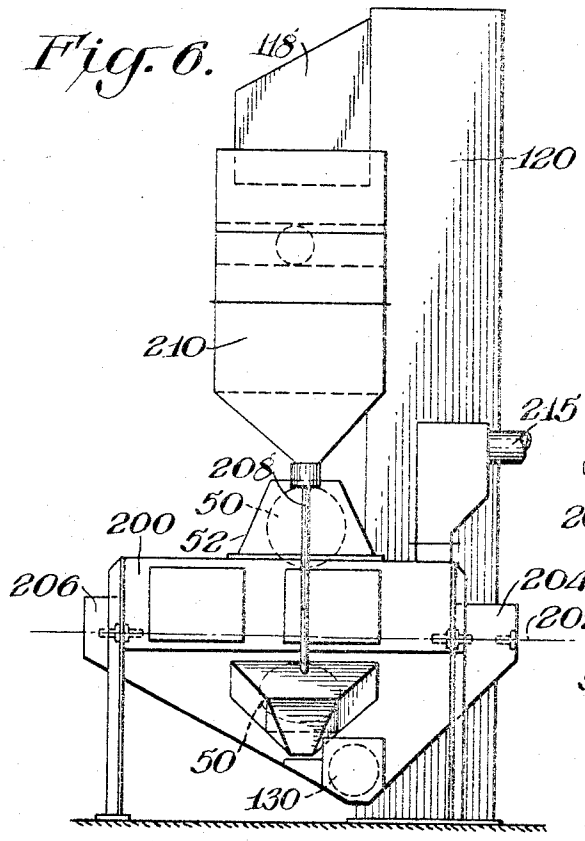

Fig. 7.

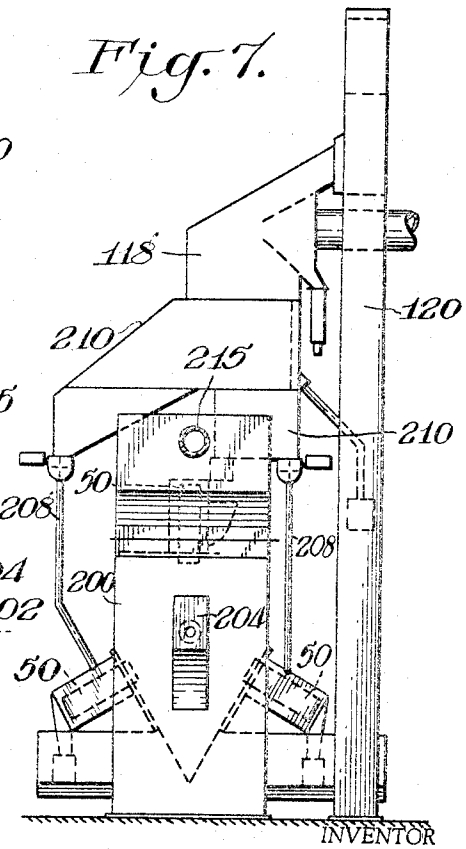

INVENTOR

Willis J. Physioc, III

BY Connolly and Hutz

ATTORNEYS

United States Patent Office 3,276,234 Patented Oct. 4, 1966

3,276,234

FREEZE PEENING APPARATUS AND METHOD

Willis J. Physioc III, Boonsboro, Md., assignor to The Pangborn Corporation, Hagerstown, Md., a corporation of Delaware

Filed July 11, 1963, Ser. No. 294,408
7 Claims. (Cl. 72—53)

The present invention relates to an apparatus and method for peening metal structures such as certain types of stainless steel wire, rods, flat sheet material, castings, fabrications, machinings and weldings by blasting these articles with shot particles while the articles are maintained at low temperatures of —40° F. or less.

It is known that the tensile strength of stainless steel can be increased substantially and to a high degree without loss of toughness by rolling at temperatures well below zero instead of at or above room temperature. Furthermore, the strength increases as the rolling temperature decreases. The explanation is that the tensile strength of the steels are strengthened by two mechanisms. One of these is cold working. The other is transformation of austenite to strain enduced ferrite. At room temperature only a relatively small amount of transformation can be effected. Consequently, a large amount of cold working is necessary to obtain a given high strength level. With decreasing work temperatures equivalent strength levels can be obtained with decreasing amounts of cold work since the tendency for the strain enduced transformation to occur becomes much greater.

It is, therefore, one object of the present invention to provide a method and apparatus for increasing tensile strength of stainless steel articles such as wires, flatwork, castings, etc., by blast peening these articles with shot while the articles are maintained at low temperatures of —40° F. or below.

Other objects and advantages of the invention will become apparent from a study of the following description and drawings wherein:

FIGURE 1 is a view partially in section of an apparatus which can be used in the present invention for cold peening of castings, machinings, weldings and other smaller steel units which can be treated in batch form;

FIGURES 2–4 are top, side and end views partially in section, respectively, of a cold peening apparatus which can be used for treating steel articles such as I-beams, channel structures, flatwork, tubes and pipes as well as other articles of this nature; and

FIGURES 5–7 are top, side and end views, respectively, of a wire peening apparatus which is housed in a refrigeration room shown in phantom in the top view of FIGURE 5.

A suitable form of apparatus is shown in FIG. 1 and this apparatus is used for cold peening small stainless steel objects in a batch type operation. This apparatus is more fully described and claimed in Patent 3,110,983, entitled "Method and Apparatus for Deflashing Molded Resilient Pieces" and Serial No. 248,026, filed December 28, 1962, entitled "Method and Apparatus for Deflashing Molded Resilient Pieces" now abandoned. Here is shown an overall housing 1 which serves as a refrigeration chamber or room in which the operating or peening units of the apparatus are housed. The housing 1 is formed of heavy walls with inner and outer sheets of plywood which form a sandwich structure with insulation such as Fiberglas positioned between the plywood sheets. The exterior of the housing 1 is clad with galvanized steel backers or sheets.

A refrigerating-dehumidifying unit 3 is supported in the upper right-hand corner of the housing for conditioning and cooling the air in the interior of the housing 1 to a temperature of —40° F. or lower.

In the front wall of the housing 1 there is a door 5 which can be raised or lowered to provide access to the housing for loading and unloading the steel parts which are to be or have been treated. A hoisting mechanism 9 raises and lowers the door 5.

The steel pieces to be cold peened are received into a trough shaped endless belt type conveyor 29. The conveyor 29 is preferably formed of metal bars or slats which extend transversely of the conveyor travel and are connected at their ends to a continuous sprocket chain 33. The belt 33 rotates around a front pair of guide sprockets 39 and a pair of rear drive sprockets 37. A pair of tension sprockets 38 also are installed in the chain system. Although it is not shown, a pair of guide discs are rotatably mounted in the side walls which enclose the sides of the conveyor or chain drive area and these guide discs contact the slats of the upper deck of the chain belt conveyor compelling the conveyor 29 to follow a concave path which resembles a trough laterally inclined so that it faces a door 5. This immediate structure described above is found adequately described in detail in the above-noted patent applications.

To aid in cooling the pieces to be cold peened, they are treated with a freezing medium spray 43 which can be liquid carbon dioxide, pulverized Dry Ice or other suitable freezing mediums such as liquid nitrogen. The conveyor 29 is in operation during the freezing step whereby the pieces are tumbled and turned on the belt 33 to expose all surfaces to the freezing action. The freezing medium is supplied to the nozzle 45 by a common header which extends through the side or top walls of the cabinet surrounding the conveyor trough 29.

For peening the cooled steel pieces, there is provided a rotary abrasive propelling wheel 50 supported in housing 52 attached to the roof top or wall 44 of the cabinet housing the conveyor. The wheel 50 is rotated at high speed to propel the abrasive media such as fine steel shot through an opening in the roof top 44 and against the steel pieces being tumbled in the trough-shaped conveyor. The abrasive media is supplied to the blasting wheel 50 through a storage bin 56 connected by passageway 57 to the wheel housing 52.

Debris removed from the steel pieces during the shot blasting operation drops through the slats of the conveyor 29 and onto the screen slide or chute 70, which permits only the shot and finer debris to pass therethrough. This shot drops further onto a screen conveyor or other conveying means such as a rotary screw conveyor (not shown) and is fed to a scalping drum 72 wherein the shot is further refined from the coating or scale, etc. removed from the steel pieces being peened or worked.

From the scalping drum 72 the shot is passed into an elevator 75 which raises the abrasive upwardly to a separator 77 of an air-wash type. The supply of air for the separator is provided by the suction air being discharged from the dust-collector, to be described, and from the separator 77. The shot then passes down into the storage bin 56 from which it passes again to the shot throwing wheel 50.

The conduit 57 includes a suitable metering and purge gate assembly (not shown but described in the above applications) for metering the shot to the wheel.

From the separator 77 the moving air stream containing the contaminants removed from the shot passes through delivery pipe 79 to a dust collector or filter assembly 81. The dust-laden air stream is then filtered through a series of dust bags (not shown) in the assembly 81 with the air stream being drawn by the fan 87 mounted on top of the collector. The filtered air is then discharged by the fan.

In addition, contaminated air is fed to the dust collector 81 through outlet 90 leading off from the area sur-

rounding the conveyor **29**. This removes any dust from the shot working area.

When unloading or loading the conveyor **12**, the ventilation of the conveyor area through outlet **90** is cut off by damper **92**. This prevents drawing warm air from outside into the cooling system. The damper **92** must be opened during the blasting operation, however, to provide ventilation. However, the damper is also closed during the liquid carbon dioxide application against the steel pieces being peened. This prevents drawing the cooled air away from the treating area.

It should be pointed out that all of the above elements described are found in patent applications Serial No. 242,750, filed December 6, 1962 and Serial No. 248,026, filed December 28, 1962 mentioned above, now abandoned.

If desired, an air curtain can be provided across the doorway when the door **5** is in raised position during loading or unloading of the steel pieces being treated. The air curtain prevents cold air from being discharged through the doorway and prevents warm air from entering through the doorway. As seen in FIG. 1, an air supply nozzle **95** is provided and propels a curtain of air over the doorway downwardly to collector **96** which picks up the air and recirculates it through the line **97** through the housing **1** back to the line **98** leading to the nozzle **95**. The details and structure of the air curtain apparatus are described more fully and claimed in patent application Serial No. 248,026, filed December 28, 1962 and entitled "Method and Apparatus for Deflashing Molded Resilient Pieces," now abandoned.

FIGS. 2 through 4 show a freeze peening apparatus which can be used for treating steel articles such as angle irons, I-beams, channel pieces, flatstock, tubes and pipes. As seen therein, the refrigeration room refrigerated by unit **3** (FIG. 3) houses a shot working chamber **100** having three abrasive throwing wheels **50** connected therewith. One wheel **50** is positioned at the top of the shot working cabinet and one wheel is supported on each side thereof. With this arrangement shot is applied to the work piece **102** being peened, which is seen as a channel piece in FIG. 4, from the top, sides and underside of the piece. The article **102** is supported on driven rollers **104** for moving the article through the refrigeration chamber **1** and the shot working chamber **100**.

The work conveyor rolls **104** are driven through driven belts **108** from drive rolls **109**, two of which are shown in FIG. 3.

As shown in FIG. 2 a precooling vestibule **110** is preferably provided for precooling the stock **102** before it enters the refrigeration room **1**. The vestibule is preferably maintained at a temperature of about 30° F. A blow-off jet **111** provides a blast of air to remove scale or debris still clinging to the work piece **102** as it emerges from the treating zone (see FIG. 3).

The blast wheels **50** are fed shot through feed lines **112** as shown better in FIGS. 3 and 4.

The feed pipes **112** are fed from hopper **116** which in turn receives the shot from the air separator **118** fed with shot by the elevator **120**.

Openings **114** (FIG. 4) are provided at either end of the shot working cabinet **100** to permit entry and exit of the work piece **102**.

An exhaust line **122** leads off from the air separator **118** to a dust collector **124**. In addition, air is exhausted from the shot working area through exhaust line **126** (FIG. 3) which is in turn connected to the dust collector **124** also.

As shown in FIG. 4, shot and debris is collected and

refined by the screen **128** and the scalping drum **130** which passes the shot to the elevator **120**.

The apparatus shown in FIGS. 5 through 7 is designed for cold peening wire and continuous filamentary material of certain stainless steels.

As seen in FIG. 5, the refrigeration room **1** is positioned around the shot working unit. The refrigerating unit **3** is supported at one corner of the housing **1** as shown in FIG. 5.

In this embodiment there is a shot working cabinet **200** which supports three shot throwing wheels **50** in a manner somewhat similar to that shown in FIGS. 2 through 4.

The wire **202** being treated is passed through the treating cabinet, leaving and entering the same through a special sealed entrance and exit **204** and **206** (FIG. 6) which are described and claimed in detail in Patent 3,160,991.

The abrasive is fed to the three blast wheels **50** through feed pipes **208** which lead off from the supply hopper **210** for the shot particles. The shot is collected at the bottom of the treating cabinet **202**, as with the prior embodiments, and the scalping drum **130** passes the shot to the elevator **120** from which it passes into the air wash separator **118**.

The blast cabinet **200** is ventilated to a dust collector (not shown) through conduit **215** (see FIG. 6) and in similar manner the air wash separator is vented into the dust collector.

Other embodiments and advantages of the invention are possible, of course, and come within the scope of the appended claims. In other words, the invention is not to be limited to the specific embodiments herein shown and described.

What is claimed is:

1. Apparatus for cold peening steel work pieces comprising a refrigerated room, an abrasive blasting chamber in said room, means extending through the walls of said room and said blasting chamber for conveying said work pieces into, through and out of said room and chamber, and means connected with said blasting chamber for applying shot against said work pieces in such a manner that surfaces of said pieces are completely cold worked.

2. The apparatus of claim **1** wherein the conveying means is a driven roller conveyor.

3. The apparatus of claim **1** wherein a plurality of shot applying means are connected with said shot blasting chamber.

4. The apparatus of claim **3** wherein one shot applying means is connected with the top of said blasting chamber, and one applying means is connected with each side of said blasting chamber.

5. The apparatus of claim **1** wherein the blasting chamber is ventilated to a dust filter.

6. The apparatus of claim **1** wherein an elevator returns used shot to an air separator in which debris is removed from the shot.

7. The apparatus of claim **6** wherein the air separator is ventilated to a dust filter.

References Cited by the Examiner

UNITED STATES PATENTS

602,416	4/1898	McCool	148—4
2,719,387	10/1955	Fahrney	51—4
2,996,846	8/1961	Leliaert	51—13
3,012,455	12/1961	Kline	78—46

FOREIGN PATENTS

662,522	12/1951	Great Britain.

CHARLES W. LANHAM, *Primary Examiner*.