(19) Europäisches Patentamt
European Patent Office
Office européen des brevets

(11) Publication number: **0 178 844**
B1

(12) EUROPEAN PATENT SPECIFICATION

(45) Date of publication of patent specification: **19.12.90**

(51) Int. Cl.[5]: **H 04 N 5/44**, H 04 N 17/04

(21) Application number: **85307222.1**

(22) Date of filing: **09.10.85**

(54) Television receivers.

(30) Priority: **16.10.84 JP 217036/84**

(43) Date of publication of application:
23.04.86 Bulletin 86/17

(45) Publication of the grant of the patent:
19.12.90 Bulletin 90/51

(84) Designated Contracting States:
DE FR GB NL

(56) References cited:
US-A-4 277 797

FUNK-TECHNIK, vol. 38, no. 5, 1983, Munich, Heidelberg THOMAS FISCHER:"Schaltungstecknik eines Fernsehgerätes mit DIGIVISION", pages 189-190

ELECTRONICS, Sept. 8, 1983, New York ROLF DEUBERT:"Digital prowess increases in color television sets", pages 131-133

(73) Proprietor: **SONY CORPORATION**
7-35 Kitashinagawa 6-Chome Shinagawa-ku
Tokyo 141 (JP)

(72) Inventor: **Itabashi, Takao c/o Sony Corporation**
Patents Division 6-7-35 Kitashinagawa
Shinagawa-ku Tokyo 141 (JP)
Inventor: **Saito, Junya c/o Sony Corporation**
Patents Division 6-7-35 Kitashinagawa
Shinagawa-ku Tokyo 141 (JP)
Inventor: **Ichikawa, Norihito c/o Sony Corporation**
Patents Division 6-7-35 Kitashinagawa
Shinagawa-ku Tokyo 141 (JP)
Inventor: **Yamada, Hisafumi c/o Sony Corporation**
Patents Division 6-7-35 Kitashinagawa
Shinagawa-ku Tokyo 141 (JP)

(74) Representative: **Cotter, Ivan John et al**
D. YOUNG & CO. 10 Staple Inn
London WC1V 7RD (GB)

Note: Within nine months from the publication of the mention of the grant of the European patent, any person may give notice to the European Patent Office of opposition to the European patent granted. Notice of opposition shall be filed in a written reasoned statement. It shall not be deemed to have been filed until the opposition fee has been paid. (Art. 99(1) European patent convention).

Courier Press, Leamington Spa, England.

EP 0 178 844 B1

Description

This invention relates to apparatus and methods for use with a television receiver that processes a television signal in digital form.

Colour television receivers or sets are known in which the majority of signal processing that takes place therein is carried out digitally. That is, a video or television signal is received in a conventional fashion using a known analog tuning circuit and then, following the tuning operation, the received analog television signal is converted into a digital signal and digitally processed before subsequently being converted back to an analog signal for display on a colour cathode ray tube.

A colour television set of the above kind is described in an article by Thomas Fischer entitled "Schaltungtechnik eines Fernsehgeraetes mit DIGIVISION (Circuitry of a television set with DIGIVISION) appearing at pages 189 and 190 of FUNK-TECHNIK, Vol. 38, No. 5, 1983, Munich, Heidelberg. The set described in the article comprises a central control unit (CCU) which supplies control and setting values, for example of loudness, colour saturation or frame height, to digital audio and video signal processors. The central control unit comprises a microcomputer; and a non-volatile memory which is programmed during production of the set with balance values for the chassis and in which the user can store (by way of a keyboard or remote control commander) desired setting values and desired channels.

Although digital signal processing has many advantages over conventional analog signal processing, one problem that is presented by digital signal processing relates to the state of the circuitry at the time immediately following the manufacture of the television set or receiver or following servicing of the set by a repair technician. Although conventional analog components and signal processing elements can be set easily to an appropriate value, such as a midpoint of a range, at the time of manufacture, and such values will be held until adjusted later, digital circuits employing memory units, registers, and so forth do not have any initial settings and, indeed, cannot be set initially in the absence of some sort of digital pre-programming source. Examples of some of the various parameters that may be preset in the digital circuitry of a colour television receiver are contrast, brightness, hue, colour saturation degree, white balance and, perhaps most importantly, horizontal and vertical deflections. The problem arises that if the television receiver is turned on before appropriate initial values are set for the above-identified parameters, it is quite possible that random or zero values present in the digital memories may be abnormal and outside of tolerable limits. Such abnormal values then would cause adverse influence on appropriate circuit portions. For example, were the horizontal and vertical amplitudes increased or horizontal and vertical oscillation frequencies decreased drastically, there is a good likelihood that the horizontal or vertical output circuits will be destroyed.

According to the invention there is provided apparatus for use with a television receiver that processes a television signal in digital form under control of digital data stored in at least one register of the receiver, the apparatus comprising:

memory means operably connected to the television receiver for storing predetermined receiver initialisation or initial control data; and

control means connected to the television receiver for controlling the memory means and the at least one register to set said predetermined receiver initialisation or initial control data stored in the memory means into the at least one register at a first time the television receiver is operated.

The invention also provides a method for use with a television receiver that processes a television signal in digital form under control of digital data stored in a register of the receiver and including an adjusting controller, the method comprising the steps of:

providing a non-volatile, non-rewritable memory means containing initial set data;

determining whether the receiver is in an adjusting mode; and

reading out the initial set data from the memory means into the register of the receiver when the receiver is determined to be in the adjusting mode for controlling the receiver in accordance with the initial set data at a first time power is applied thereto.

The use of such stored predetermined initialisation or initial control data can eliminate or at least alleviate the above-noted defects. Specifically, it can prevent circuit portions of the receiver from having undue signal levels and/or frequencies impressed thereon as a result of abnormal initial settings.

Preferably, memory units associated with one or more microcomputers utilised as part of the receiver are provided to accommodate the desired initial control data.

Preferably, the initial control data is selected statistically to be average data and such data is entered at the very first time a power switch of the television receiver is turned on. Such specific data initialisation also can occur following a servicing operation on the receiver.

The invention will now be further described, by way of illustrative and non-limiting example, with reference to the accompanying drawings, in which like references indicate like elements or parts throughout, and in which:

Figure 1 is a schematic block diagram of an example of a previously proposed television receiver having digital signal processing capabilities;

Figure 2 is a schematic block diagram of a portion of the television receiver of Figure 1 modified according to an embodiment of the present invention;

Figure 3 is a logical flow chart useful in explaining the operation of the modified digital television receiver of Figure 2; and

Figure 4 is a schematic block diagram of another embodiment of the present invention.

A block diagram showing an example of a previously proposed colour television receiver, in which the majority of signal processing is carried out in a digital fashion, is shown in Figure 1. An incoming television signal is received by an appropriate aerial (antenna) or fed in through a cable to a tuner or tuner section 1 of the receiver. The tuner 1 is only generally represented in Figure 1, because the elements contained therein can be conventional. Assuming that the tuner 1 contains the appropriate circuit elements up to a video detecting circuit, then the tuner 1 will produce a composite video signal Sv, which is converted to a digital signal by an analog-to-digital (A/D) converter 2. The digitally converted composite video signal is then fed to a comb filter 3 which produces an output signal which is fed to a digital high-pass filter 4 which separates a digital luminance signal Y_D from the composite digital video signal S_V. The digital luminance signal Y_D is fed to a luminance signal processor or processing circuit 5Y, in which it is processed for contrast, grey scale values, and the like, as is known in conventional, digital, video signal processing. Thereafter, the processed digital luminance signal Y_D is reconverted back to an analog luminance signal Y in a digital-to-analog (D/A) converter 6Y and then is fed to a matrix circuit 7. The composite digital video signal from the comb filter 3 is fed also to a bandpass filter 8 which is operative to separate a digital carrier chrominance signal C_D from the composite video signal. The digital carrier chrominance signal C_D is fed to a chrominance signal processor or processing circuit 5C, in which automatic colour control, hue, colour saturation degree, and so on respectively are adjusted. Thereafter, the adjusted digital chrominance signal C_D is fed to a colour demodulating circuit 9, which produces a digital red colour difference signal (R_D—Y_D) and a digital blue colour difference signal (B_D—Y_D). The red and blue colour difference signals (R_D—Y_D) and (B_D—Y_D) are supplied to digital-to-analog (D/A) converters 6R and 6B, respectively, converted into analog colour difference signals (R—Y) and (B—Y), respectively, and fed to the matrix circuit 7. Outputs of the matrix circuit 7 represent red (R), green (G), and blue (B) signals, which are fed to a red adder 10R, a green adder 10G, and a blue adder 10b, in order to perform white balance. Outputs from the adders 10R, 10G, and 10B are fed to brightness adjusting amplifiers 11R, 11G, and 11B, respectively, and outputs from these amplifiers are fed via respective signal drive amplifiers 12R, 12G and 12B to a conventional colour picture tube or colour cathode ray tube (CRT) 13 for display.

As in a conventional (analog) television receiver, the composite video signal from the tuner 1 is fed also to a sync separator 14 which produces a sync pulse signal which is fed to a horizontal sync pulse processor or processing circuit 15H, in which it is converted to a horizontal sync pulse P_H having a predetermined pulse width and predetermined phase and then is fed to a horizontal output circuit 16H. An output of the horizontal output circuit 16H comprises a deflection signal which is fed to a horizontal deflection coil 17H which is arranged conventionally on the colour cathode ray tube 13. The sync pulse signal from the sync separator 14 is fed also to an integrator 18 which produces a vertical sync pulse signal which is fed to a vertical pulse processor or processing circuit 15V in which it is converted to a vertical sync pulse signal P_V that has a predetermined pulse width and phase. The vertical sync pulse signal P_V is fed to a vertical output circuit 16V that produces a vertical deflection signal which is fed to a vertical deflection coil 17V arranged conventionally on the colour cathode ray tube 13.

In modern television receivers, specifically in modern digital signal processing television receivers, it is known to utilise an internal microcomputer or similar unit for selecting the television channel and for controlling the overall operation of the television set. Thus, in the present example, a microcomputer 19 is provided to control the tuner 1 to select a desired channel and another microcomputer 20 is provided for control of the overall television receiver. Inputs for the desired television channel and other functions and operating modes of the television receiver are provided to the microcomputer 19 by a key panel or keyboard 24, which may comprise a remote control unit or be a bank of switches on the front of the receiver. Typically, the keyboard 24 is provided with a plurality of keys or buttons by means of which the user can select a channel for viewing and can adjust the contrast, brightness, hue, colour saturation degree and the like of the picture being displayed. A non-volatile memory 21 is provided in association with the microcomputer 19, so that the various values of contrast, brightness, hue, colour saturation and the like that have been selected using the keyboard 24 are retained, even after the power switch of the television receiver is turned off, thereby precluding the necessity to reset all of these various parameters each time the television receiver is operated anew.

The values stored in the non-volatile memory 21, which of course is rewritable because the various values may be altered by use of the keyboard 24, are better thought of as offset values that represent differences from respective standard values for these various picture parameters. The standard values for the parameters, such as contrast, brightness, hue, colour saturation degree, and the like, are stored in a separate non-volatile memory 23. Also stored in the memory 23 are other data, such as data relating to white balance, horizontal deflection, vertical deflection, and so on, which need not be adjusted by the user but must, of course, be adjusted by the manufacturer at the time the set is fabricated and also, possibly, by a service technician if the receiver requires servicing. The data that is to be stored in the memory 23 is adjusted by means of an adjusting commander 26, which may be con-

nected temporarily at a terminal 25 to the microcomputer 20 when manufacture and assembly of the set has been completed.

Thus, when the main power switch of the television receiver of Figure 1 is turned on, the microcomputer 19 operates to read from the memory 21 the channel selection data, which had been selected prior to the time that the power switch of the receiver was turned off. This data then is supplied to the tuner 1 to reselect the channel previously selected before the receiver was turned off. Additionally, the microcomputer 19 reads the data of the various offset values relating to brightness and the like from the non-volatile memory 21 and supplies such data through an interface unit 29 to the microcomputer 20. The microcomputer 20 reads also the data relative to the brightness, white balance, and horizontal and vertical deflection from the memory 23, which data then is supplied through a bus 22 and an interface unit 27 to an amplifier control circuit 11. The amplifiers 11R, 11G, and 11B then are controlled by the amplifier control circuit 11 so that the three primary-colour signals red (R), green (G), and blue (B) are adjusted appropriately to establish the brightness and white balance, as determined by the standard values retained in the memory 23. Furthermore, the microcomputer 20 reads from the memory 23 the horizontal and vertical deflection data and supplies such data through a further interface unit 28 to the sync pulse processors 15H and 15V, respectively, which act to adjust the horizontal and vertical deflections to the standard values as retained in the memory 23.

Accordingly, it will be seen that the microcomputer 20 reads the data representing standard values of contrast, hue, colour saturation degree, horizontal and vertical deflection and the like from the memory 23. Then, the data representing the offset values and the data representing the standard values are added to each other and the summed data supplied through the interface unit 27 to the signal processors 5Y and 5C, in which the signals Y_D and C_D, respectively, are adjusted such that the predetermined contrast, hue, colour saturation degree, and the like are obtained. The colour cathode ray tube 13 then displays the television picture of the channel that had been selected when the power switch of the receiver was turned off, and such display is in the same state as previously selected prior to the termination of viewing. The data that is set into the interface units 27 and 28 is latched in registers contained internally therein (not shown in Figure 1) and such data is latched therein until new data is supplied to the respective interface unit.

The keyboard or key panel 24 may include numerous buttons or keys and, when the user operates such keys, the microcomputer 19 reads from the memory 21 the data relating to the selected channel that previously has been set in the memory 21 in accordance with the operated key. Typically, ten keys are provided for channel selection. This data then is fed to the tuner 1 so that it is placed in the channel selection state as designated by the appropriate keys of the key panel 24. At that same time, the data corresponding to the selected channel is written in the memory 21, in anticipation of the time when the power switch will be turned off, so that, when the receiver is turned back on, this channel will be selected.

As a further example, each time that the hue key on the key panel 24 is depressed, the data relating to the offset value of the hue data stored in the memory 21 is updated, and this updated, offset data then is supplied through the interface unit 27 to the appropriate signal processor, which in this case is the chrominance signal processor 5C, which then adjusts the hue of the displayed picture accordingly.

Typically, in colour television receivers of this kind, a display circuit is provided, and in the example of Figure 1 a display circuit 30 is used to display the selected channel on the screen of the colour cathode ray tube 13 upon channel selection. Such display circuits frequently also are used to display the sound or audio volume level each time such volume is adjusted. Channel data and sound volume data for use by the display circuit 30 are provided by the microcomputer 19 through the microcomputer 20. Thus, the display circuit 30 produces red (R_I), green (G_I), and blue (B_I) primary colour signals that then are supplied to the adders 10R, 10G, 10B, respectively, so that the selected channel, or the selected sound volume, or the like, are displayed on the screen of the colour cathode ray tube 13, being superimposed on the television picture being presented for viewing.

Concerning the general techniques involved in manufacturing television receivers of the type shown typically in Figure 1, the portions of the circuit diagram shown in Figure 1 that are enclosed by single-dot chain lines typically are each formed on one integrated circuit chip. These chips then are used to fabricate commercial television receivers. One source for these chips is the International Telephone and Telegraph Corporation (ITT) and, in that regard, attention is directed to the brochure "DIGIT 2000 VLSI Digital TV System" published by ITT.

In the receiver of Figure 1, the data stored in memory 23 is read out therefrom by the microcomputer 20 each time that the power switch of the television receiver is turned on. Then, in accordance with that data, the respective signal processors 5Y and 5C, the pulse processors 15H and 15V and so on are preset initially or, stated another way, are initialised. This situation poses no problem because, once the initially preset data is contained in the memory 23, it can be read out appropriately each time that the power switch of the receiver is turned on. Nevertheless, there is a serious problem when the power switch of the television receiver is turned on in the adjusting mode when there is no initially preset data in the memory 23. This situation can occur at the time that the standard value data is to

be written into the memory 23 by the adjusting commander 26, that is, at the time that manufacture of the set finally has been completed. In other words, at the time when the power switch of the receiver is first turned on in the adjusting mode there is nothing stored in the memory 23 or, if anything is stored there, it is only random data, so that the values of the respective circuit parameters may well be, and quite frequently are, set at abnormal, non-functional values. This then raises the serious question that an undue influence can be exerted upon the respective circuit portions and seriously damage such circuits. For example, if the horizontal and vertical amplitudes are caused to be increased by such abnormal data, or if the horizontal and vertical oscillation frequencies are drastically decreased by such random or abnormal data, there is a very real chance that the horizontal output circuit and vertical output circuit could be destroyed.

Embodiments of the present invention that will now be described provide systems for preventing or minimising any possibility that the various circuit elements or circuit sections of the receiver will be damaged by such abnormal pre-initialisation values that might be contained within the various digital memories and registers in the system.

Figure 2 shows an embodiment in which a read only memory (ROM) 20A and a random access memory (RAM) 20B are provided as part of the microcomputer 20. Moreover, in this embodiment, a part of the read only memory 20A is provided as a storage region 31 in which average initial setting data, that corresponds to each of the various data points that ultimately are to be stored in the memory 23, previously has been written and retained. The data stored in the region 31 of the ROM 20A cannot be rewritten and is selected to be common to each set or receiver of a specific kind, that is to all models within a specific model line.

In this embodiment, the circuit of Figure 2 is operated in accordance with a selected method represented by a routine shown in the flow chart of Figure 3. Referring to Figure 3, after the power switch of the television receiver is turned on, as represented in a step S100, it is determined in a step S110 whether the adjusting mode is present or not. For example, when the adjusting commander 26 is connected at the connector 25 of the microcomputer 20, it is determined or judged that the television receiver is in the adjusting mode. If the receiver is judged to be in the adjusting mode, the method proceeds to a step S120, in which an adjusting flag is raised to indicate that the adjusting mode is present, and then to a step S130, in which the average, initial, standard data for each circuit portion, which has been stored in the region 31 of the ROM 20A, is read out therefrom and set in each of the respective circuit portions of the receiver. When such data has been read out completely from the section 31 of the ROM 20A, the method moves to a step S140 at which it is determined or judged whether a remote control signal is being transmitted from the adjusting commander 26. If such remote control signal is being transmitted from the adjusting commander 26, then each circuit portion is adjusted appropriately and the data for each of the circuit portions is written into the memory 23. This writing of the data into the memory 23 occurs at a step S150. Once the adjusted data has been written into the memory 23 the method proceeds to a step S160 at which it is judged whether the television receiver remains in the adjusting mode. Releasing of the adjusting mode may be accomplished by operating an adjusting end key, for example, an EXIT key typically is provided on the adjusting commander 26, whereby the adjusting mode flag is turned off and the adjusting mode is released. If the adjusting mode is determined to be released, the method moves to a step S170 at which the data that was written in during the adjusting mode is read out from the memory 23 and such data then is set in each circuit portion appropriately. On the other hand, if the adjusting mode is judged not to be released, then the step S160 indicates that the step S140 and the subsequent steps are to be repeated. The steps schematically depicted in Figure 3 are given by way of example only and, of course, other embodiments of this method could be provided following the teaching of the foregoing disclosure to accommodate forms of digital television receivers that differ from the example of Figure 1.

According to the embodiment described above, when the power switch of the television receiver is turned on in the adjusting mode, the average initial values that are set into the respective parts of each of the circuit portions are those corresponding to the data that previously had been stored in the region 31 of the ROM 20A. Accordingly, even if the initial set data is not already written in the memory 23, no circuit section ever can be set to an abnormal value and there is little or no possibility that any circuit section can be damaged or destroyed.

Another embodiment of the present invention is represented by the block diagram of Figure 4, which shows only portions of the television receiver. In the embodiment of Figure 4, a non-volatile memory 32, which contains average predetermined set data corresponding to the data written into the memory 23, is arranged outside of the microcomputer 20 and is connected to the data bus 22. Thus, in this embodiment, when the power switch of the television receiver is turned on in the adjusting mode, the average initial set data of the respective circuit sections is derived from this external non-volatile memory 32, instead of from the fixed portion 31 of the internal ROM 20A, and then is set into each circuit section appropriately. It will be clear that in accordance with the embodiment of Figure 4, the exact same operation and effects are possible as those described above in relation to Figure 2 following the method depicted in Figure 3.

Claims

1. Apparatus for use with a television receiver that processes television signal in digital form under control of digital data stored in at least one register of the receiver, the apparatus comprising:

memory means (20A; 32) operably connected to the television receiver for storing predetermined receiver initialisation or initial control data and,

control means connected to the television receiver for controlling the memory means (20A; 32) and the at least one register to set said predetermined receiver initialisation or initial control data stored in the memory means (20A; 32) into the at least one register at a first time the television receiver is operated.

2. Apparatus according to claim 1, in which the memory means comprises a read only memory (20A) and a portion (31) of the read only memory (20A) containing said predetermined receiver initialisation or initial control data is non-volatile and non-rewritable.

3. Apparatus according to claim 1 or claim 2, comprising means for operating said control means at a time when a power switch of the television receiver is turned on for a first time.

4. Apparatus according to claim 1 or claim 2, comprising manually operable means (24) for producing adjusting data for use in controlling the television receiver, and second memory means (21) connected to store the adjusting data from the manually operable means (24) for producing adjusted data whereby the processing of the television signal is also under control of the adjusted data.

5. Apparatus according to claim 4, in which the second memory means (21) is a non-volatile and re-writable memory.

6. Apparatus according to claim 5, comprising means for writing the adjusted data set in the second memory means (21) into the at least one register each subsequent time a power switch of the television receiver is turned on following a first time.

7. Apparatus according to claim 4, claim 5 or claim 6, in which the second memory means comprises first and second non-volatile memories (23, 21), the first memory (23) being arranged to store a predetermined standard value of data and the second memory (21) being arranged to store an offset value of data, said adjusted data comprising a sum of said standard data and said offset data.

8. A method for use with a television receiver that processes a television signal in digital form under control of digital data stored in a register of the receiver and including an adjusting controller (26), the method comprising the steps of:

providing a non-volatile, non-rewritable memory means (20A; 32) containing initial set data;

determining (S110) whether the receiver is in an adjusting mode: and

reading out (S130) the initial set data from the memory means (20A; 32) into the register of the receiver when the receiver is determined to be in the adjusting mode for controlling the receiver in accordance with the initial set data at a first time power is applied thereto.

9. A method according to claim 8, including the step of providing the initial set data by statistically determining average values for such data.

10. A method according to claim 8 or claim 9, including the step (S120) of providing a data flag indicating the presence of the adjusting mode upon affirmative determination thereof.

11. A method according to claim 8, claim 9 or claim 10, for a receiver which includes a non-volatile rewritable memory (23), the method including the steps of:

using (S140) the adjusting controller (26) to enter adjusted data into the rewritable memory (23); and

adjusting the initial set data in the register in accordance with the adjusted data in the rewritable memory (23).

Patentansprüche

1. Einrichtung zur Benutzung mit einem Fernsehempfänger, der ein Fernsehsignal in digitaler Form unter Steuerung von digitalen Daten verarbeitet, die in zumindest einem Register gespeichert sind, welche Einrichtung umfaßt:

ein Speichermittel (20A; 32), das betreibbar mit dem Fernsehempfänger zum Speichern vorbestimmter Empfänger-Initialisierungs- oder Anfangssteuerdaten verbunden ist, und

ein Steuermittel, das mit dem Fernsehempfänger zum Steuern des Speichermittels (20A; 32) und des zumindest einen Registers verbunden ist, um die vorbestimmten Empfänger-Initialisierungs- oder Anfangssteuerdaten, die in dem Speichermittel (20A; 32) gespeichert sind, in dem zumindest einen Register dann zu setzen, wenn der Fernsehempfänger ein erstes Mal betrieben wird.

2. Einrichtung nach Anspruch 1, bei der das Speichermittel aus einem Nur-Lesespeicher (20A) besteht und ein Teil (31) des Nur-Lesespeichers (20A), der die vorbestimmten Empfänger-Initialisierungs- oder Anfangssteuerdaten beinhaltet, nichtflüchtig und nichtüberschreibbar ist.

3. Einrichtung nach Anspruch 1 oder 2, die Mittel umfaßt zum Betreiben des Steuermittels zu einer Zeit, wenn ein Netzschalter des Fernsehempfängers für ein erstes Mal eingeschaltet ist.

4. Einrichtung nach Anspruch 1 oder 2, die ein von Hand betätigbares Mittel (24) zum Erzeugen von Einstelldaten zur Benutzung beim Steuern des Fernsehempfängers und ein zweites Speichermittel (21) umfaßt, das angeschlossen ist, um die Einstelldaten aus dem von Hand betätigbaren Mittel (24) zum Erzeugen eingestellter Daten zu speichern, wodurch die Verarbeitung des Fernsehsignals auch unter Kontrolle der eingestellten Daten steht.

5. Einrichtung nach Anspruch 4, bei der das

zweite Speichermittel (21) ein nichtflüchtiger und überschreibbarer Speicher ist.

6. Einrichtung nach Anspruch 5, die Mittel umfaßt zum Einschreiben der eingestellten Daten, welche in dem zweiten Speichermittel (21) gesetzt sind, in das zumindest eine Register bei jedem folgenden Mal, wenn ein Netzschalter des Fernsehempfängers nach einem ersten Mal eingeschaltet wird.

7. Einrichtung nach Anspruch 4, 5 oder 6, bei der das zweite Speichermittel erste und zweite nichtflüchtige Speicher (23, 21) umfa8t, wobei der erste Speicher (23) vorgesehen ist, um einen vorbestimmten Standardwert von Daten zu speichern, und wobei der zweite Speicher (21) vorgesehen ist, um einen Abweichungswert von Daten zu speichern, wobei die eingestellten Daten aus einer Summe der Standarddaten und der Abweichungsdaten bestehen.

8. Verfahren zur Benutzung mit einem Fernsehempfänger, der ein Fernsehsignal in digitaler Form unter Steuerung von digitalen Daten verarbeitet, die in einem Register des Empfängers gespeichert sind, und eine Einstellsteuereinrichtung enthält, welches Verfahren Schritte umfaßt zum:

Bereitstellen eines nichtflüchtigen, nichtüberschreibbaren Speichermittels (20A; 32), das Anfangseinstelldaten beinhaltet,

Feststellen (S110), ob sich der Empfänger in einem Einstellbetriebszustand befindet, und

Auslesen (S130) der anfänglich gesetzten Daten aus dem Speichermittel (20A; 32) in das Register das Empfängers, wenn festgestellt ist, daß sich der Empfänger in dem Einstellbetriebszustand befindet, zum Steuern des Empfängers in Übereinstimmung mit den anfänglich gesetzten Daten dann, wenn diesem ein erstes Mal Strom zugeführt wird.

9. Verfahren nach Anspuch 8, das einen Schritt zum Bereitstellen der anfänglich gesetzten Daten durch statistisches Bestimmen von Mittelwertdaten für derartige Daten enthält.

10. Verfahren nach Anspruch 8 oder 9, das einen Schritt (S120) zum Erzeugen eines Datenkennzeichens enthält, welches das Vorliegen des Einstellbetriebszustands auf eine bejahende Entscheidung darüber hin anzeigt.

11. Verfahren nach Anspruch 8, 9 oder 10 für einen Empfänger, der einen nichtflüchtigen überschreibbaren Speicher (23) enthält, welches Verfahren Schritte aufweist zum:

Benutzen (S140) der Einstellsteuereinrichtung (26), um eingestellte Daten in den überschreibbaren Speicher (23) einzugeben, und

Einstellen der anfänglich gesetzten Daten in dem Register in Ubereinstimmung mit den eingestellten Daten in dem überschreibbaren Speicher (23).

Revendications

1. Dispositif destiné à servir avec un récepteur de télévision gui traite un signal de télévision sous forme numérique sous la commande de données numériques mémorisées dans au moins un registre du récepteur, le dispositif comprenant:

un moyen à mémoire (20A; 32) connecté activement au récepteur de télévision pour mémoriser des données d'initialisation ou de commande initiale de récepteur prédéterminées; et

un moyen de commande connecté au récepteur de télévision pour commander le moyen à mémoire (20A; 32) et le registre au moins afin de mettre les données d'initialisation ou de commande initiale de récepteur prédéterminées mémorisées dans le moyen à mémoire (20A; 32) dans le registre au moins, une première fois où le récepteur de télévision est mis en fonctionnement.

2. Dispositif selon la revendication 1, dans lequel le moyen à mémoire comprend une mémoire morte (20A), et une partie (31) de la mémoire morte (20A) contenant les données d'initialisation ou de commande initiale de récepteur prédéterminées est rémanente et non réinscriptible.

3. Dispositif selon l'une quelconque des revendications 1 et 2, comprenant un moyen pour faire fonctionner le moyen de commande à un temps où un interrupteur d'alimentation du récepteur de télévision est fermé une première fois.

4. Dispositif selon l'une quelconque des revendications 1 et 2, comprenant un moyen (24) pouvant être mis en fonctionnement manuellement pour produire des données de réglage destinées à servir pour la commande du récepteur de télévision, et un deuxième moyen à mémoire (21) connecté pour mémoriser les données de réglage provenant du moyen (24) pouvant être mis en fonctionnement manuellement pour produire des données réglées, le traitement du signal de télévision étant aussi sous la commande des données réglées par celui-ci.

5. Dispositif selon la revendication 4, dans lequel le deuxième moyen à mémoire (21) est une mémoire rémanente et réinscriptible.

6. Dispositif selon la revendication 5, comprenant un moyen pour écrire les données réglées mises dans le deuxième moyen à mémoire (21) dans le registre au moins à chaque fois suivante où un interrupteur d'alimentation du récepteur de télévision est fermé après une première fois.

7. Dispositif selon l'une quelconque des revendications 4 à 6, dans lequel le deuxième moyen à mémoire comprend des première et deuxième mémoires rémanentes (23, 21), la première mémoire (23) étant agencée pour mémoriser une valeur standard prédéterminée de données et la deuxième mémoire (21) étant agencée pour mémoriser une valeur de décalage de données, les données réglées constituant la somme des données standard et des données de décalage.

8. Procédé à mettre en oeuvre avec un récepteur de télévision qui traite un signal de télévision sous forme numérique sous la commande de données numériques mémorisées dans un

registre du récepteur et incluant un contrôleur de réglage (26), le procédé comprenant les opérations consistant à:

prévoir un moyen à mémoire rémanente non réinscriptible (20A; 32) contenant des données de réglage initial;

déterminer (S110) si le récepteur est dans un mode de réglage; et à

lire (S130) les données de réglage initial dans le moyen à mémoire (20A; 32) par le registre du récepteur quand le récepteur est déterminé comme étant dans le mode de réglage pour commander le récepteur selon les données de réglage initial une première fois où une alimentation lui est appliquée.

9. Procédé selon la revendication 8, incluant l'opération qui consiste à fournir les données de réglage initial en déterminant statistiquement des valeurs moyennes pour ces données.

10. Procédé selon l'une quelconque des revendications 8 et 9, incluant l'opération (S120) qui consiste à fournir un indicateur de données qui indique la présence du mode de réglage lors d'une détermination affirmative de celui-ci.

11. Procédé selon l'une quelconque des revendications 8 à 10, pour un récepteur qui comprend une mémoire rémanente réinscriptible (23), le procédé incluant les opérations qui consistent à:

utiliser (S140) le contrôleur de réglage (26) pour introduire des données réglées dans la mémoire réinscriptible (23); et à

régler les données de réglage initial dans le registre selon les données réglées se trouvant dans la mémoire réinscriptible (23).

FIG. 1

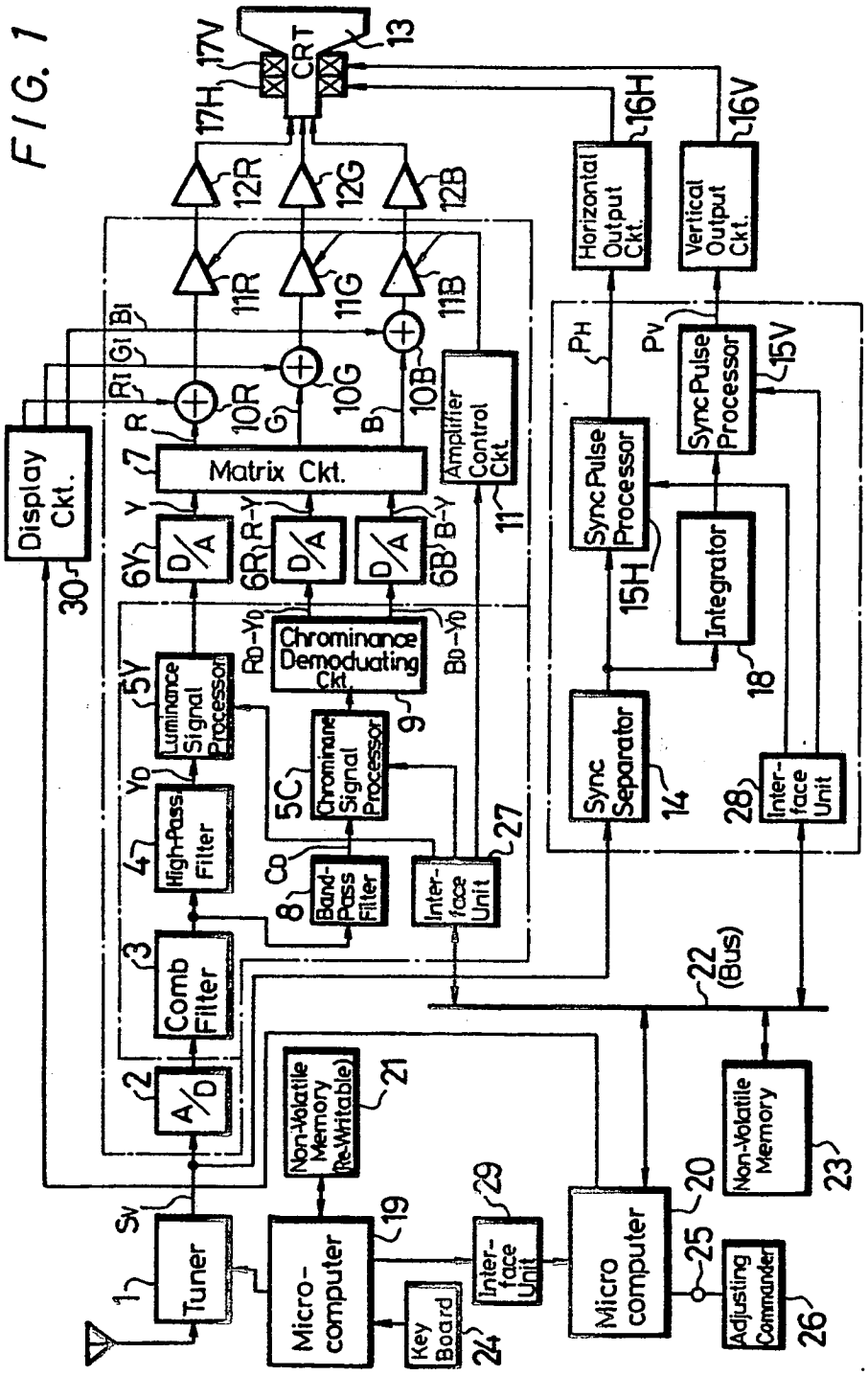
CRT
13
17V
17H
12R
12G
12B
11R
11G
11B
10R
10G
10B
Ri
Gi
Bi
R
G
B
Matrix Ckt.
7
Amplifier Control Ckt.
11
Display Ckt.
30
Y
R-Y
B-Y
6Y
6R
6B
D/A
Ro-Yo
Bo-Yo
Chrominance Demoduating Ckt.
9
5Y
Luminance Signal Processor
5C
Chrominance Signal Processor
Yo
High-Pass Filter
4
Co
Band-Pass Filter
8
Inter-face Unit
27
Comb Filter
3
A/D
2
Sv
Tuner
1
Non-Volatile Memory (Re-Writable)
21
Micro-computer
19
Key Board
24
Inter-face Unit
29
Micro computer
20
25
Adjusting Commander
26
Non-Volatile Memory
23
22 (Bus)
Horizontal Output Ckt.
16H
Vertical Output Ckt.
16V
PH
PV
Sync Pulse Processor
15V
Sync Pulse Processor
15H
Integrator
18
Sync Separator
14
Inter-face Unit
28

FIG. 2

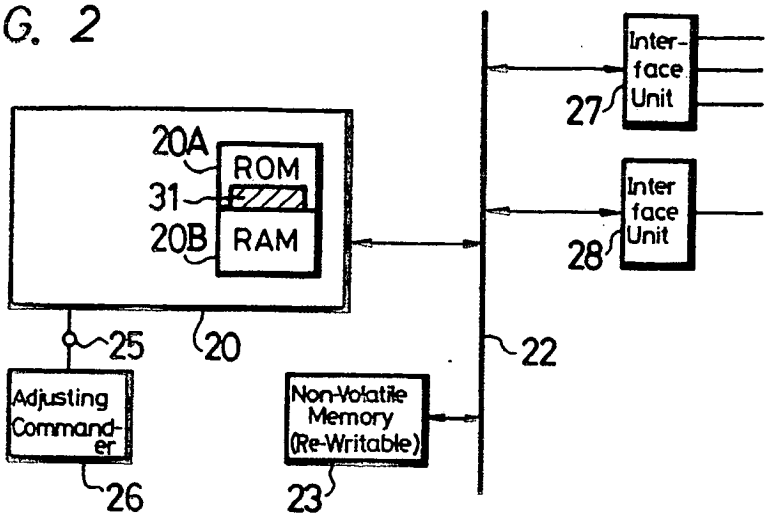
Inter-face Unit
27
Inter face Unit
28
20A
ROM
31
20B
RAM
25
20
22
Adjusting Commander
26
Non-Volatile Memory (Re-Writable)
23

FIG. 4

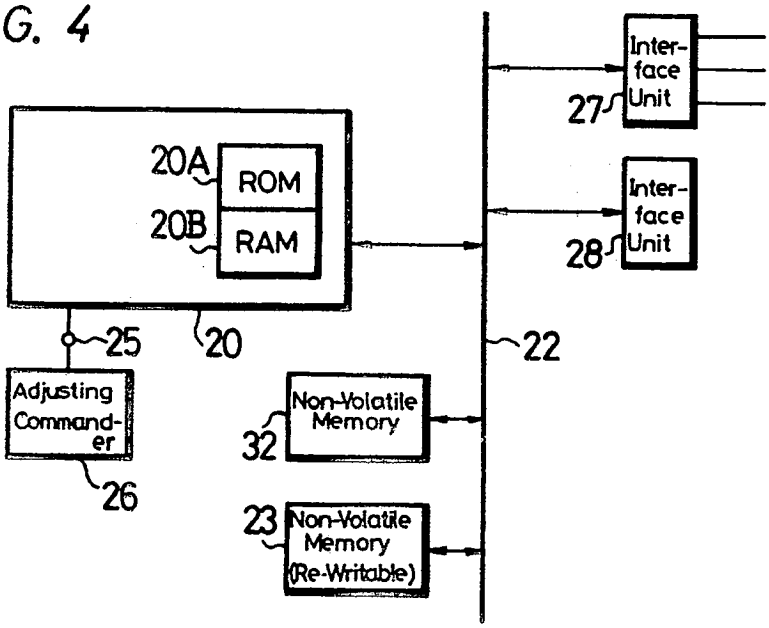
Inter-face Unit
27
Inter-face Unit
28
20A
ROM
20B
RAM
25
20
22
Adjusting Commander
26
Non-Volatile Memory
32
23
Non-Volatile Memory (Re-Writable)

FIG. 3

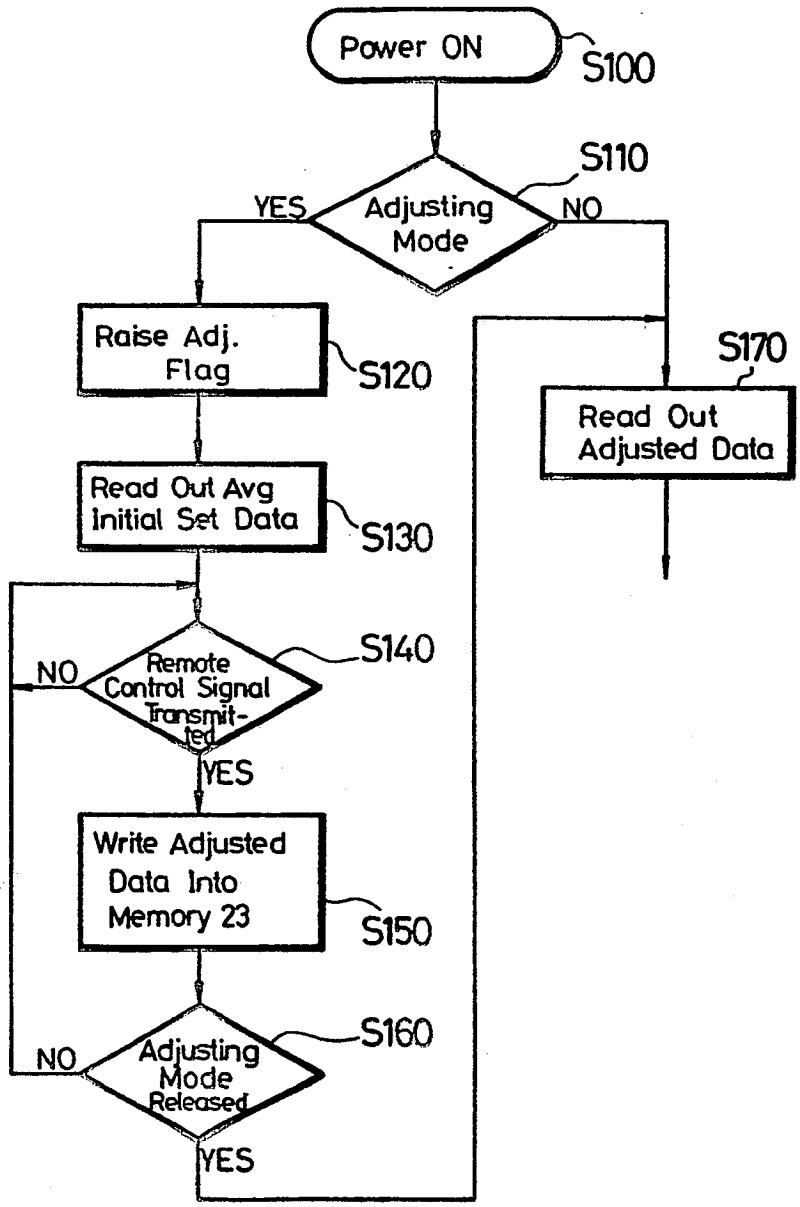
Power ON
S100
S110
Adjusting Mode
YES
NO
Raise Adj. Flag
S120
Read Out Avg Initial Set Data
S130
Remote Control Signal Transmit-ted
S140
NO
YES
Write Adjusted Data Into Memory 23
S150
Adjusting Mode Released
S160
NO
YES
S170
Read Out Adjusted Data

REGISTER ENTRY FOR EP0178844

European Application No EP85307222.1 filing date 09.10.1985

Priority claimed:
16.10.1984 in Japan - doc: 152170368

Designated States DE FR GB NL

Title TELEVISION RECEIVERS

Applicant/Proprietor
SONY CORPORATION, 7-35 Kitashinagawa 6-Chome Shinagawa-ku, Tokyo 141, Japan [ADP No. 50025071001]

Inventors
TAKAO ITABASHI, c/o Sony Corporation, Patents Division 6-7-35 Kitashinagawa, Shinagawa-ku Tokyo 141, Japan [ADP No. 54008628001]

JUNYA SAITO, c/o Sony Corporation, Patents Division 6-7-35 Kitashinagawa, Shinagawa-ku Tokyo 141, Japan [ADP No. 54008636001]

NORIHITO ICHIKAWA, c/o Sony Corporation, Patents Division 6-7-35 Kitashinagawa, Shinagawa-ku Tokyo 141, Japan [ADP No. 54008644001]

HISAFUMI YAMADA, c/o Sony Corporation, Patents Division 6-7-35 Kitashinagawa, Shinagawa-ku Tokyo 141, Japan [ADP No. 54008651001]

Classified to
H4F
H04N

Address for Service
D YOUNG & CO, 10 Staple Inn, LONDON, WC1V 7RD, United Kingdom [ADP No. 00000059001]

EPO Representative
IVAN JOHN COTTER, D. YOUNG & CO. 10 Staple Inn, London WC1V 7RD, United Kingdom [ADP No. 50211507001]

Publication No EP0178844 dated 23.04.1986
Publication in English

Examination requested 09.10.1985

Patent Granted with effect from 19.12.1990 (Section 25(1)) with title
TELEVISION RECEIVERS.

22.06.1990 D YOUNG & CO, 10 Staple Inn, LONDON, WC1V 7RD, United Kingdom [ADP No. 00000059001]
registered as address for service
Entry Type 8.11 Staff ID. SLP1 Auth ID. AA

07.10.1991 EPO: Opposition filed on 13.09.1991
Entry Type 25.1 Staff ID. RD06 Auth ID. EPT

14.10.1991 EPO: Opposition filed on 19.09.1991
Entry Type 25.1 Staff ID. RD06 Auth ID. EPT

14.06.1993 Notification of change of Address For Service address of
D YOUNG & CO, 10 Staple Inn, LONDON, WC1V 7RD, United Kingdom
[ADP No. 00000059001]
to
D YOUNG & CO, 21 New Fetter Lane, LONDON, EC4A 1DA, United Kingdom
[ADP No. 00000059006]
dated 19.05.1993. Written notification filed on EP0509403
Entry Type 7.3 Staff ID. SW Auth ID. EO

25.02.1994 EPO: Case amended on 30.03.1994
Entry Type 25.12 Staff ID. RD06 Auth ID. EPT

**** END OF REGISTER ENTRY ****

RENEWAL DETAILS

PUBLICATION NUMBER EP0178844

PROPRIETOR(S)

SONY CORPORATION, 7-35 Kitashinagawa 6-Chome Shinagawa-ku, Tokyo 141, Japan

DATE FILED	09.10.1985
DATE GRANTED	19.12.1990
DATE NEXT RENEWAL DUE	09.10.1994
DATE NOT IN FORCE	
DATE OF LAST RENEWAL	08.10.1993
YEAR OF LAST RENEWAL	09
STATUS	PATENT IN FORCE