US 20070238393A1

(19) United States

(12) Patent Application Publication (10) Pub. No.: US 2007/0238393 A1

Shin et al. (43) Pub. Date: Oct. 11, 2007

(54) METHODS AND APPARATUS FOR POLISHING AN EDGE OF A SUBSTRATE

(76) Inventors: **Ho Seon Shin**, Cupertino, CA (US); **Gary C. Ettinger**, Cupertino, CA (US); **Donald J.K. Olgado**, Palo Alto, CA (US); **Erik C. Wasinger**, Naperville, IL (US); **Sen-Hou Ko**, Sunnyvale, CA (US); **Charles I. Dodds**, San Jose, CA (US); **Yufei Chen**, San Jose, CA (US); **Wei-Yung Hsu**, Santa Clara, CA (US)

Correspondence Address:
DUGAN & DUGAN, PC
55 SOUTH BROADWAY
TARRYTOWN, NY 10591 (US)

(21) Appl. No.: **11/693,695**

(22) Filed: **Mar. 29, 2007**

Related U.S. Application Data

(60) Provisional application No. 60/787,438, filed on Mar. 30, 2006.

Publication Classification

(51) **Int. Cl.**
B24B 51/00 (2006.01)
B24B 49/00 (2006.01)
B24B 7/30 (2006.01)

(52) **U.S. Cl.** **451/5**; 451/8; 451/41

(57) **ABSTRACT**

Methods of and systems for polishing an edge of a substrate are provided. The invention includes rotating a substrate against a polishing film so as to remove material from the edge of the substrate; and detecting an amount of one of energy and torque exerted in rotating the substrate against the polishing film. The invention may further include determining an amount of material removed from the edge of the substrate based on the detected energy or torque exerted in rotating the substrate against the polishing film; ascertaining a difference between the determined amount of material removed and a preset polish level; and determining an amount of energy or torque to be exerted in rotating the substrate adapted to attain the preset polish level based on the difference between the determined amount of material removed and the preset polish level. Numerous other aspects are provided.

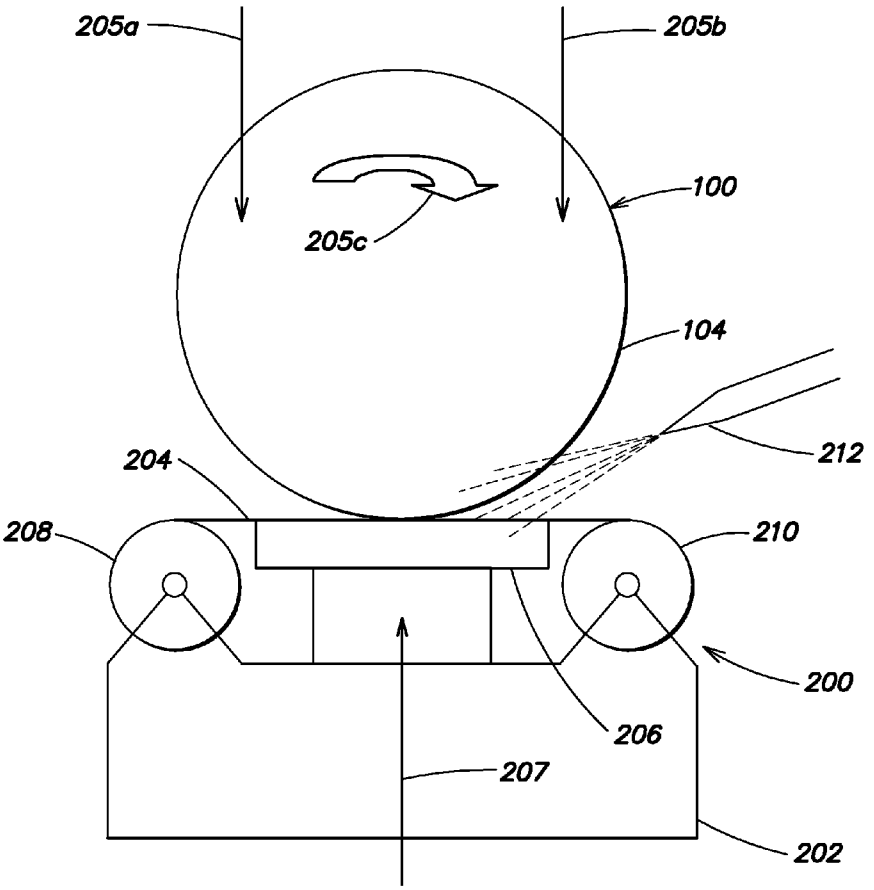

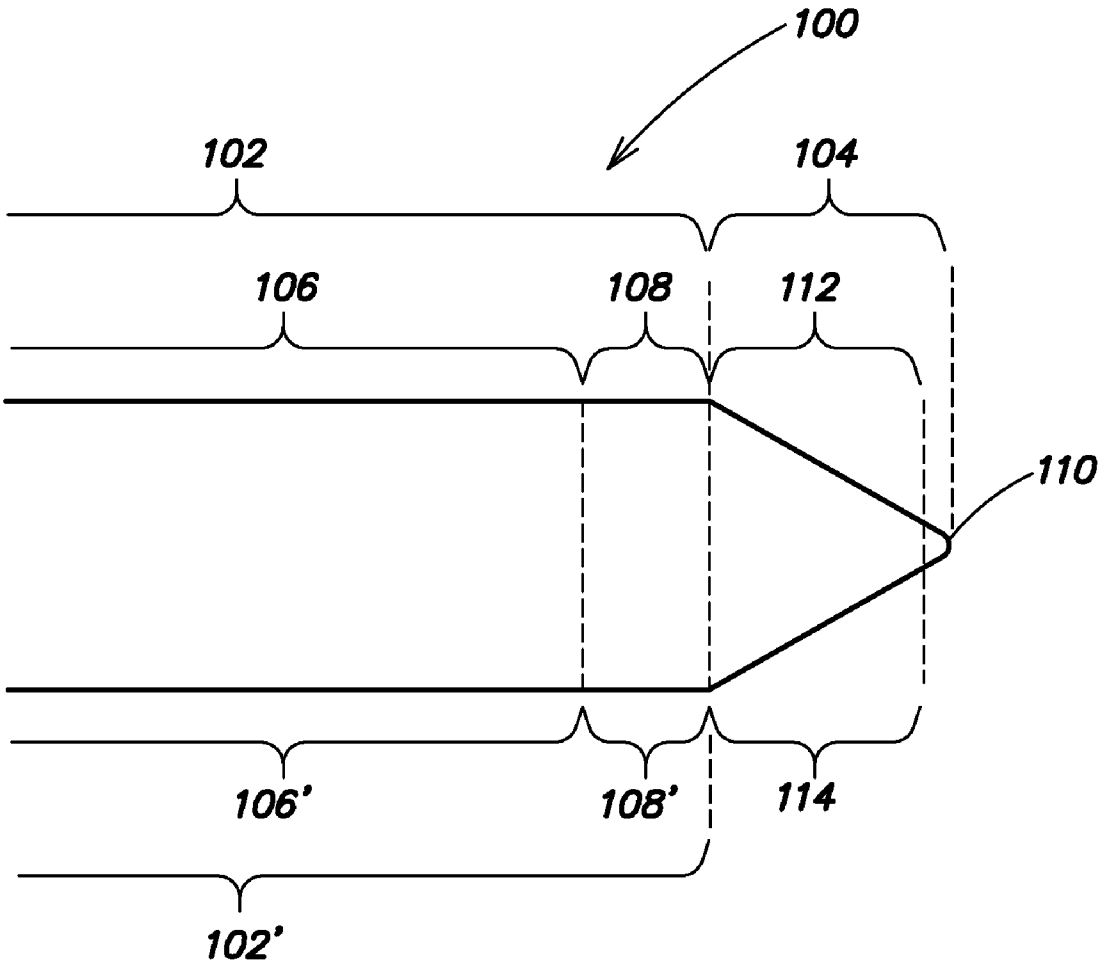

FIG. 1

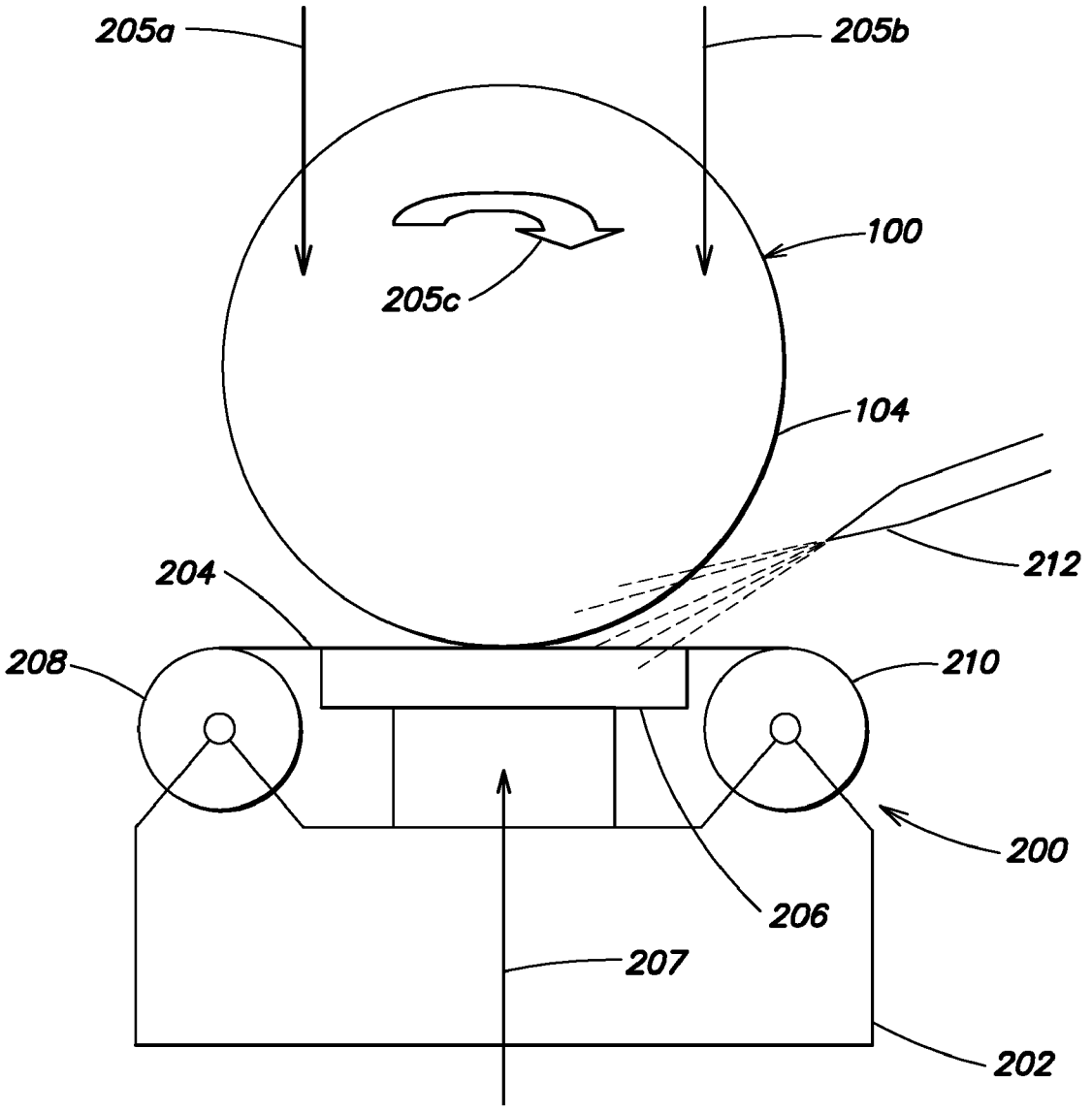

FIG. 2

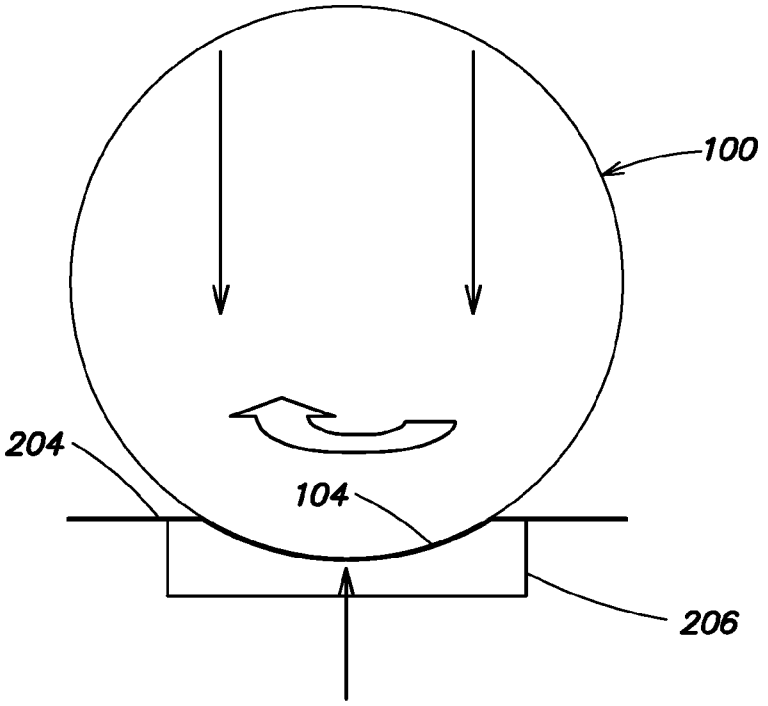

FIG. 3A

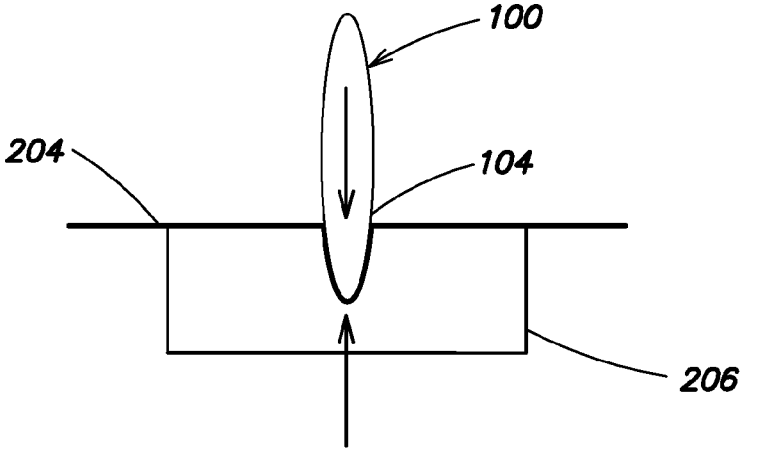

FIG. 3B

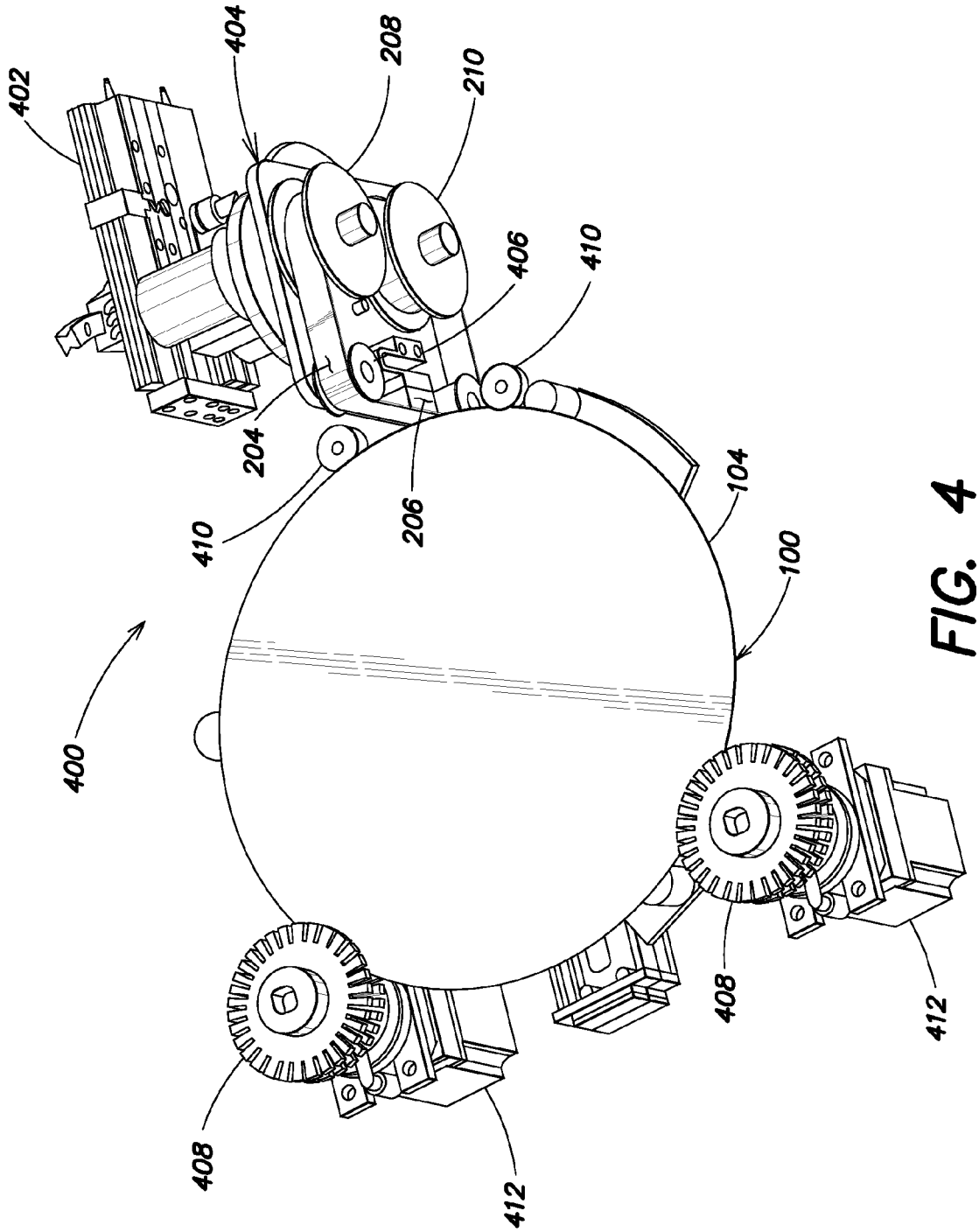

FIG. 4

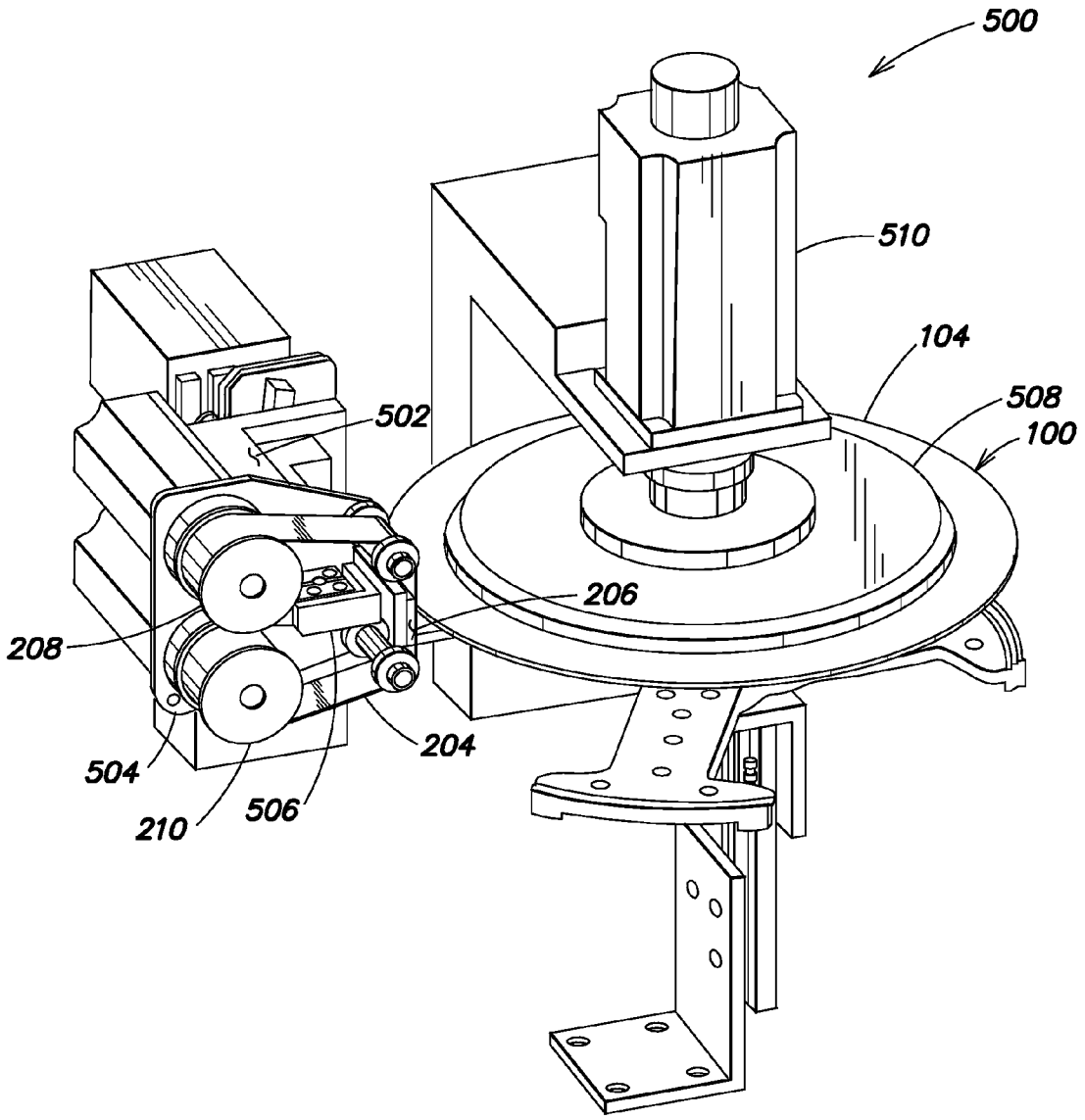

FIG. 5

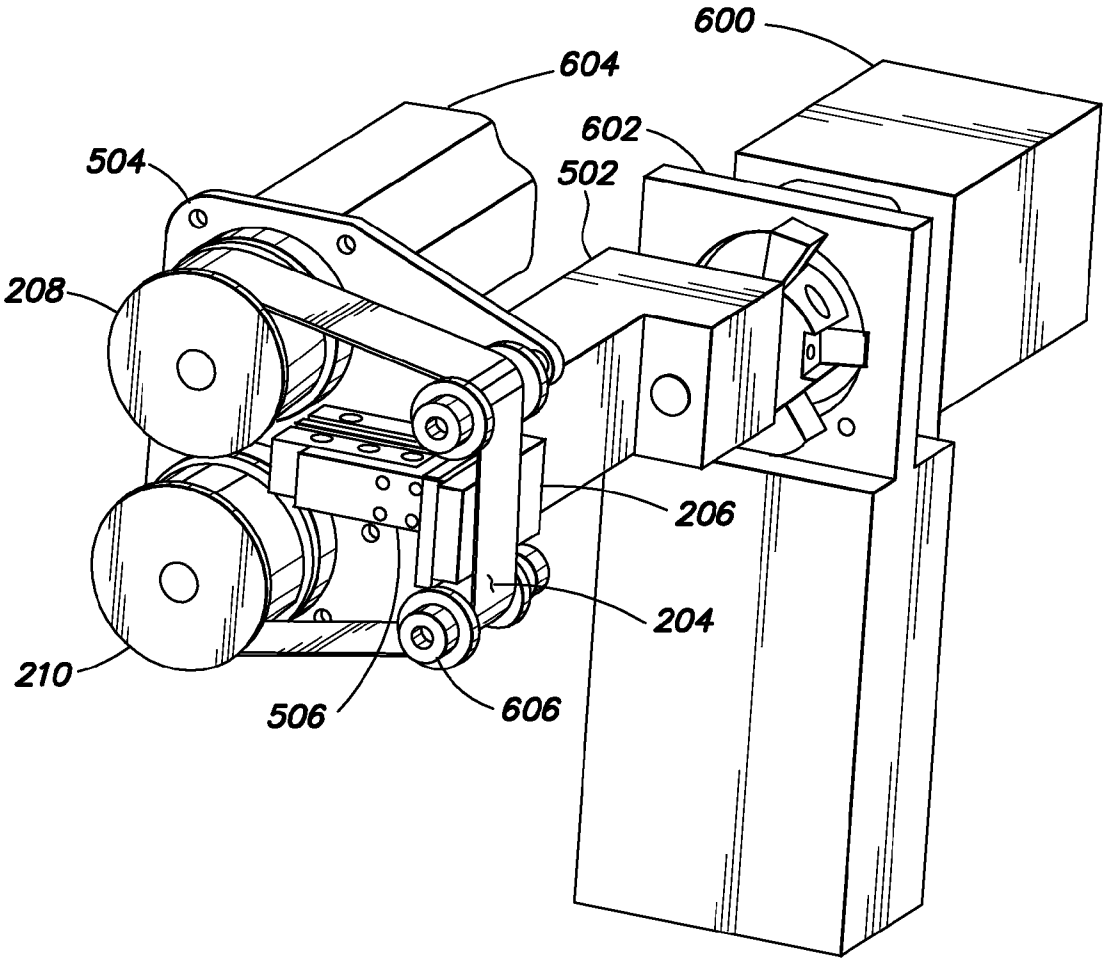

FIG. 6

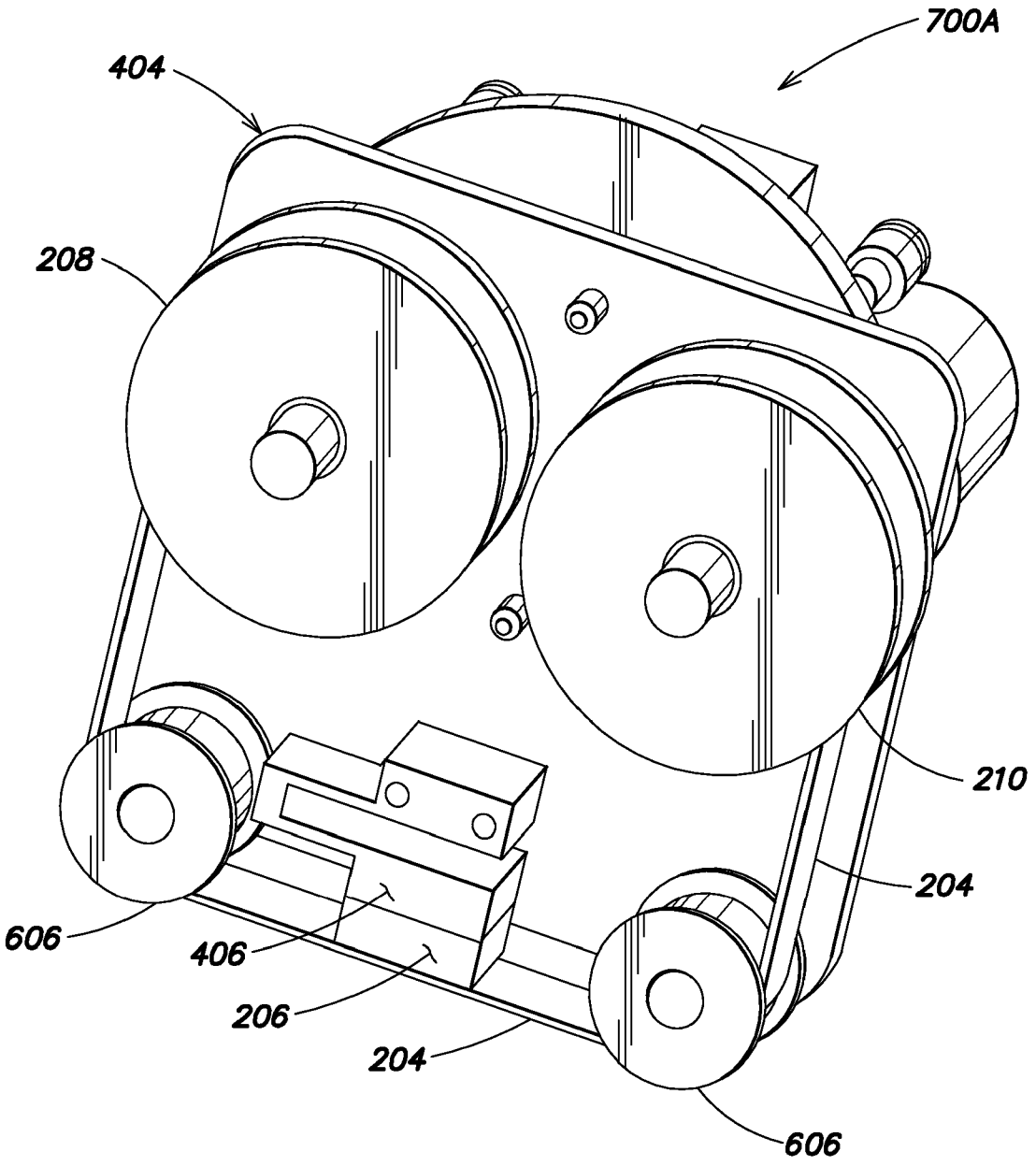

FIG. 7A

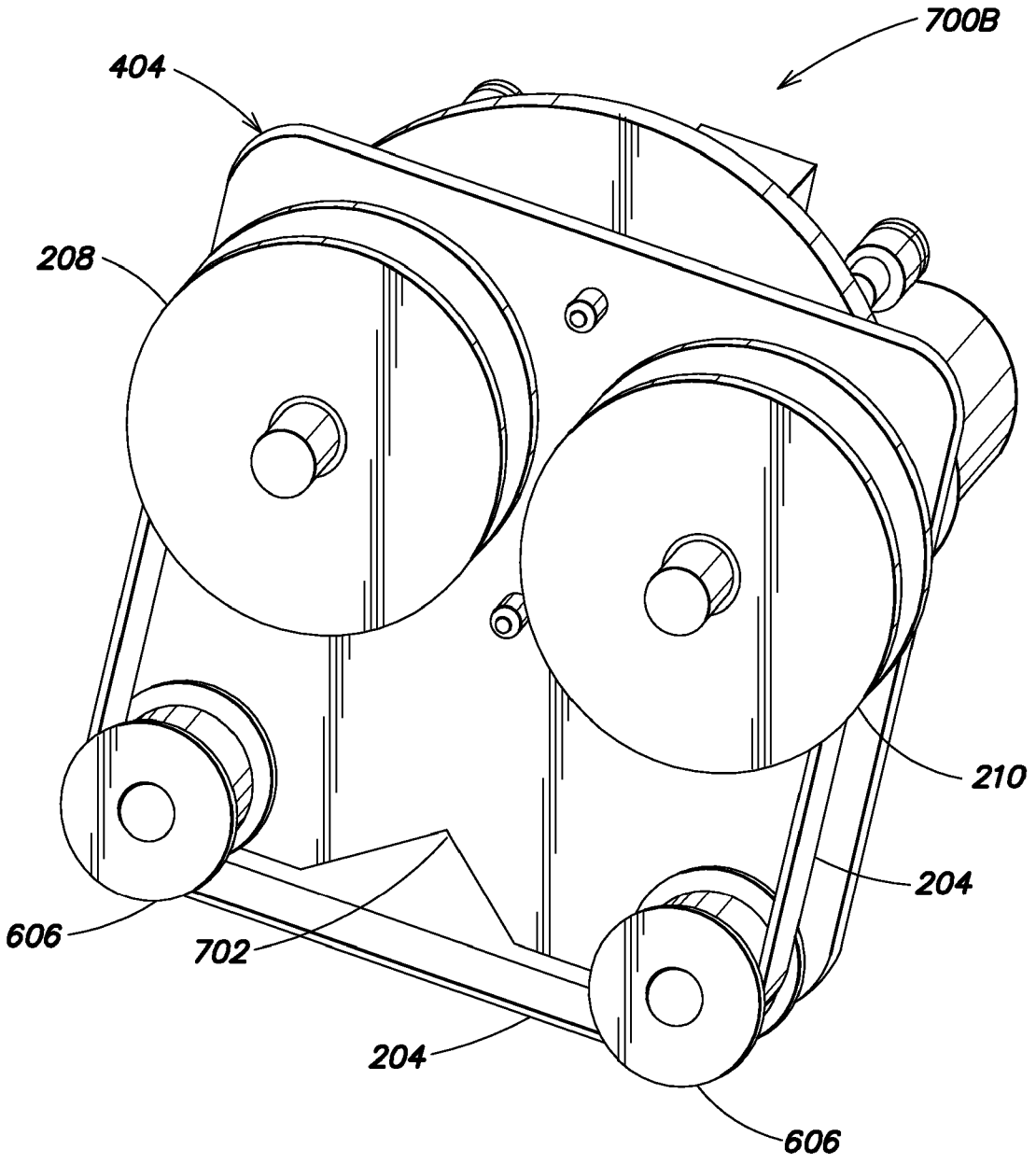

FIG. 7B

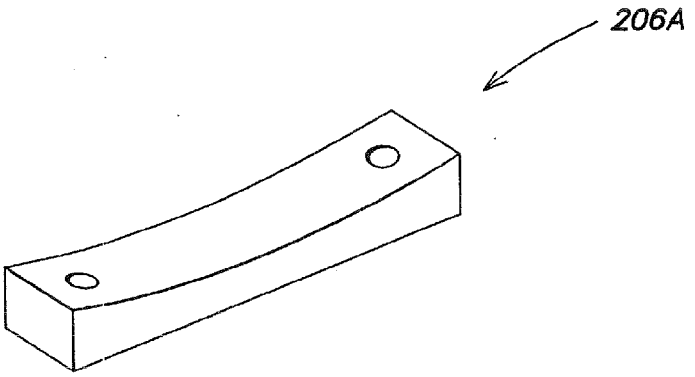

FIG. 8A

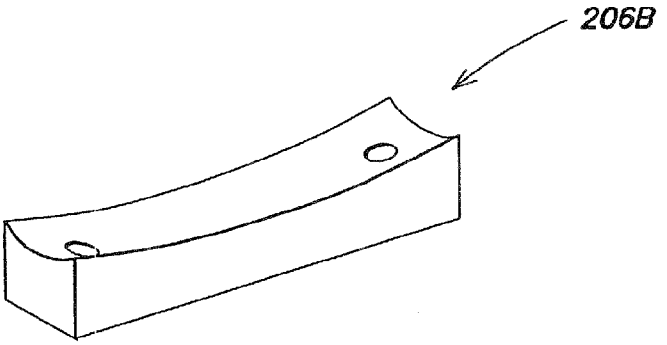

FIG. 8B

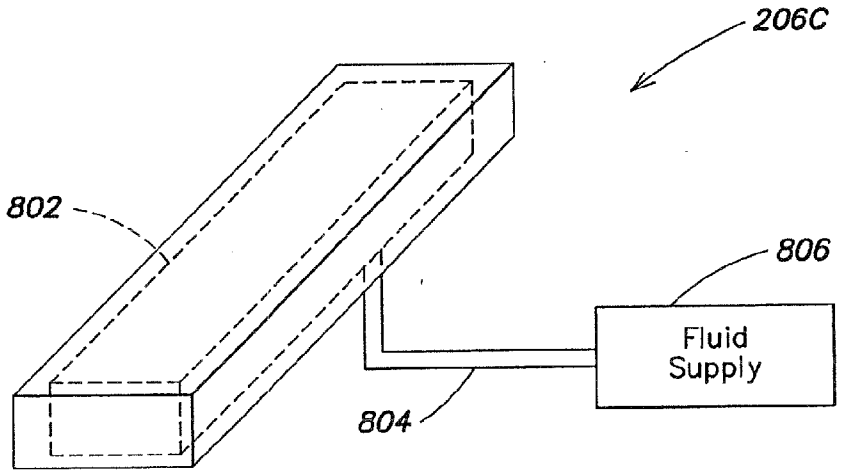

FIG. 8C

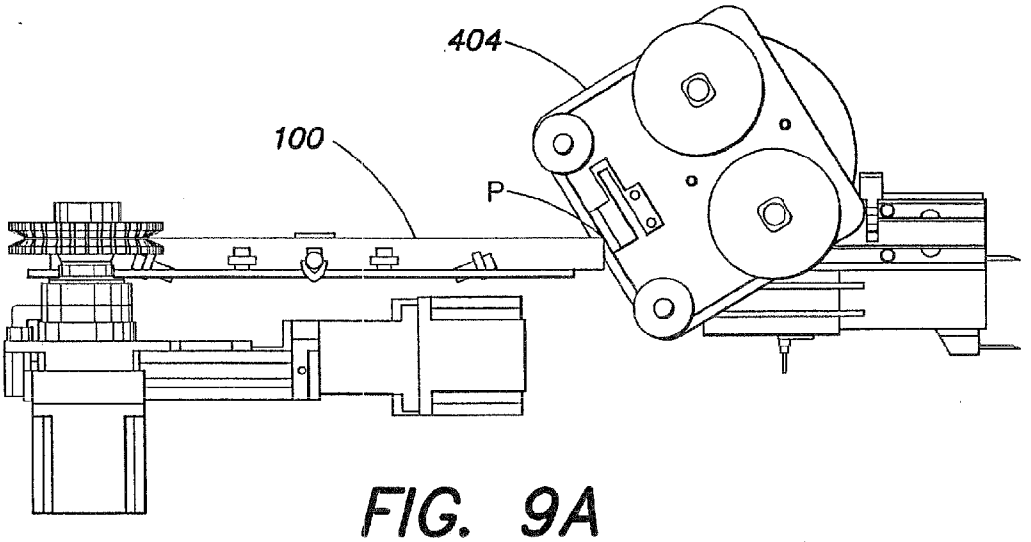

FIG. 9A

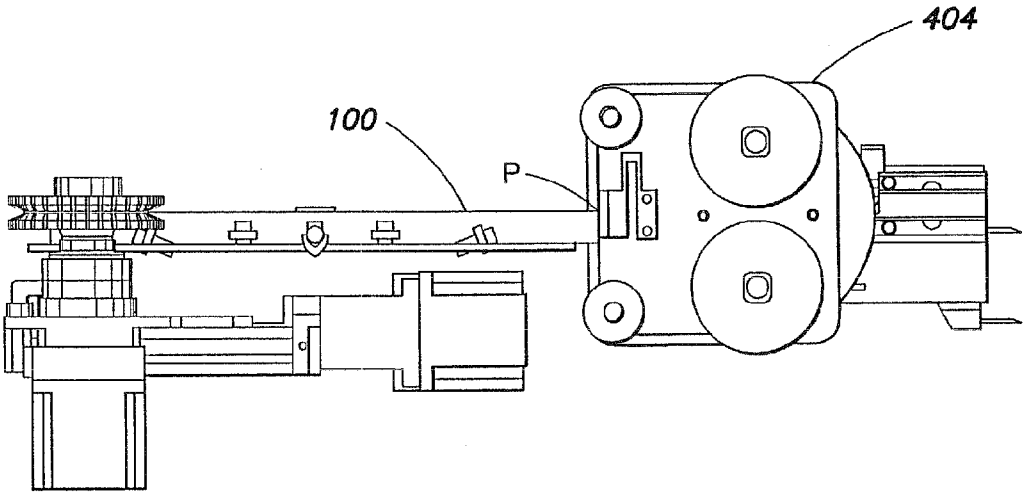

FIG. 9B

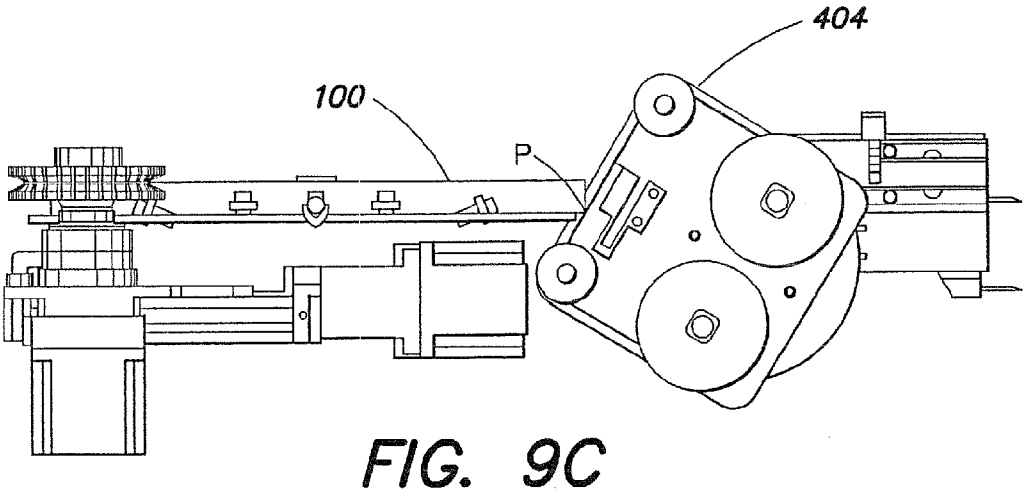

FIG. 9C

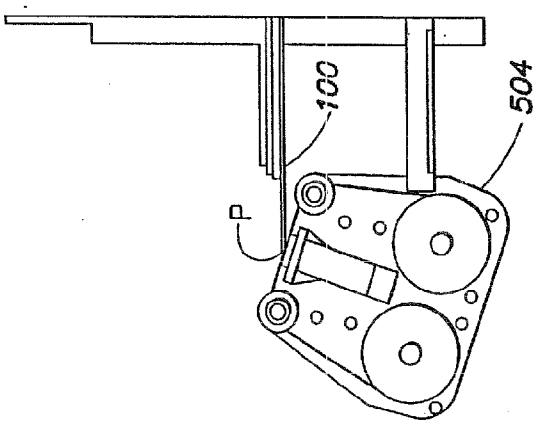

FIG. 10C

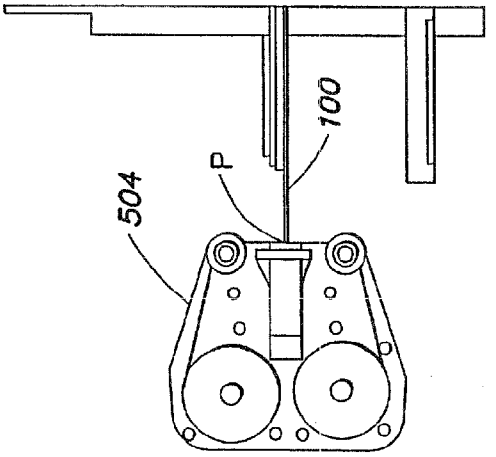

FIG. 10B

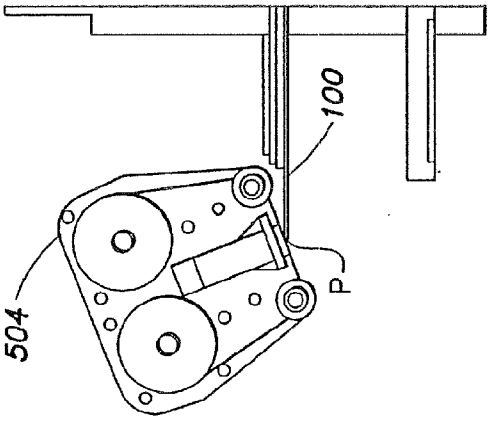

FIG. 10A

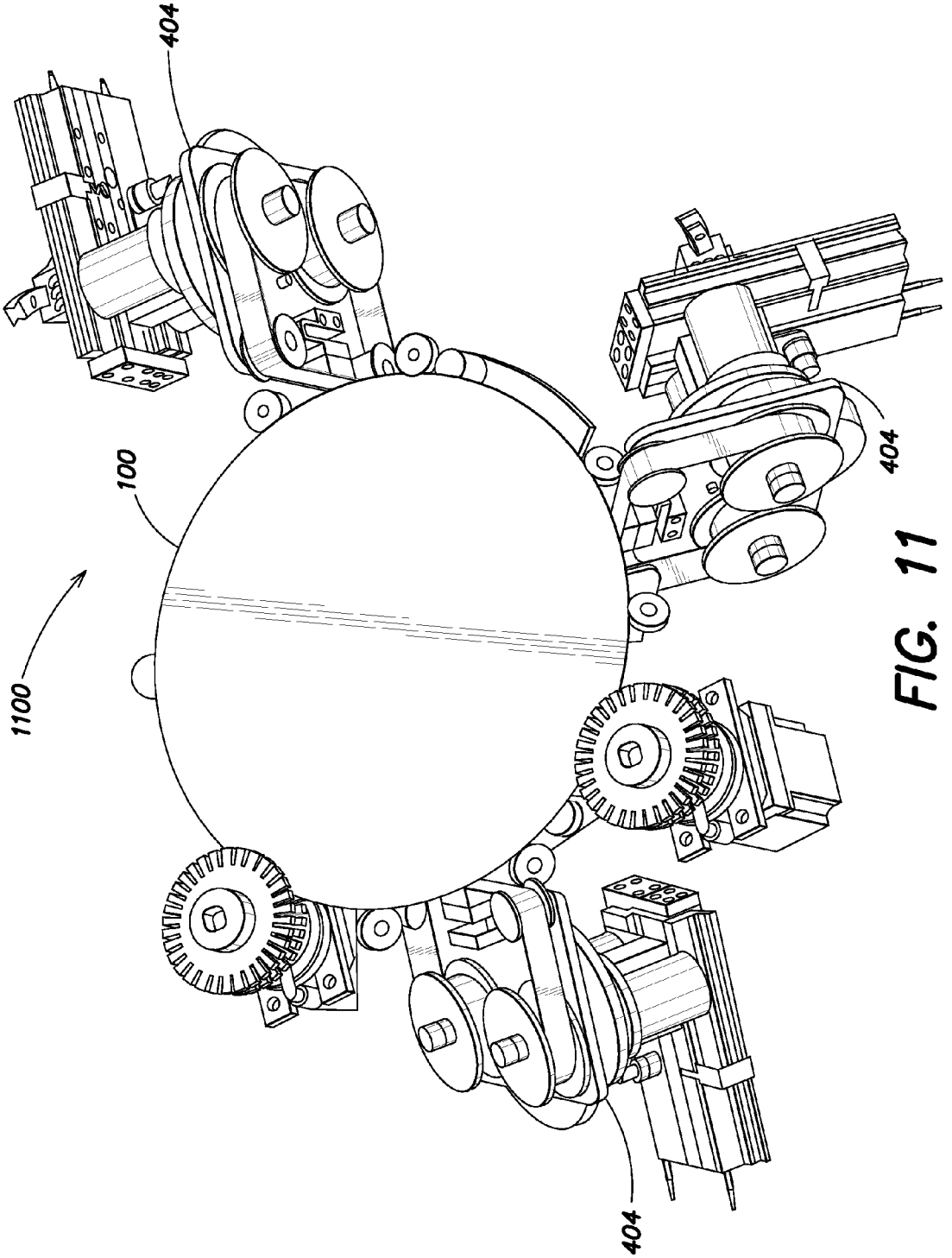

FIG. 11

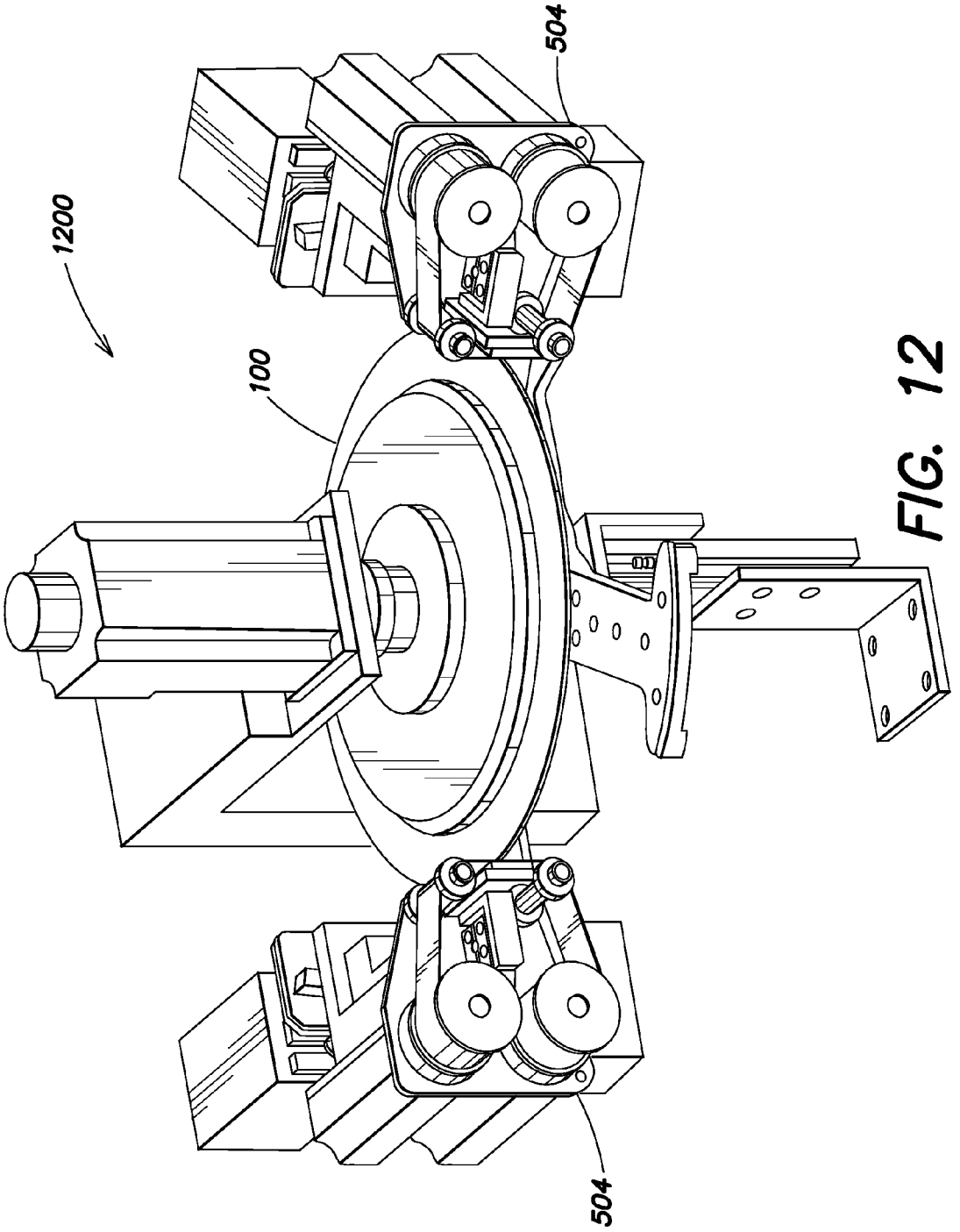

FIG. 12

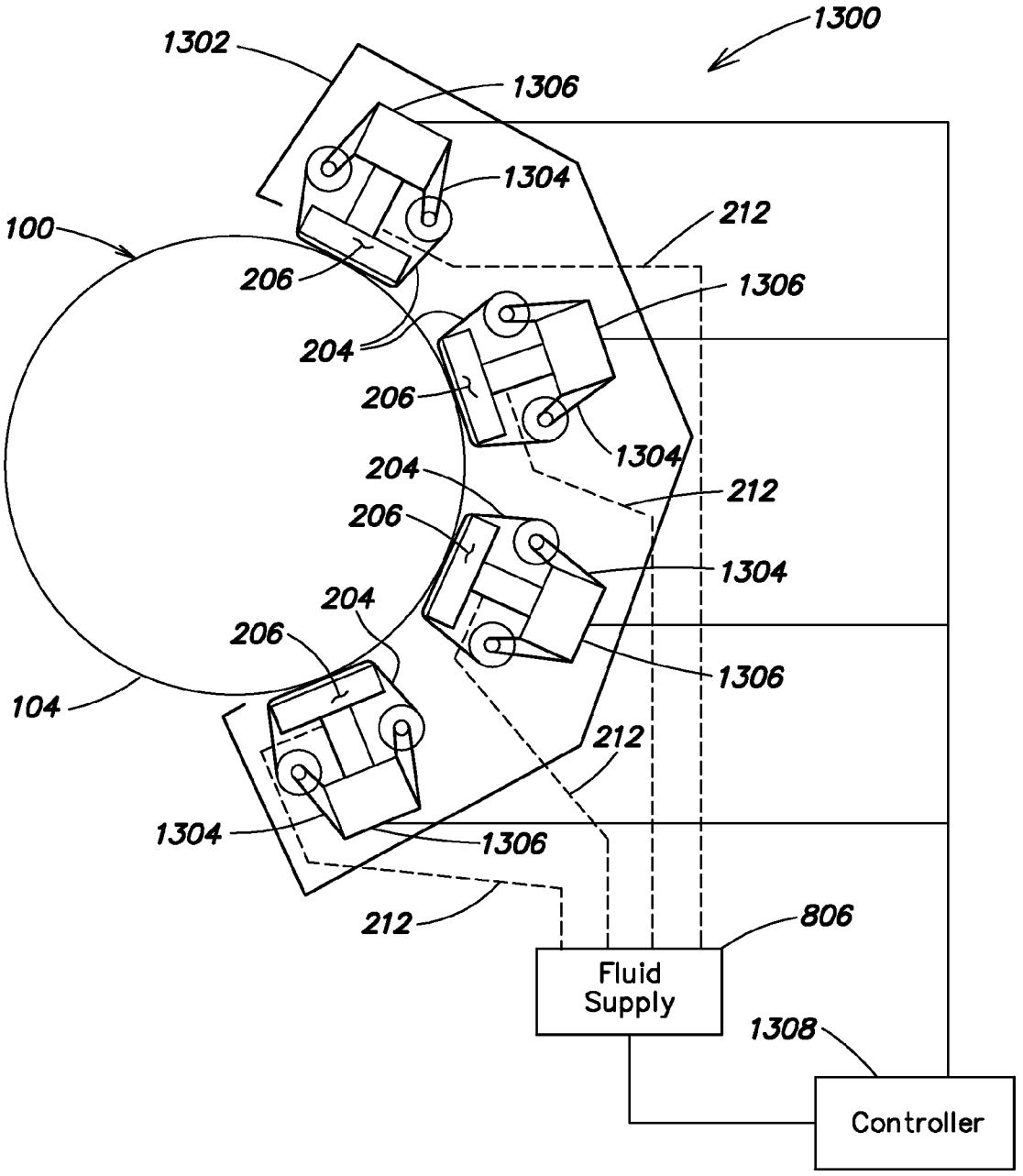
1300
1302
1306
1304
212
100
206
1306
204
206
1304
204
212
206
1304
204
206
1306
104
212
1304
1306
212
806
Fluid Supply
1308
Controller

FIG. 13

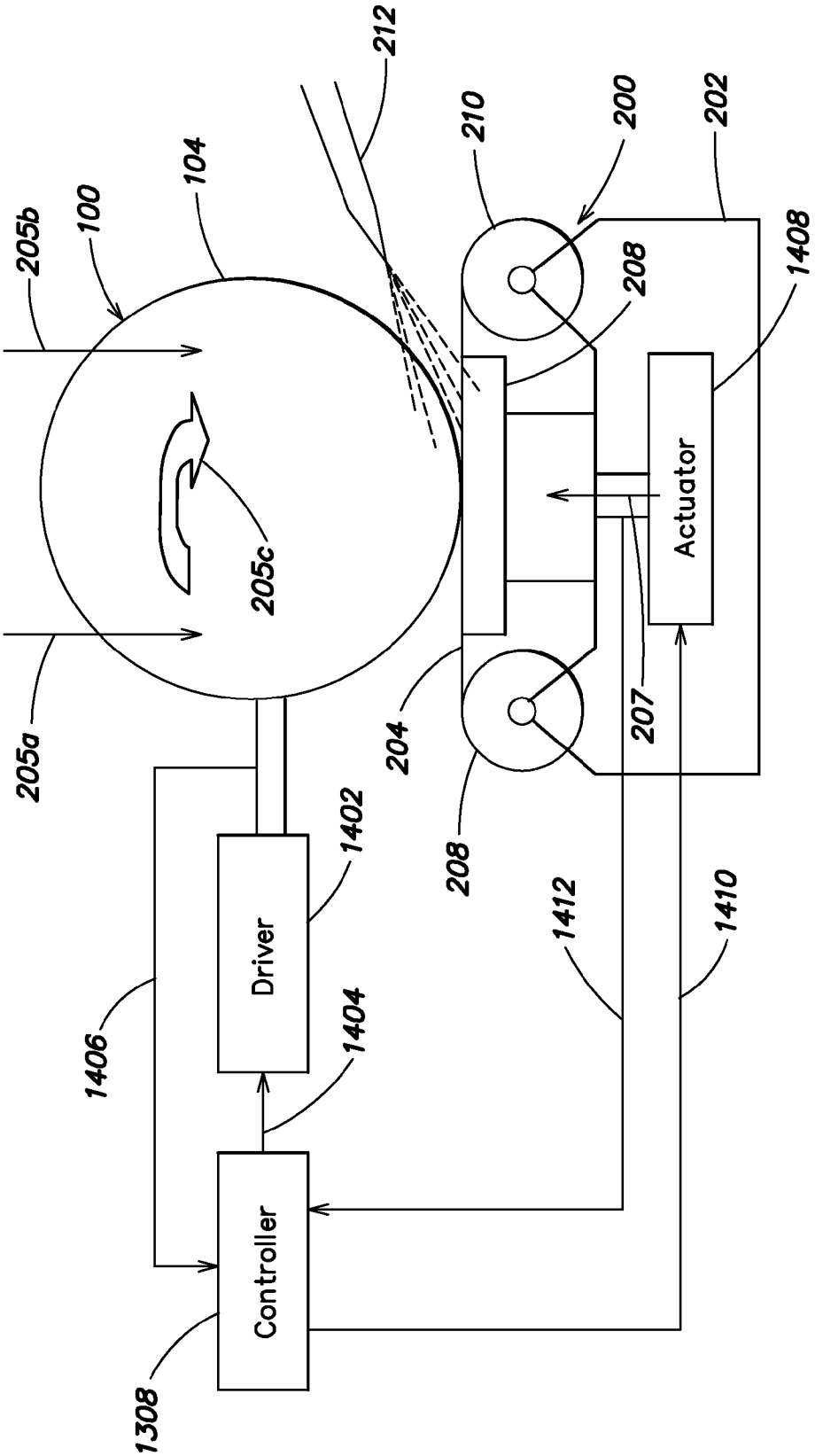
212
210
200
202
104
100
205b
208
1408
205c
Actuator
205a
204
207
208
1402
Driver
1412
1410
1406
1404
Controller
1308

FIG. 14

METHODS AND APPARATUS FOR POLISHING AN EDGE OF A SUBSTRATE

CROSS-REFERENCE TO RELATED APPLICATIONS

[0001] This patent application claims priority from U.S. Provisional Patent Application Ser. No. 60/787,438, filed Mar. 30, 2006 and entitled "METHODS AND APPARATUS FOR PROCESSING A SUBSTRATE" (Attorney Docket No. 10560/L/PPC/CMP/CKIM), which is hereby incorporated by reference herein in its entirety.

[0002] Further, the present application is related to the following commonly-assigned, co-pending U.S. patent applications, each of which is hereby incorporated herein by reference in its entirety for all purposes:

[0003] U.S. patent application Ser. No. 11/298,555 filed on Dec. 9, 2005 and entitled "METHODS AND APPARATUS FOR PROCESSING A SUBSTRATE" Attorney Docket No. 10414); and

[0004] U.S. patent application Ser. No. 11/299,295 filed on Dec. 9, 2005 and entitled "METHODS AND APPARATUS FOR PROCESSING A SUBSTRATE" (Attorney Docket No. 10121).

FIELD OF THE INVENTION

[0005] The present invention relates generally to substrate processing, and more particularly to methods and apparatus for polishing an edge of a substrate.

BACKGROUND

[0006] Conventional systems, which contact a substrate edge with an abrasive film to clean the edge, may not thoroughly polish or clean the edge. For example, the abrasive film may not sufficiently contact both bevels of the edge during cleaning. Additionally, the abrasive film may become worn from use, and therefore, lose its ability to sufficiently clean the substrate and require frequent replacement, which may affect semiconductor device manufacturing throughput. Accordingly improved methods and apparatus for cleaning an edge of a substrate are desired.

SUMMARY OF THE INVENTION

[0007] In a first aspect of the invention, a method of polishing an edge of a substrate is provided. The method includes (1) rotating a substrate against a polishing film so as to remove material from the edge of the substrate and (2) detecting an amount of one of energy and torque exerted in rotating the substrate against the polishing film. Embodiments of the method further include (3) determining an amount of material removed from the edge of the substrate based on the detected energy or torque exerted in rotating the substrate against the polishing film; (4) ascertaining a difference between the determined amount of material removed and a preset polish level; and (5) determining an amount of energy or torque to be exerted in rotating the substrate adapted to attain the preset polish level based on the difference between the determined amount of material removed and the preset polish level.

[0008] In a second aspect of the invention, an alternative method of polishing an edge of a substrate is provided. The method includes (1) rotating a substrate against a polishing film so as to remove material from the edge of the substrate and (2) detecting an amount of force exerted in pressing the polishing film against the substrate. Embodiments of the method include (3) determining an amount of material removed from the edge of the substrate based on the detected force exerted in pressing the polishing film against the rotating substrate; (4) ascertaining a difference between the determined amount of material removed and a preset polish level; and (5) determining a level of force to be applied to the polishing film adapted to attain the preset polish level based on the difference between the determined amount of material removed and the preset polish level and adjusting the force to the determined level.

[0009] In a third aspect of the invention, a system adapted to polish an edge of a substrate comprising is provided. The system includes (1) a substrate rotation driver adapted to rotate the edge of a substrate against a polishing film and (2) a first sensor coupled to the rotation driver adapted to detect one of an energy and torque exerted by the substrate rotation driver as it rotates the substrate against the polishing film. Embodiments of the system further include (3) a controller coupled to the first sensor and to the substrate rotation driver adapted to receive from the first sensor a signal indicative of the detected energy or torque exerted by the substrate rotation driver and adapted to transmit control signals to the substrate rotation driver based on the detected energy or torque exerted.

[0010] In a fourth aspect of the invention, an apparatus adapted to apply a preset pressure to a polishing film in contact with an edge of a substrate is provided. The apparatus includes (1) an actuator adapted to apply a preset pressure to the polishing film and (2) a controller coupled to the actuator and adapted to receive a signal indicative of a condition of the edge of the substrate, and to adjust a pressure applied by the actuator to the polishing film so as to maintain the preset pressure based on the received signal.

[0011] Other features and aspects of the present invention will become more fully apparent from the following detailed description, the appended claims and the accompanying drawings.

BRIEF DESCRIPTION OF THE FIGURES

[0012] FIG. **1** is a schematic illustration of a cross-section of a portion of a substrate.

[0013] FIG. **2** is a schematic illustration depicting an example embodiment of an edge cleaning apparatus according to the present invention.

[0014] FIGS. **3**A and **3**B are close-up front and side cross-sectional schematic views, respectively, of a portion of the edge cleaning apparatus of FIG. **2**.

[0015] FIG. **4** is a perspective view depicting an example embodiment of an edge cleaning apparatus according to the present invention.

[0016] FIG. **5** is a perspective view depicting another example embodiment of an edge cleaning apparatus according to the present invention.

[0017] FIG. **6** is a perspective view of a portion of the example embodiment depicted in FIG. **5**.

[0018] FIGS. **7**A and **7**B are close-up perspective views of different embodiments of replaceable cassettes for use with embodiments of the present invention.

[0019] FIGS. **8**A through **8**C are close-up perspective views of different embodiments of pads for use with embodiments of the present invention.

[0020] FIGS. **9**A through **9**C are plan views of examples of different possible head positions of the example edge polishing apparatus of FIG. **4**.

[0021] FIGS. **10**A through **10**C are plan views of examples of different possible head positions of the example edge polishing apparatus of FIG. **5**.

[0022] FIG. **11** is a perspective view of an embodiment of a multiple head edge polishing apparatus according to the present invention.

[0023] FIG. **12** is a perspective view of another embodiment of a multiple head edge polishing apparatus according to the present invention.

[0024] FIG. **13** is a perspective view of yet another embodiment of a multiple head edge polishing apparatus according to the present invention.

[0025] FIG. **14** is a schematic illustration depicting an example embodiment of an edge cleaning apparatus according to the present invention.

DETAILED DESCRIPTION

[0026] The present invention provides improved methods and apparatus for cleaning and/or polishing the edge of a substrate. With reference to FIG. **1**, a substrate **100** may include two major surfaces **102**, **102'** and an edge **104**. Each major surface **102**, **102'** of the substrate **100** may include a device region **106**, **106'** and an exclusion region **108**, **108'**. (Typically however, only one of the two major surfaces **102**, **102'** will include a device region and an exclusion region.) The exclusion regions **108**, **108'** may serve as buffers between the device regions **106**, **106'** and the edge **104**. The edge **104** of a substrate **100** may include an outer edge **110** and bevels **112**, **114**. The bevels **112**, **114** may be located between the outer edge **110** and the exclusion regions **108**, **108'** of the two major surfaces **102**, **102'**. The present invention is adapted to clean and/or polish the outer edge **110** and at least one bevel **112**, **114** of a substrate **100** without affecting the device regions **106**, **106'**. In some embodiments, all or part of the exclusion regions **108**, **108'** may be cleaned or polished as well.

[0027] The present invention provides a frame for supporting a film (e.g., an abrasive polishing film) or abrasive buffer against the edge **104** of a substrate **100** as the substrate **100** is rotated (e.g., by a vacuum chuck, drive rollers, etc.). The film may be pressed against the rotating substrate edge **104** using a pad pushed by an actuator and/or an inflatable pad. In either case, the pad and/or inflatable pad may be soft and/or include or develop contours to conform with the shape of the substrate edge **104**. Depending on the amount of force applied by the actuator, the resiliency of the pad selected, the amount of inflation of an inflatable pad, and/or the amount of tension on the film, a controlled amount of pressure may be applied to polish the edge **104**. Alternatively or additionally, the film may be under tension within the frame such that the film itself is adapted to apply a variable amount of tension to the substrate edge **104** and to contour to both the outer edge **110** and at least one of the bevels **112**, **114** (e.g., with or without additional support from a pad). Thus, the present invention provides precise control of an edge polish process which may be used to compensate for different edge geometries and changes in the substrate **100** as material is removed from the edge **104**.

[0028] In some embodiments, the frame may support multiple polishing heads, each head being adapted to support polishing film. The polishing heads may support different types of films (e.g., films of different abrasive grits) which may be used concurrently, in a predefined sequence, or at different times. The heads may be disposed in different positions and in different orientations (e.g., aligned with the edge **104**, normal to the edge **104**, angled relative to the edge **104**, etc.) to allow the supported films to polish different portions of the edge **104** of the rotating substrate **100**. The heads may be adapted to be oscillated or moved (e.g., angularly translated about a tangential axis of the substrate **100** and/or circumferentially relative to the substrate **100**) around or along the edge **104** by the frame so as to polish different portions of the edge **104**. In some embodiments, the heads may continuously oscillate around or along the rotating edge **104** of the substrate **100**. Each head may include an indexed spool of film and/or be contained in a replaceable cassette. An indexed spool may allow a precise amount of film to be advanced to position unused film for polishing. In some embodiments, two indexed spools may be used to allow film to be moved back and forth between the spools.

[0029] Additionally or alternatively, the present invention may include facilities to deliver fluids to the substrate edge **104** being polished. In some embodiments, one or more channels may be provided to direct chemicals or water to the substrate edge **104** to assist in the polishing and/or to wash away particles resulting from the polishing. The chemicals may be sprayed directly onto the substrate **100**, at the substrate/polishing film interface, and/or may be applied to and/or through the film and/or pad. The fluids may be sprayed from either or both sides of the substrate **100** and the present invention may employ gravity or suction to cause the runoff not to contaminate or contact other parts of the substrate **100** or apparatus of the invention. Further, energy (e.g., megasonic energy) may be applied to the substrate edge **104** via fluid carrying such energy.

[0030] The substrate **100** may be rotated in a horizontal plane. The edge **104** of the substrate **100** may be aligned with or normal to the polishing film, pad, and/or polishing head. In additional or alternative embodiments, the substrate **100** may be rotated in a vertical plane, other non-horizontal plane, and/or be moved between different planes of rotation.

[0031] In some embodiments, the driver(s) used to rotate the substrate **100** and the actuator used to push the pad and/or polishing film against the substrate edge **104** may be controlled by a controller. Likewise, operation of the indexed spool(s) and/or the fluid channels may also be under the direction of a controller. The controller may be adapted to receive feedback signals from the driver and/or actuator that indicate: (1) an amount of energy and/or torque being exerted to drive the substrate **100** (e.g., rotate a vacuum chuck holding the substrate **100**) and/or (2) an amount of force applied to the actuator to push the pad/polishing film against the substrate **100**, respectively. These feedback signals may be employed to determine an amount of material that has been removed from the edge of the substrate **100**, which may include, for example, whether a particular layer

of material has been removed and/or whether an intended edge profile has been reached. For example, a reduction in the torque of the rotating substrate **100** (or energy expended in rotating the substrate **100**) during a polishing procedure may indicate a reduction in friction between the substrate **100** and the polishing film and/or pad. The reduction in torque or rotational energy may correspond to an amount of material removed from the edge of the substrate **100** at or near points of contact between the substrate **100** and the polishing film and/or a characteristic edge profile (e.g., a shape, curvature or smoothness level at the edge of the substrate **100**).

[**0032**] Alternatively or additionally, a friction sensor positioned in contact with the edge of the substrate may provide signals indicative of an amount of material that has been removed from the substrate **100**.

[**0033**] Turning to FIG. **2**, a schematic view of an edge polishing apparatus **200** is depicted. A frame **202** supports and tensions a polishing film **204** in a plane perpendicular to the major surfaces **102**, **102'** of a substrate **100** such that the edge **104** of the substrate **100** may be pressed against (e.g., as indicated by the straight downward arrows **205***a*, **205***b*) the polishing film **204** and the polishing film **204** may contour to the substrate edge **104**. As indicated by the curved arrow **205***c*, the substrate **100** may be rotated against the polishing film **204**. The substrate **100** may be rotated at a rate ranging from about 50 to 300 RPM, for example, although other rates may be used. The substrate **100** may contact the polishing film **204** for about 15 to 150 seconds depending on the type of film used, the grit of the film, the rate of rotation, the amount of polishing required, etc. More or less time may be used. In some embodiments, the polishing film **204** may be supported by a pad **206** disposed adjacent a backside (e.g., a non-abrasive side) of the polishing film **204** and mounted on the frame **202**. As indicated by the straight upward pointing arrow **207**, the frame **202** including the tensioned polishing film **204** and/or the pad **206** may be pushed against the edge **104** of the substrate **100**. In some embodiments, the substrate **100** may be pushed against the polishing film with an amount of force ranging from about 0.5 lbs. to about 2.0 lbs. Other amounts of force may be used.

[**0034**] Additionally or alternatively, an additional length of the polishing film **204** may be supported and tensioned by spools **208**, **210** mounted to the frame **202**. A supply spool **208** may include unused polishing film **204** available to be unwound and pulled into position adjacent the substrate **100** while a take-up spool **210** may be adapted to receive used and/or worn polishing film **204**. One or both of the spools **208**, **210** may be indexed to precisely control the amount of polishing film **204** that is advanced. The polishing film **204** may be made from many different materials including aluminum oxide, silicon oxide, silicon carbide, etc. Other materials may also be used. In some embodiments, the abrasives used may range from about 0.5 microns up to about 3 microns in size although other sizes may be used. The abrasives may also be of different shapes and textures. Different widths of polishing film **204** ranging from about 1 inch to about 1.5 inches may be used (although other widths may be used). In one or more embodiments, the polishing film may be about 0.002 to about 0.02 of an inch thick and be able to withstand about 1 to 5 lbs. of tension in embodiments that use a pad **206** and from about 3 to about 8 lbs. of tension in embodiments without a pad. Other films having different thicknesses and strengths may be used. The spools **208**, **210** may be approximately 1 inch in diameter, hold about 500 inches of polishing film **204**, and may be constructed from any practicable materials such as polyurethane, polyvinyl difloride (PVDF), etc. Other materials may be used. The frame **202** may be constructed from any practicable materials such as aluminum, stainless steel, etc.

[**0035**] In some embodiments, one or more fluid channels **212** (e.g., a spray nozzle or bar) may be provided to deliver chemicals and/or water to aid in the polishing/cleaning of the substrate edge **104**, lubricate the substrate, and/or to wash away removed material. The fluid channel **212** may be adapted to deliver fluid to the substrate **100**, to the polishing film **204**, and/or to the pad **206**. The fluids may include deionized water which may serve as a lubricant and to flush particles away. A surfactant and/or other known cleaning chemistries may also be included. In some embodiments, sonic (e.g., megasonic) nozzles may be used to deliver sonicated fluids to the substrate edge **104** to supplement the cleaning. Fluid also may be delivered through the polishing film **204** and/or pad **206** to the edge **104**.

[**0036**] Turning to FIGS. **3**A and **3**B, close-up front and side cross-sectional schematic views, respectively, of the polishing film **204** and pad **206** of FIG. **2** are depicted. Note that the forces (indicated by the straight arrows) cause the polishing film **204** and the pad **206** to contour and conform to the edge **104** of the substrate **100**. In some embodiments, if the substrate **100** was not present, the pad **206** would have a flat surface where the substrate **100** is shown compressing the pad **206**. Likewise, if the substrate **100** was not present, the polishing film **204** would lie flat and be represented by a straight line in both views.

[**0037**] Turning now to FIGS. **4** and **5**, two additional alternative embodiments of an edge polishing apparatus **400**, **500** are depicted. As shown in FIG. **4**, an example edge polishing apparatus **400** may include a base or frame **402** that includes a head **404** which supports polishing film **204** tensioned between spools **208**, **210** and further supported by a pad **206**. As shown, the pad **206** may by mounted to the head **404** via a biasing device **406** (e.g., a spring). The edge polishing apparatus **400** of FIG. **4** also may include one or more drive rollers **408** (two shown) and guide rollers **410** (two shown) that are adapted to rotate the edge **104** of the substrate **100** against the polishing film **204**. The drive rollers **408** may themselves each be driven by drivers **412** (e.g., motors, gears, belts, chains, etc.).

[**0038**] The drive rollers **408** and guide rollers **410** may include a groove that allows the rollers **408**, **410** alone to support the substrate **100**. In some embodiments the groove within the drive rollers **408** may have a diameter of approximately 2.5 inches and the groove within the guide rollers **410** may have a diameter of approximately 1 inch. Other dimensions are possible. The area of the drive rollers **408** in contact with the substrate **100** may include texturing or cross-grooves to allow the drive rollers **408** to grip the substrate **100**. The drive rollers **408** and guide rollers **410** may be constructed from materials such as polyurethane, polyvinyl difloride (PVDF), etc. Other materials may be used.

[**0039**] As shown in FIG. **5**, another example edge polishing apparatus **500** may include a base or frame **502** that

includes a head **504** which supports polishing film **204** tensioned between spools **208**, **210** and further supported by a pad **206**. As shown, the pad **206** may by mounted to the head **504** via an actuator **506** (e.g., a pneumatic slide, hydraulic ram, servo motor driven pusher, etc.). The edge polishing apparatus **500** of FIG. **5** also may include a vacuum chuck **508** coupled to a driver **510** (e.g., motor, gear, belt, chain, etc.). An advantage of the embodiment depicted in FIG. **5** is that the apparatus **500** does not need to contact the edge **104** being polished. Thus, the potential of particles accumulating on drive rollers and being re-deposited on the edge **104** is eliminated. The need to clean rollers also is eliminated. Further, the possibility of rollers damaging or scratching the edge is also eliminated. By holding the substrate in a vacuum chuck, high speed rotation without significant vibration may be achieved.

[**0040**] Turning now to FIGS. **6** through **8**B, some details of features of the example embodiments of FIGS. **4** and **5** are described. Note that features from the different embodiments may be combined in many different practicable ways to serve different design principals or concerns.

[**0041**] FIG. **6** depicts details of the frame **502** including the head **504** of FIG. **5**. As described above, a head **504** supports polishing film **204** tensioned between spools **208**, **210**. The frame **502** (that includes head **504**) may be adapted to be angularly translated (relative to an axis that is tangential to the edge **104** of a substrate **100** held in the edge polishing apparatus **500** (FIG. **5**)) by a driver **600** (e.g., a servo motor) and pivot **602**. The angular translation of the frame (and polishing film **204**) is described in more detail below with respect to FIGS. **9**A through **10**C.

[**0042**] Additionally, the spools **208**, **210** that are mounted to the head **504**, may be driven by one or more drivers **604** (e.g., servo motors). The drivers **604** may provide both an indexing capability to allow a specific amount of unused polishing film **204** to be advanced or continuously fed to the substrate edge, and a tensioning capability to allow the polishing film to be stretched taught and to apply pressure to the substrate edge.

[**0043**] As can more clearly be seen in FIG. **6** (as compared to FIG. **5**), the optional pad **206** may by mounted to the head **504** via an actuator **506** that is adapted to adjustably press and contour the polishing film **204** against a substrate edge **104** (FIG. **5**). Further, one or more support rollers **606** may also be mounted to the head **504** to guide and align the polishing film **204** in a plane perpendicular to the major surface **102** (FIG. **1**) of a substrate **100** held in the edge polishing apparatus **500** (FIG. **5**).

[**0044**] Note that in the embodiment depicted in FIGS. **5** and **6**, the length of the polishing film **204** is disposed orthogonal to the edge **104** of a substrate **100** being polished. This is in contrast to the embodiment depicted in FIG. **2**, wherein the longitudinal direction of the polishing film **204** is aligned with the edge **104** of a substrate **100** being polished. Other polishing film orientations and configurations may be employed. For example, the polishing film **204** may be held diagonally relative to the major surface **102** of the substrate **100**.

[**0045**] Turning to FIGS. **7**A and **7**B, close-up perspective views of two different embodiments of replaceable cassettes **700**A, **700**B are depicted. Cassettes **700**A, **700**B may be adapted to provide the features of the head **404** and polishing film **204** in a disposable, refillable, and/or replaceable package which may be quickly and easily mounted on and/or removed from the frames **402**, **502** of different edge polishing apparatuses **400**, **500**.

[**0046**] As shown in FIG. **7**A, the cassette **700**A may include head **404** which supports polishing film **204** which spans from supply reel **208** to take-up reel **210**. The polishing film **204** may be guided and aligned by support rollers **606** mounted to the head **404**. A pad **206** may be provided to further support the polishing film **204** as described above. Also as described above, a biasing device **406** (e.g., a spring) may be employed to mount the pad **206** to the head **404** to provide flexible, dynamic counter-pressure to the pad **206**. Alternatively or additionally, an adjustable actuator **506** (FIG. **6**) may be used to push the pad **206** against the polishing film **204** or to push the entire head **404** toward the substrate **100**.

[**0047**] In yet another alternative embodiment, as shown in FIG. **7**B, instead of a pad **206**, the head **404** may simply rely on the tension of the polishing film **204** to provide lateral pressure to the substrate edge **104** (FIG. **1**). In some embodiments, the head **404** may include a notch **702** as shown in FIG. **7**B to accommodate the substrate **100**.

[**0048**] Turning to FIGS. **8**A and **8**B, two different alternative embodiments of pads **206**A, **206**B are depicted. In addition to a pad **206** (FIG. **6**) that has a flat surface co-planar with the polishing film **204** when a substrate is not present, a pad **206**A may include a concave surface that matches the contour of the edge **104** of a substrate **100**. Alternatively, as shown in FIG. **8**B, the pad **206**B may include a double concave surface to better match the contour of the edge **104** of a substrate **100**. In yet other alternative embodiments, a pad **206** may include a shaped groove that precisely matches the contour of the edge **104** of a substrate **100** including the bevels **112**, **114** and outer edge **110** (FIG. **1**).

[**0049**] The pads **206**, **206**A, **206**B may be made of material such as, for example, an acetal resin (e.g., Delrin® manufactured by DuPont Corporation), PVDF, polyurethane closed cell foam, silicon rubber, etc. Other materials may be used. Such materials may have a resilience or an ability to conform that is a function of the thickness or density of the pad. The material may be selected based upon its resilience, which, in turn, may be selected based upon the type of polishing required.

[**0050**] In some embodiments, the pad **206**, **206**A, **206**B may have an adjustable amount of ability to conform to the substrate's edge. For example the pad **206**, **206**A, **206**B may be or include an inflatable bladder such that by adding more air or liquid or other fluid, the pad becomes harder and by reducing the amount of air or liquid or other fluid in the bladder, the pad becomes more conforming. FIG. **8**C depicts an embodiment of a pad **206**C that includes an inflatable bladder **802** that may be filled (and/or emptied) via a fluid channel **804** with fluid from a fluid supply **806**. In some embodiments, the fluid supply **806** may inflate/deflate the bladder **802** under the direction of an operator or a programmed and/or user operated controller. In such embodiments, an elastomeric material such as silicon rubber or the like, may be used for the bladder **802** to further enhance the pad's ability to stretch and conform to the substrate's edge

104. Such an embodiment would allow an operator/controller to precisely control how far beyond the bevels **112**, **114** (if at all) and into the exclusion region **108** and/or **108'** (FIG. **1**) the polishing film **204** is made to contact the substrate **100** by, e.g., limiting the amount of fluid pumped into the bladder **802**. For example, once a substrate outer edge **110** is placed against a pad **206**C with a deflated bladder **802**, the bladder **802** may be inflated so that the pad **206**C is forced to wrap around and conform to the outer edge **110** and bevel(s) **112**, **114** of the substrate **100** without wrapping around to the device region **106**, **106'** of the substrate **100**. Note that in some embodiments, multiple bladders may be used in a pad and that differently shaped inflatable bladders may be used within differently shaped pads **206**, **206**A, **206**B.

[**0051**] In some embodiments, fluids used to aid in the polishing may be delivered to the substrate edge via the pads **206**, **206**A, **206**B. A fluid channel may be provided to drip or spray the fluid on or into the pads. Alternatively, an inflatable pad may include a bladder with a semi-permeable membrane that allows fluid to be slowly released and transmitted to the polishing film **204** (e.g., through the pad). In such embodiments, the pads **206**, **206**A, **206**B may be covered by, made of, and/or include material that absorbs and/or retains the fluids used (e.g., polyvinyl alcohol (PVA), etc.).

[**0052**] FIGS. **9**A through **9**C and FIGS. **10**A through **10**C depict examples of different possible head positions of the alternative edge polishing apparatuses **400**, **500** respectively, described above. The present invention is adapted to bring polishing film **204** in contact with the bevels **112**, **114**, and outer edge **110** of a substrate **100** without contacting the device region **106** of the substrate **100**. In operation, this is achieved by angularly translating a head **404**, **504** (and consequently, a portion of polishing film in contact with and contoured to the edge **104** of a substrate **100**) around an axis that is tangential to the outer edge **110** of the substrate **100** as it is rotated. Referring to FIGS. **9**A through **9**C and FIGS. **10**A through **10**C, this axis of angular translation may be represented by a line extending perpendicular out of the paper upon which the FIGs. are drawn at the point labeled "P." The heads **404**, **504** may be held in various positions to clean desired portions of the substrate edge **104** as the substrate **100** is rotated. In some embodiments, the heads **404**, **504** may be adapted to continuously or intermittently oscillate between the various positions depicted and/or other positions. The heads **404**, **504** may be moved on the frame **502** by drivers **600** (FIG. **6**) under the direction of a programmed or user operated controller. Alternatively, the heads **404**, **504** may be fixed and/or only adjusted while the substrate is not being rotated. In yet other embodiments, the substrate may be held fixed while the heads are oscillated (as described above) as well as rotated circumferentially around the substrate **100**. Further, the polishing film **204** may be mounted on the heads **404**, **504** in a continuous loop and/or the polishing film **204** may be continuously (or intermittently) advanced to polish and/or increase the polishing effect on the substrate edge **104**. For example, the advancement of the film **204** may be used to create and/or enhance the polishing motion. In some embodiments the film **204** may be oscillated back and forth to polish and/or enhance the polishing effect on a stationary or rotating substrate **100**. In some embodiments, the film **204** may be held stationary during polishing. Further, the film **204** tension and/or force **207** (FIG. **2**) may be varied based on various factors including, for example, the angle and/or position of the polishing film **204**, the polishing time, the materials used in the substrate, the layer being polished, the amount of material removed, the speed at which the substrate is being rotated, the amount of current being drawn by the driver rotating the substrate, etc. Any combination of the above described polishing motions and/or methods that are practicable may be employed. These methods provide additional control over the edge polish process which can be used to compensate for geometry and changes in the material being removed as the film **204** is rotated/move about or relative to the edge **104**.

[**0053**] Turning to FIGS. **11** through **12**, additional embodiments of an edge polishing apparatus are depicted. FIG. **11** depicts an edge polishing apparatus **1100** including three heads **404**, FIG. **12** depicts an edge polishing apparatus **1200** including two heads **504**, and FIG. **13** depicts an edge polishing apparatus **1300** including four heads **1304**. As suggested by the drawings, any number and type of heads **404**, **504**, **1304** may be used in any practicable combination. In addition, in such multi-head embodiments, each head **404**, **504**, **1304** may used a differently configured or type of polishing film **204** (e.g., different grits, materials, tensions, pressures, etc.). Any number of heads **404**, **504**, **1304** may be used concurrently, individually, and/or in a sequence. Different heads **404**, **504**, **1304** may be used for different substrates **100** or different types of substrates. For example, a first head **404** with a stiff biasing device **406** supporting a pad **206** such as the concave pad **206**B and a coarse grit polishing film **204** may initially be used to remove a relatively large amount of rough material from the substrate bevels **112**, **114** (FIG. **1**). The first head **404** may be appropriately positioned to access the bevels **112**, **114**. After cleaning with the first head **404** is completed, the first head **404** may be backed away from the substrate **100**, and a second head **504** with a fine grit polishing film **204** (and without a pad) may be moved into position to polish the bevels **112**, **114** and the outer edge **110**.

[**0054**] After cleaning one or more substrates **100**, the portion of the polishing film **204** employed for such cleaning may become worn. Therefore, the take-up reel **210** (FIG. **4**) may be driven to draw the polishing film **204** by a fixed amount from the supply reel **210** (FIG. **4**) toward the take-up reel **210**. In this manner, an unused portion of the polishing film **204** may be provided between the take-up reel **210** and supply reel **208**. The unused portion of the polishing film **204** may be employed to subsequently clean one or more other substrates **100** in a manner similar to that described above. Consequently, the apparatus **1100**, **1200** may replace a worn portion of polishing film **204** with an unused portion with little or no impact on substrate processing throughput. Likewise, if replaceable cassettes **700**A are employed, impact on throughput may be minimized by quickly replacing the cassettes **700**A when all the polishing film **204** in the cassette **700**A is used.

[**0055**] Regarding the example embodiment of an edge polishing apparatus **1300** of FIG. **13** specifically, a frame **1302** that supports multiple heads **1304** is depicted in schematic form. The heads **1304** are each mounted to the frame **1302** and each include an actuator **1306** (e.g., pneumatic piston, servo driven slide, hydraulic ram, etc.) adapted to press a pad **206** and a length of polishing film **204** against the edge **104** of a substrate **100** in response to a control

signal from a controller **1308** (e.g., a programmed computer, an operator directed valve system, an embedded real time processor, etc.). Note that the controller **1308** is coupled (e.g., electrically, mechanically, pneumatically, hydraulically, etc.) to each of the actuators **1306**.

[**0056**] In addition, a fluid supply **806** may be coupled to and under the control of the controller **1308**. The fluid supply **806** may be controlled to independently deliver fluids (e.g., DI water, cleaning chemistry, sonicated fluids, gas, air, etc.) to each of the heads **1304** via one or more fluid channels **212**. Under the direction of the controller **1308**, various fluids may be selectively delivered to the pads **206**, the polishing film **204**, and/or the substrate edge **104** via the fluid channels **212**. The fluid may be for use in polishing, lubricating, particle removal/rinsing, and/or inflating a bladder **802** (FIG. **8**C) within the pads **206**. For example, in some embodiments, the same fluid delivered through a permeable pad **206** may be used for both polishing and inflating the pad **206** while a different fluid, delivered to the same head **1304** via a second channel (not shown) is used for rinsing and lubricating.

[**0057**] Turning to FIG. **14**, a schematic view of an embodiment of the present invention similar to the example edge polishing apparatus **200** of FIG. **2** is depicted. As with the embodiment of FIG. **2**, a frame **202** supports and tensions a polishing film **204** in a plane perpendicular to the major surfaces **102**, **102'** (FIG. **1**) of a substrate **100** such that the edge **104** of the substrate **100** may be pressed against (e.g., as indicated by the straight downward arrows **205***a*, **205***b*) the polishing film **204** and the polishing film **204** may contour to the substrate edge **104**. As indicated by the curved arrow **205***c*, the substrate **100** may be rotated against the polishing film **204**. The polishing film **204** may be supported by a pad **206** disposed adjacent a backside of the polishing film **204** and mounted on the frame **202**. As indicated by the straight upward pointing arrow **207**, the frame **202** including the tensioned polishing film **204** and/or the pad **206** may be pushed against the edge **104** of the substrate **100**. The polishing film **204** may be supported and tensioned by spools **208**, **210** mounted to the frame **202**. A supply spool **208** may include unused polishing film **204** available to be unwound and pulled into position adjacent the substrate **100** while a take-up spool **210** may be adapted to receive used and/or worn polishing film **204**. One or both of the spools **208**, **210** may be indexed to precisely control the amount of polishing film **204** that is advanced. One or more fluid channels **212** may be provided to deliver chemicals and/or water to aid in the polishing/cleaning of the substrate edge **104**, lubricate the substrate, and/or to wash away removed material. The fluid channel **212** may be adapted to deliver fluid to the substrate **100**, to the polishing film **204**, and/or to the pad **206**.

[**0058**] The embodiment of FIG. **14** further includes a controller **1308** (e.g., a software driven computer, a programmed processor, a gate array, a logic circuit, etc.) adapted to direct the operation of a driver **1402** which may be used to rotate the substrate **100**. The driver **1402** may be embodied, for example, as a motor adapted to rotate a vacuum chuck, drive rollers, etc. The controller **1308** may transmit or output a control and/or power signal to the driver **1402** via a signal line **1404**. Further, the controller **1308** may be adapted to receive one or more feedback or information signals from the driver **1402** via one or more signal lines **1406**. As noted above, the feedback or information signals from the driver **1402** may provide various indications about the status of the driver **1402**, the edge polishing apparatus **202**, and/or the substrate **100**. For example, the rotational speed of the driver **1402** may be determined from a signal that indicates the amount of current drawn by a motor within the driver **1402**. Alternatively, a sensor (not shown) within the driver **1402** may be employed to generate a signal indicative of the torque of the platform (e.g., vacuum chuck) holding the substrate **100** as it is rotated by the driver **1402** and/or the energy being exerted by the driver **1402** to rotate the substrate **100** via the platform.

[**0059**] The information signal(s) on the signal line(s) **1406** may be used to monitor the polishing progress of the edge polishing apparatus **202**. For example, a change in the current drawn by a motor within the driver **1402** as indicated by a feedback signal on signal line **1406** may be interpreted by the controller **1308** as an indication that the amount of friction between the edge polishing apparatus **202** and the substrate has changed. Assuming a constant force **207** is being maintained by the edge polishing apparatus **202** on the substrate **100**, the controller **1308** may interpret the change in the amount of friction to mean that different material is now being polished. A substrate **100** that includes multiple layers of material including, for example, a film layer, may be comprised of different materials. Thus, the controller **1308** may determine that the change in current indicated on the signal line **1406** means that a layer of material has been removed from (e.g., polished off of) the edge **104** of the substrate **100**. Additionally or alternatively, depending on the characteristics of the edge **104** of the substrate **100**, the controller **1308** may interpret a change in the amount of friction to mean that a certain amount of material has been removed from the edge **104** and consequently, that the edge profile has changed.

[**0060**] The embodiment of FIG. **14** further includes an actuator **1408** adapted to be directed by the controller **1308**. The actuator **1408** may be used to press the pad **206** and/or film **204** against the rotating the substrate **100**. The actuator **1408** may be adapted to apply a constant force against the substrate or a variable force determined by the controller **1308**. The actuator **1408** may be embodied, for example, as a pneumatic piston, a hydraulic ram, an electric solenoid, etc. The controller **1308** may transmit or output a control and/or power signal to the actuator **1408** via a signal line **1410**. Further, the controller **1308** may be adapted to receive one or more feedback or information signals from the actuator **1408** via one or more signal line(s) **1412**. The feedback or information signals from the actuator **1408** may provide various indications about the status of the actuator **1408**, driver **1402**, and/or the substrate **100**. For example, the amount of force applied by the actuator **1408** may be determined from a signal that indicates the amount of current drawn by a solenoid within the actuator **1408**. Alternatively, a sensor (e.g., a transducer, not shown) within the actuator **1408** may be employed to generate a signal indicative of the energy being exerted by the actuator **1408** to apply force to the substrate **100**.

[**0061**] As with the information signal(s) on signal line(s) **1406**, the signal(s) on line(s) **1412** may be used to monitor the polishing progress of the edge polishing apparatus **202**. For example, as material is removed from the substrate **100** and the diameter of the substrate **100** is reduced, an actuator

1408 adapted to automatically maintain a fixed amount of force on the substrate **100** may adjust the position of, and/or applied force to, the pad **206** and/or polishing film **204**. A signal on line **1412** may indicate this change and the controller **1308** may make a determination that a certain amount of material has been removed from (e.g., polished off of) the substrate **100** based on the signal.

[**0062**] The controller **1308** may use the feedback signals provided by the driver **1402** to determine whether a preset endpoint for edge polishing has been reached (e.g., a desired edge profile) and/or a difference between a current state of the edge **104** and the preset endpoint. For example, if the endpoint has been reached or the current state of the edge **104** is close to the endpoint (e.g., as measured in an amount of material that has been removed from the edge **104**), then the controller **1308** may transmit signals to the driver **1402** to reduce the rotation speed of the substrate **100** so as to, in the former case, prevent further removal of material from the edge **104** or, in the latter case, to decrease the rate at which material is removed from the edge **104**. Similarly, the controller **1308** may use feedback signals provided by the actuator **1408** to determine whether the preset endpoint has been reached or is close to being reached. The controller **1308** may transmit signals to the actuator **1408** to reduce an amount of force applied to the pad **206** and/or polishing film **204** to halt or slow removal of further material from the edge **104** in the event of such a determination.

[**0063**] The foregoing description discloses only exemplary embodiments of the invention. Modifications of the above disclosed apparatus and methods which fall within the scope of the invention will be readily apparent to those of ordinary skill in the art. For instance, although only examples of cleaning a round substrate are disclosed, the present invention could be modified to clean substrates having other shapes (e.g., a glass or polymer plate for flat panel displays). Further, although processing of a single substrate by the apparatus is shown above, in some embodiments, the apparatus may process a plurality of substrates concurrently. Further, the edge polishing apparatus **200** of the present invention may be integrated to other devices. For example, the apparatus **200** may be integrated into a major surface polisher or a substrate cleaner. Integrating a edge polishing module into an output station of a substrate polisher (e.g., the APPLIED MATERIALS, INC. Reflexion Oxide CMP System) exchanger offers a number of advantages. Such integration can take advantage of the substrate exchanger so that no additional substrate transport is required. Facilities such as de-ionized water and drains are already resident and access to the module through the polisher windows may be easily available. Additionally, such integration may be done without impacting the footprint of the tool. Further, particularly with applications which have relatively long process cycle times such as, for example, copper applications, there is sufficient time to polish the edges of the substrate without degrading the overall throughput of the tool.

[**0064**] Accordingly, while the present invention has been disclosed in connection with exemplary embodiments thereof, it should be understood that other embodiments may fall within the spirit and scope of the invention, as defined by the following claims.

The invention claimed is:

1. A method of polishing an edge of a substrate comprising:

rotating a substrate against a polishing film so as to remove material from the edge of the substrate; and

detecting an amount of one of energy and torque exerted in rotating the substrate against the polishing film.

2. The method of claim 1, further comprising:

determining an amount of material removed from the edge of the substrate based on the detected energy or torque exerted in rotating the substrate against the polishing film.

3. The method of claim 2, further comprising:

ascertaining a difference between the determined amount of material removed and a preset polish level.

4. The method of claim 3, further comprising:

determining an amount of energy or torque to be exerted in rotating the substrate adapted to attain the preset polish level based on the difference between the determined amount of material removed and the preset polish level.

5. The method of claim 4, further comprising:

adjusting the amount of energy or torque exerted in rotating the substrate to the determined amount.

6. The method of claim 3, further comprising:

ascertaining from the amount of material that has been removed from the substrate edge whether a layer of material has been removed.

7. The method of claim 1, further comprising:

reducing friction between the substrate and the polishing film by delivering a fluid to the polishing film.

8. The method of claim 1, further comprising:

removing particles from the edge of the substrate by delivering a fluid to the polishing film during contact with the substrate.

9. A method of polishing an edge of a substrate comprising:

rotating a substrate against a polishing film so as to remove material from the edge of the substrate; and

detecting an amount of force exerted in pressing the polishing film against the substrate.

10. The method of claim 9, further comprising:

determining an amount of material removed from the edge of the substrate based on the detected force exerted in pressing the polishing film against the rotating substrate.

11. The method of claim 10, further comprising:

ascertaining a difference between the determined amount of material removed and a preset polish level.

12. The method of claim 11, further comprising:

determining a level of force to be applied to the polishing film adapted to attain the preset polish level based on the difference between the determined amount of material removed and the preset polish level; and

adjusting the force to the determined level.

13. A system adapted to polish an edge of a substrate comprising:

a substrate rotation driver adapted to rotate the edge of a substrate against a polishing film; and

a first sensor coupled to the rotation driver adapted to detect one of an energy and torque exerted by the substrate rotation driver as it rotates the substrate against the polishing film.

14. The system of claim 13, further comprising:

a controller coupled to the first sensor and to the substrate rotation driver, adapted to receive from the first sensor a signal indicative of the detected energy or torque exerted by the substrate rotation driver and adapted to transmit control signals to the substrate rotation driver based on the detected energy or torque exerted.

15. The system of claim 14, wherein the controller is adapted to determine an amount of material that has been removed from the substrate based on the received signal.

16. The system of claim 13, further comprising:

an actuator adapted to press the polishing film against the rotating substrate.

17. The system of claim 16, wherein the actuator is adapted to provide a signal indicative of a force exerted by the actuator in pressing the polishing film against the rotating substrate.

18. The system of claim 17, wherein the controller is coupled to the actuator and is adapted to determine a force for the actuator to apply to the polishing film based on the signal provided by the actuator.

19. The system of claim 16, wherein the actuator is adapted to press the polishing film against the rotating substrate for a period of time ranging from 15 to 150 seconds to obtain a preset level of polish.

20. The system of claim 18, wherein the actuator is adapted to apply a force of about 0.5 pounds to 2.0 pounds to the polishing film to obtain a preset level of polish.

21. The system of claim 14, further comprising:

a fluid supply coupled to the controller and to the polishing film;

wherein the controller is adapted to direct the fluid supply to deliver fluid onto the polishing film.

22. The system of claim 21, wherein the fluid is supplied to a point of contact between the polishing film and the edge of the substrate.

23. An apparatus adapted to apply a preset pressure to a polishing film in contact with an edge of a substrate comprising:

an actuator adapted to apply a preset pressure to the polishing film; and

a controller coupled to the actuator and adapted to receive a signal indicative of a condition of the edge of the substrate, and to adjust a pressure applied by the actuator to the polishing film so as to maintain the preset pressure based on the received signal.

24. The apparatus of claim 23, wherein the signal indicates whether a layer of material has been removed from the edge of the substrate.

25. The apparatus as recited in claim 23, further comprising:

a driver coupled to the controller adapted to rotate the substrate against the polishing film, the driver adapted to generate a signal indicative of the condition of the edge of the substrate.

26. The apparatus of claim 25, wherein the controller is coupled to and adapted to direct operation of the driver in response to a signal received from the at least one sensor so as to attain a preset polish level.

* * * * *