Dec. 6, 1932. M. AUDIFFREN ET AL 1,889,817

ROTARY REFRIGERATING MACHINE

Filed Oct. 23, 1928 3 Sheets-Sheet 1

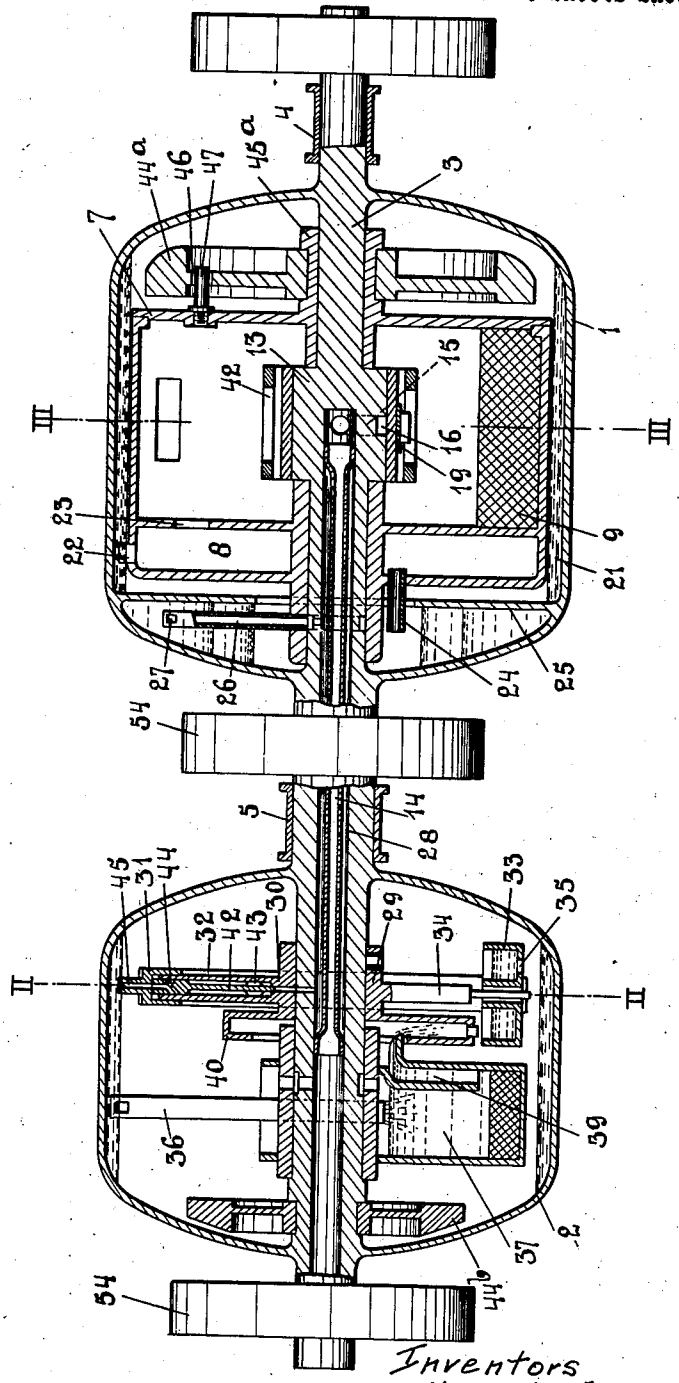

Fig.1

Inventors
Marcel Audiffren
Albert Singrun
By C. F. Wenderoth
Atty

Dec. 6, 1932. M. AUDIFFREN ET AL 1,889,817

ROTARY REFRIGERATING MACHINE

Filed Oct. 23, 1928 3 Sheets-Sheet 2

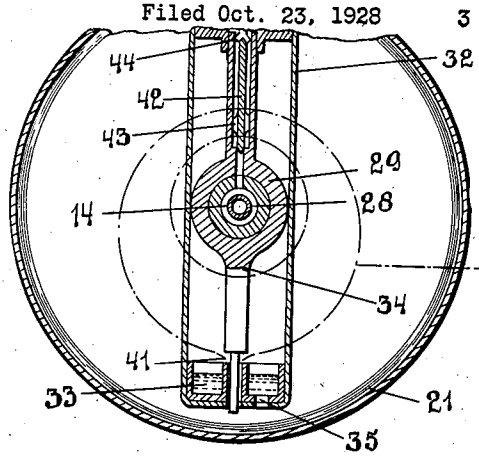

Fig. 2.

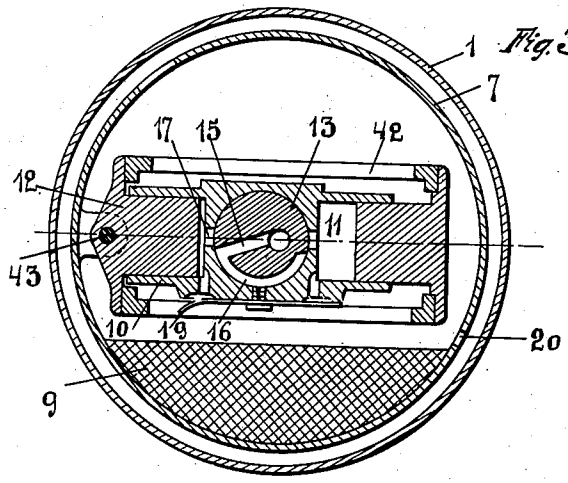

Fig. 3

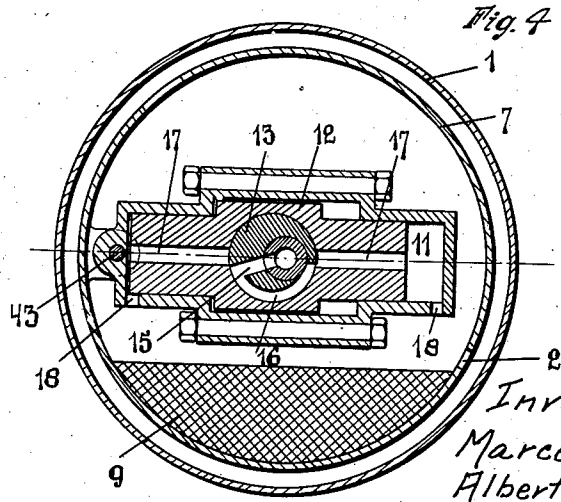

Fig. 4

Inventors
Marcel Audiffren
Albert Singrun
By C. F. Wenderoth
Atty

Dec. 6, 1932. M. AUDIFFREN ET AL 1,889,817

ROTARY REFRIGERATING MACHINE

Filed Oct. 23, 1928 3 Sheets-Sheet 3

Fig. 5

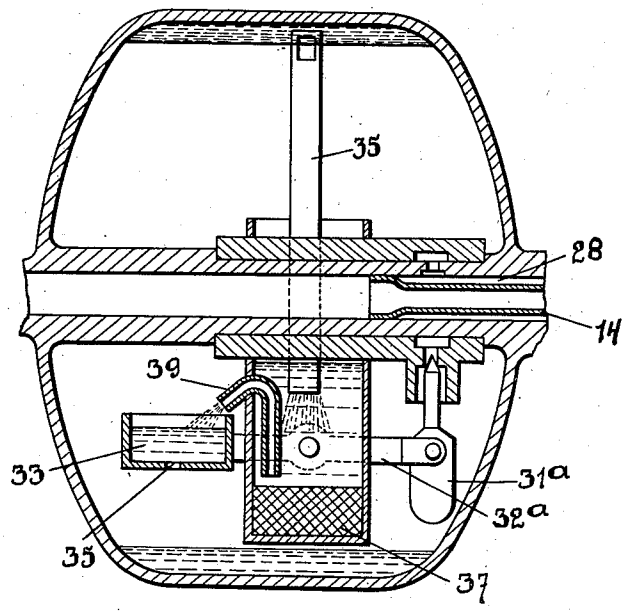

Fig. 6

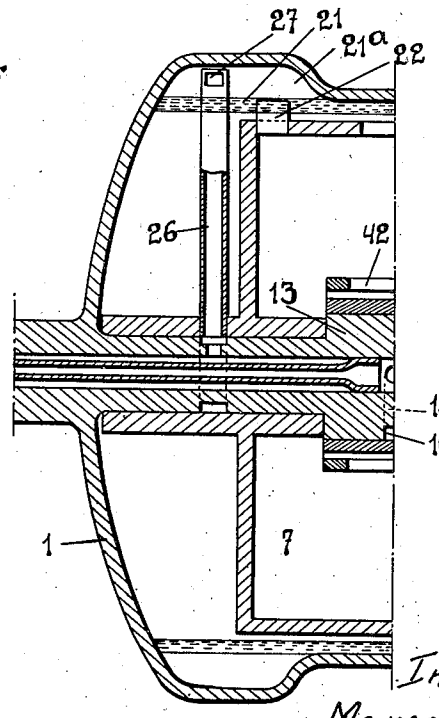

Inventors
Marcel Audiffren
Albert Singrun
By E. F. Wenderoth
Atty.

Patented Dec. 6, 1932 1,889,817

UNITED STATES PATENT OFFICE

MARCEL AUDIFFREN, OF CANNES, AND ALBERT SINGRÜN, OF EPINAL, FRANCE

ROTARY REFRIGERATING MACHINE

Application filed October 23, 1928, Serial No. 314,508, and in France October 28, 1927.

Our invention relates to a refrigerating machine of the rotary type and in which is provided a rotor providing two closed chambers, connected together by a common hollow arbor, one of said chambers acting as a refrigerating chamber in which evaporation of a liquefied gas takes place, whereas the other acts as a condenser and includes a compressor through the action of which the gas is again liquefied.

In the known machines of the same type, the gas coming from the evaporator reaches the condenser by using a passage of the hollow shaft and reaches the compressor only after having circulated for a longer or shorter time in contact with the hot portions thereof.

It follows that the temperature of the gas rises and that it expands before reaching the compressor, so that the weight of gas drawn in and compressed by each cylinder is much less than if the gas were kept colder. This is manifested by a reduction of the output of the machine.

In accordance with our invention, these disadvantages are avoided due to the fact that the gas passes from the hollow shaft to the compressor through a passage formed in an eccentric or the equivalent which directly operates the compressor and which controls the intake parts thereof. Due to this arrangement the gas no longer needs to traverse more than a short path to reach the compressor, and during this travel, it is no longer exposed to the heating effects mentioned above, so that the output of the machine is improved.

When the gas has been liquefied in the condenser by the action of the compressor, it is mixed with the lubricating oil which cannot be separated completely enough by the usual means, which consists in decanting the mixture into a stationary receptacle located within the condenser.

In our machine this separation is effected very efficiently, or more or less completely after decanting, by a centrifuging of the gas contaminated with oil in a rotating and cooled compartment of the condenser. The mixture of oil and liquefied gas form a ring against the internal periphery of this compartment due to the effect of centrifugal force, and this same force separates the said ring into two layers, an external layer of pure liquefied gas and an internal layer of oil.

Into the layer of liquefied gas plunges a stationary tube, through which the liquefied gas traverses the layer of oil and passes to a passage in the hollow shaft to return to the refrigerator. The return of the liquefied gas towards the refrigerator is controlled by a valve placed under the control of a leakage cup in which collects the liquefied gas returned to the refrigerator. The regulating arrangement thus formed has a great sensitiveness and assures constancy of the thickness of the ring of centrifuged liquid, which condition is essential in order that separation by centrifuging may be accomplished by the means stated.

Other details of our machine will appear in the course of the following specification.

The invention will be more readily understood by those skilled in the art with reference to the accompanying drawings forming part of this specification, and in which—

Figure 1 is a vertical section of the machine;

Figure 2 is a transverse section along line 2—2 of Figure 1;

Figure 3 is a transverse section along the line 3—3 of Figure 1;

Fig. 4 is a view similar to Fig. 3 of a modification;

Fig. 5 is a view similar to Fig. 1 of a modification; and

Fig. 6 is a partial sectional detail, corresponding to Fig. 1 and relating to a modification thereof.

Adverting to the drawings more in detail, the condenser 1 is connected to the refrigerator or evaporator 2 by a motor arbor 3 which is hollow throughout or through a part at least of its length. The arbor 3 is of a single piece, traverses the condenser and refrigerator and turns with them in a plurality of bearings 4, 5, whose number are varied to suit the conditions and arrangement of parts, two having been shown by way of example.

In the condenser is suspended loosely on the arbor 3, a frame or housing 7, filled with oil and provided with a decantation chamber 8, balanced by a counterweight 9 (Fig. 3) which encloses a compressor of the single acting type connected in tandem shown generally at 10 and comprising two cylinders 11 and two pistons 12. The block closed by the end-to-end union of the two cylinders has between the latter a circular seat serving as a collar for an eccentric 13. The said eccentric forms a rotary admission and distribution valve for the gas drawn in by the compressor, in the refrigerator, through the interior of the central tube 14 whose two extremities are shrunk or otherwise mounted in the inner walls of the hollow arbor. For this purpose the said eccentric is provided with a passageway 15 adapted to connect the periphery thereof with the channel of the hollow arbor and a groove 16 extending through only a part of the circumference of the eccentric.

By reason of this arrangement, the gas drawn through the interior of the central tube is no longer in contact with the conduits and the warm parts of the housing, as in machines known in the art, and therefore no longer expands.

After a short course it penetrates in the cylinders 11 through a hole 17 provided in the cylinder heads thereof, which after having compressed it, pushes it through a hole 18 and an ordinary spring blade sniffing valve 19. The gas first becomes cooled, condenses, and liquefies against the cold wall of the condenser, mixed with the oil, and continually flows through a hole 20 provided in the bottom of the casing.

Said mixture forms on the wall of the rotating condenser, a first liquid ring 21, in which is plunged a fixed scraper 22, which sends it back into the decantation chamber 8, where a first separation of liquids at rest, by reason of their difference in density. The oil, which floats, returns to the casing through a hole 23, while the liquid refrigerant, instead of accumulating as usual in a stationary compartment of the housing, flows through a fixed tube 24, to the rear of a partition 25.

Said partition 25 forms with one of the heads of the condenser a rotating chamber in which forms a second liquid ring, which undergoes a second cooling, as well as a new and energetic separation of oil by centrifugal force. The oil being less dense than the liquefied gas accumulates at the center of said liquid ring and empties into the condenser through the central orifice of the partition 25.

In said second liquid ring plunges a fixed collector tube 26 whose upper part is situated in the zone of purified liquefied gas and presents an orifice 27 through which said liquid, in rotation and under pressure, is driven into the annular space 28, constantly full of returning liquid during running of the machine, which surrounds the central tube 14. Said space only connects with the condenser through the collector tube 26 and with the refrigerator only through the tube 30 through which return of the liquid towards the refrigerator takes place.

In some cases I may arrange the parts described thus far as shown in Fig. 6. As therein shown, the collector tube 26 gathers the liquefied gas directly in an enlargement 21^a of the liquid ring 21, formed by enlarging the wall of the condenser, in which enlargement, all the liquid refrigerant accumulates after being separated from the oil by centrifugal force in conjunction with the difference in density, the admission orifice 27 of the fixed collector tube 26 being situated further out than the scraper 22 and can only therefore pick up liquefied gas, whereas the scraper 22 can only collect oil.

In either of the above cases, the liquid during its course of travel through the annular space undergoes, before its return to the refrigerator, a third and last cooling, by contact with the hollow arbor, at the portion nearest the refrigerator, which portion is always cold from the conductible properties thereof.

According to Fig. 1, the automatic regulator (auto-expansion apparatus) is arranged in the evaporator. It comprises substantially a delivery pipe 30 for the liquid refrigerant. This pipe rotates or turns with the evaporator. It is connected with the annular space 28 which, in the hollow shaft, encompasses the pipe 14 and which is on the other hand in communication with the fixed pipe 26 of the condenser.

The end of pipe 30 carries a sliding head 31, perforated along its axis with a passage which is extended by a pipe 45. This pipe is immersed constantly in the ring which the liquefied gas forms in the evaporator. This prevents any projection of liquefied gas into the gaseous medium of the evaporator.

A sliding rod 42 is contained in the pipe 30. It is guided therein by the studs 43 and by its enlarged head, on which the head 31 rests.

This head is perforated with passages 44, connecting the central perforation of head 31 and hence pipe 45 with the free space around rod 42 in pipe 30. The result is that when the head 31 is raised rod 42 leaves its seat and permits the passage of the liquefied gas, which flows into the evaporator through the space encompassing rod 42, passages 44 and the pipe 45.

The mass 31 and the pointed rod, which are subjected to the action of centrifugal force, are connected by a stirrup 32 to a cup 33, sliding along a guide with stops 34, diametrically opposed to the pipe 30. The said cup is provided at the bottom with a hole 35.

The weight of the mass 31 and that of the

cup are so chosen that the mass is heavier than the empty cup, whereas, on the contrary, the weight of the cup full of liquid refrigerant is greater than that of the mass.

The cup 33 is fed by a tube 36, which is stationary and performs the office of a scraper in the ring of liquefied gas which forms in the rotating refrigerator. The tube 36 leads the liquefied gas into a collecting receptacle 37, loosely mounted on the hollow arbor and counterbalanced in such a way as not to turn with the rotor. From said receptacle, the liquid falls either through a spout or a pipe 39, into an eccentric trough 40, from which it is expulsed by centrifugal force. It escapes through the opening 41 and falls into cup 33 during the whole period of rotation.

In certain cases the refrigerant might be fed directly into the eccentric trough, without passing through the medium of receptacle 37, by disposing the tube 36 in such wise that it is fixed in the liquid in rotation, by a suitable balancing arrangement.

In any case, when the mass 31 has allowed too much liquid refrigerant to pass, the scraper 36 leads such excess liquid into the cup 33 whose weight becomes predominant and under the action of centrifugal force causes the mass 31 to diminish, or even stops completely, the afflux of liquefied gas coming from the condenser.

If, on the contrary, said liquefied gas arrives in too small quantity, the contents of the cup no longer counter-balances the action of mass 31 and allows it to predominate in order to disengage the outlet of the return pipe of the liquefied gas.

In practice, there is furthermore established automatically a running range proportioning exactly the section of the return orifice of the liquefied gas with the production of the machine, thus regulating with precision the cycle of circulation of gases and liquids.

Upon stopping of the machine, the cup 33 empties completely through the hole 35, and by reason of the under pressure existing in the condenser and of the cessation of centrifugal force, the mass 31 slides freely on the tube 30 and disengages the orifice thereof. Equilibrium therefore becomes established automatically between the two chambers constituting the refrigerator and the condenser.

Referring to Fig. 5, the automatic expanding regulator does not turn with the hollow arbor but is fixed on the stationary collecting receptacle 37. The cup 33, whose bottom is provided with the outlet hole 35, is placed beneath the discharge orifice of tube or spout 39, at the extremity of a rocker arm 32*a*. Said rocker arm, which is pivoted on 37, carries at its opposite extremity, a mass 31*a* which carries a pointed rod regulating the flow orifice of the liquefied gas in the refrigerator.

The compressor 10 described in connection with Figs. 1 and 3 is composed of two cylinders connected in tandem which are subjected to the action of the control eccentric, whereas the pistons 12, connected together by braces 42, form an assembly which oscillates about a shaft 43^a of casing 7. The two cylinders can furthermore be cast in a single piece or assembled after casting.

Referring to Fig. 4, there is therein shown an embodiment in which the pistons 12 become displaced under the action of eccentric 13 in cylinders 11, accordingly assembled and the whole of which is articulated on the shaft 43^a.

In machines now in use, the housing suspended on the motor arbor undergoes, during the irregular work of compressing the gas, in spite of its counter-balancing weights and the disposition of the cylinders, a rocking which is extremely detrimental to the output, which rocking is due, firstly, to the neutral point of the cylinders during which the counter-balancing weights tend to fall a certain distance, and subsequently to the irregularity of the quantity of gas which is then retained by the cylinders at each revolution. This rocking can continue, by accumulated oscillations, up to the point of driving the counterbalancing weights in the rotation of the apparatus.

In order to overcome these disadvantages and to insure stability of the counter-balancing weights and the invariability of the quantity of gas retained in the cylinders at each compression we add to the housing 7 an inertia stabilizing flywheel 44^a loosely mounted either on the hub 45^a of said housing as shown or even on the motor arbor. Said flywheel is of suitable weight and constitutes with its rim an inertia mass which does not become displaced until it is set in motion by an exterior force independent thereof. In said flywheel is provided a notch or groove 46 which is penetrated by one or more lugs or fingers 47, of rigid or elastic character, which are fixed to the housing. These elements are disposed in a way so as to leave a certain amount of play between the flywheel and the casing in the direction of rotation.

A flywheel 44^b analogous to 44^a is preferably disposed in the refrigerator near the counter balanced member 37 to damp out the oscillations thereof.

As soon as a rocking of the housing or the counterbalanced member 37 takes place, the lug which it carries abuts against the extremity of the groove and the inertia of the flywheel by opposing amplification of such rocking immediately reestablishes complete stability at the first contact or after a very small number of decreasing oscillations.

Our improved rotary refrigerating machine, as hereinbefore described, is remarkable for its regularity of operation, its stabil-

ity, its simplicity, its safety in operation and its output with respect to machines now known in the art.

While we have disclosed what we deem to be the preferred forms of our device, we do not wish to be limited thereto as there might be many changes made in the construction and arrangement of parts without departing from the spirit of our invention as comprehended within the scope of the appended claims.

Having described our invention what we claim as new and desire to secure by Letters Patent is:

1. In a rotary refrigerating machine of the type described, a condenser, an evaporator, a hollow shaft common to both said condenser and evaporator, a pendulous weighted crankcase mounted upon the hollow shaft in the condenser, a compressor carried by the crankcase, an eccentric upon the hollow shaft for directly driving the compressor, said eccentric having a passage in cooperative relation with the evaporator through the interior of the hollow shaft and periodically presenting its discharge opening to the intake ports of the compressor.

2. In a rotary refrigerating machine of the type described, a condenser, an evaporator, a hollow shaft common to both said condenser and evaporator, a pendulous weighted crankcase mounted upon the hollow shaft in the condenser, a compressor pivoted to the said crankcase by a single shaft, an eccentric upon the hollow shaft to directly drive the compressor, said eccentric having a passage in cooperative relation with the evaporator through the interior of the hollow shaft and periodically presenting its discharge opening to the intake ports of the compressor.

3. In a rotary refrigerating machine of the type described, a condenser, an evaporator, a hollow shaft common to both said condenser and evaporator, a pendulous weighted crankcase providing a bath of oil mounted upon the hollow shaft in the condenser, a compressor in the crankcase, an element on the hollow shaft to drive the said compressor, means for separating the liquefied gas and the oil by centrifuging in the condenser, said hollow shaft having a passage for the return of the purified liquefied gas towards the evaporator, a valve in the latter passage, a leakage cup whereinto the liquefied returned gas to the evaporator flows, and means for providing cooperation between this cup and the said valve.

4. In a rotary refrigerating machine of the type described, a condenser, an evaporator, a hollow shaft common to both said condenser and evaporator, a pendulous weighted crankcase providing a bath of oil mounted upon the hollow shaft in the condenser, a compressor in the crankcase, an element on the hollow shaft to drive the said compressor, a circumferential compartment in the condenser, said hollow shaft having a passage for the passage of the liquefied gas, a stationary tube transverse to the hollow shaft and communicating with this passage while opening at its free end into the said compartment, a valve in the passage for the liquefied gas, a leakage cup whereinto enters the liquefied gas flowing to the evaporator and means providing cooperation between this cup and the said valve.

5. In a rotary refrigerating machine of the type described, a condenser, an evaporator, a hollow shaft common to both said condenser and evaporator, a pendulous weighted crankcase providing a bath of oil mounted upon the hollow shaft in the condenser, a compressor in the crankcase, an element on the hollow shaft to drive the said compressor, means for separating the liquefied gas and the oil by centrifuging in the condenser, said hollow shaft having a passage for the flow of the liquefied purified gas towards the evaporator, a valve at the discharge end of this latter passage, a pendulous weighted receptacle mounted upon the hollow shaft in the evaporator, a stationary radial tube opening, on the one hand, into the said pendulous receptacle and, on the other hand, toward the internal circumference of the evaporator, an overflow means for the said vessel, a leakage cup fed by the said overflow, and means for providing cooperation between the said cup and the said valve.

6. In a rotary refrigerating machine of the type described, a condenser, an evaporator, a hollow shaft common to both said condenser and evaporator, a pendulous weighted crankcase providing a bath of oil mounted upon the hollow shaft in the condenser, a compressor in the crankcase, an element on the hollow shaft to drive the said compressor, means for separating the liquefied gas and the oil by centrifuging in the condenser, said hollow shaft having a passage for the flow of the liquefied purified gas towards the evaporator, a valve at the discharge end of this latter passage, a radial tube turning with the hollow shaft and extending this same passage up to the circumference of the evaporator, a pendulous weighted receptacle mounted upon the hollow shaft in the evaporator, a stationary radial tube opening, on the one hand, into the said receptacle and, on the other hand, toward the internal circumference of the evaporator, an overflow for the said receptacle, a circular trough fed by this overflow, said circular trough having a discharge orifice at the circumference thereof, a leakage cup placed opposite this orifice, a radial support integral with the hollow shaft to guide the said cup and means for securing it to the valve.

7. In a rotary refrigerating machine of the type described, a condenser, an evaporator,

a hollow shaft common to both said condenser and evaporator, a pendulous crankcase mounted upon the hollow shaft in the condenser and providing a bath of oil, a compressor in this crankcase, an eccentric upon the hollow shaft to directly drive the compressor, said element having a passage in cooperative relation with the evaporator through the interior of the hollow shaft and periodically presenting its discharge orifice in front of the intake ports of the compressor, the crankcase of the compressor having a compartment, a scraper projecting toward the internal circumference of the condenser, an overflow and an intermediate emptying tube for the said compartment, the rotary portion of the condenser having a compartment, wherein opens the said intermediate discharge tube, said hollow shaft having a passage for the flow of the liquefied gas, a stationary radial tube which communicates with this passage and opens at its free end into the said compartment, a valve in the passage for the liquefied gas, a leakage cup whereinto pours the liquefied gas returning to the evaporator and means for cooperatively connecting this cup to the said valve.

8. In a rotary refrigerating machine of the type described, a condenser, an evaporator, a hollow shaft common to both said condenser and evaporator, a pendulous weighted crankcase mounted upon the hollow shaft in the condenser, a compressor carried by this crankcase, an element upon the hollow shaft to drive the said compressor, a mass centered upon the hollow shaft and not capable of being driven thereby, and means connecting said mass to the crankcase with a certain amount of play in the direction of its rotation.

9. In a rotary refrigerating machine of the type described, a condenser, an evaporator, a hollow shaft common to both said condenser and evaporator, a pendulous weighted crankcase mounted upon the hollow shaft in the condenser, a compressor upon the crankcase, a pendulous vessel carried by the hollow shaft in the evaporator, a mass centered upon the hollow shaft near said weighted crank case and not capable of being driven by said shaft, a mass centered upon said hollow shaft near said pendulous vessel and not capable of being driven by said shaft, and means connecting the said mass to said vessel with a certain amount of play in the direction of rotation.

In testimony whereof we hereunto affix our signatures.

MARCEL AUDIFFREN.
ALBERT SINGRÜN.